## APPENDIX A. PLANS, SECTIONS, AND RENDERINGS OF PROPOSED UNDERTAKING

# TRIUMPHAL ARCH
# WASHINGTON, DISTRICT OF COLUMBIA

DISCLAIMER: RENDERINGS ARE FOR ILLUSTRATION PURPOSES ONLY AND MAY NOT REFLECT THE FINAL DESIGN.

## SITE LOCATION MAP

MEMORIAL CIRCLE
COLUMBIA ISLAND,
WASHINGTON, DISTRICT OF COLUMBIA

## DRAWING INDEX

### ARCHITECTURAL


| | |
|---|---|
| A-1.00 | COVER SHEET |
| A-2.00 | GROUND LEVEL FLOOR PLAN |
| A-2.01 | GROUND LEVEL MECHANICAL REFLECTED CEILING PLAN |
| A-2.10 | LOWER MEZZANINE FLOOR PLAN |
| A-2.30 | UPPER MEZZANINE FLOOR PLAN |
| A-2.40 | OBSERVATION DECK LEVEL FLOOR PLAN |
| A-2.41 | OBSERVATION DECK LEVEL REFLECTED CEILING PLAN |
| A-3.00 | FRONT ELEVATION |
| A-3.10 | SIDE ELEVATION |
| A-3.20 | REAR ELEVATION |
| A-3.30 | SIDE ELEVATION |
| A-4.00 | BUILDING SECTION |
| A-4.10 | BUILDING SECTIONS |


### CIVIL


| | |
|---|---|
| CD101 | DEMOLITION AND SITE PREPARATION PLAN |
| CG101 | GRADING PLAN |
| CG102 | DRAINAGE PLAN |
| CS101 | SITE PLAN |
| CU101 | UTILITY PLAN |



HARRISON DESIGN

1010 Wisconsin Avenue NW,
Suite 835
Washington, DC 20007
(202) 733-1479
harrisondesign.com



All drawings are the property of Harrison Design Associates, Inc. and must be returned at the completion of work. These shall not be reproduced, modified, or revised in any way without the written consent from, and proper compensation to, Harrison Design. The contractor shall check and verify all dimensions and report any discrepancies to Harrison Design before proceeding with the work. Harrison Design shall protect this right and be reimbursed for all legal and court costs, etc., for any necessary protection of the drawings. Submission of these drawings to any public body for any use does not release, in any way, the copyright and ownership of drawings provisions listed herein.


TRIUMPHAL ARCH - WASHINGTON, DC

WASHINGTON, DC

stamps

issue

date 05-25-2026

scale NTS

drawn JG, KA checked NC

project no. 266206

title COVER SHEET

sheet number A-1.00

NOT RELEASED FOR CONSTRUCTION


NOT RELEASED FOR CONSTRUCTION


V:\Projects\St Thomas Catholic Church\266206 A100 - Cover Sheet.dwg May 26, 2026 - 10:50am

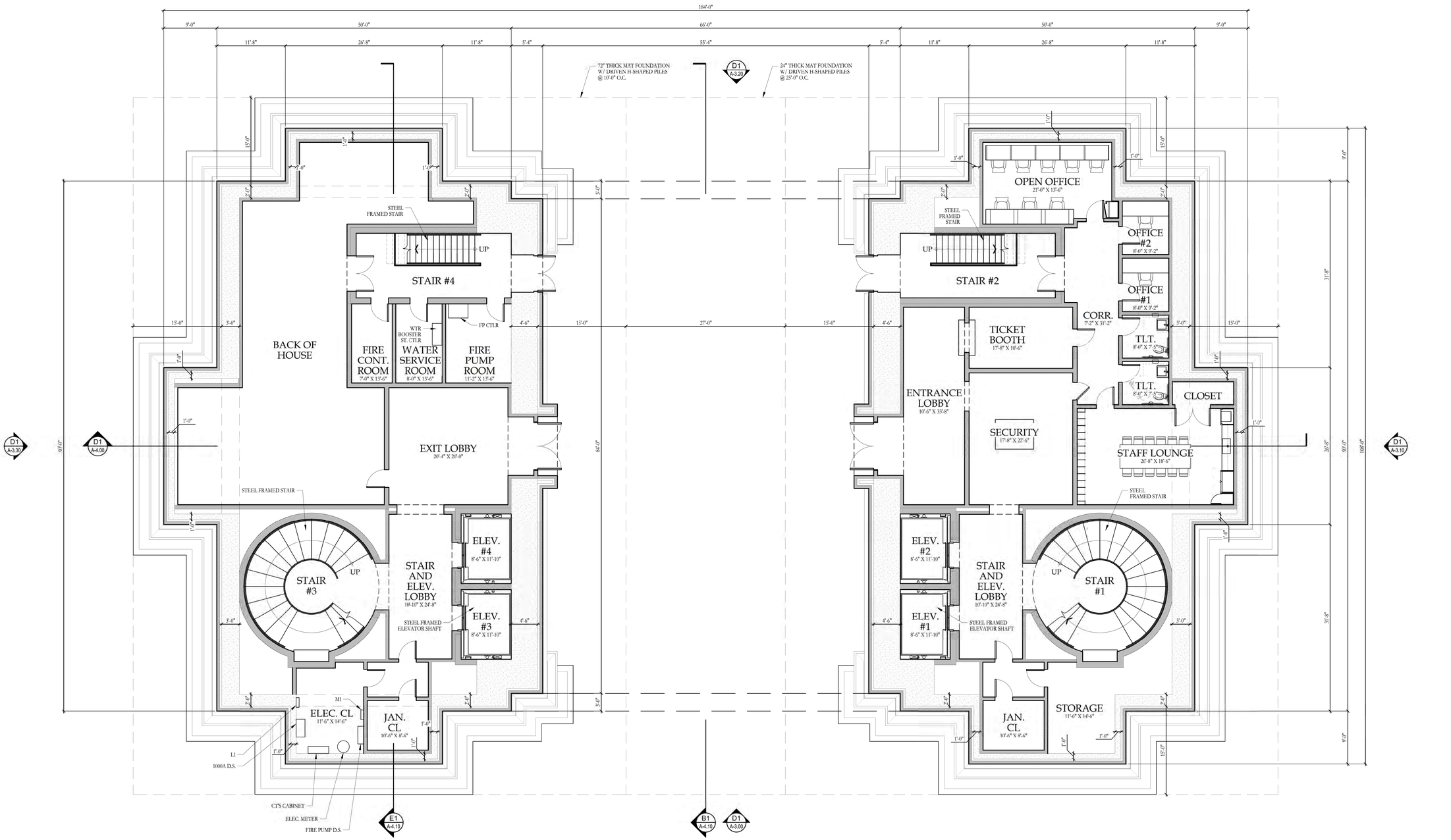


B1 A-2.00 GROUND LEVEL FLOOR PLAN
SCALE: 1/8" = 1'-0"

N

RELEASED FOR CONSTRUCTION

HARRISON DESIGN
1010 Wisconsin Avenue NW,
Suite 835
Washington, DC 20007
(202) 733-1479
harrisondesign.com

All drawings are the property of Harrison Design Associates, Inc. and must be returned at the completion of work. These shall not be reproduced, modified, or revised in any way without the written consent from, and proper compensation to, Harrison Design. The contractor shall check and verify all dimensions and report any discrepancies to Harrison Design before proceeding with the work. Harrison Design shall protect this right and be reimbursed for all legal and court costs, etc., for any necessary protection of the drawings. Submission of these drawings to any public body for any use does not release, in any way, the copyright and ownership of drawings provisions listed herein.

TRIUMPHAL ARCH - WASHINGTON, DC

WASHINGTON, DC

stamps

issue

date 05-25-2026
scale 1/8" = 1'-0"
drawn JG, KA checked NC
project no. 266206
title GROUND LEVEL FLOOR PLAN
sheet number A-2.00

V:\Projects\St Therese Catholic Church\266206 A200 - Floor Plans.dwg May 26, 2026 - 10:55am

RELEASED FOR CONSTRUCTION

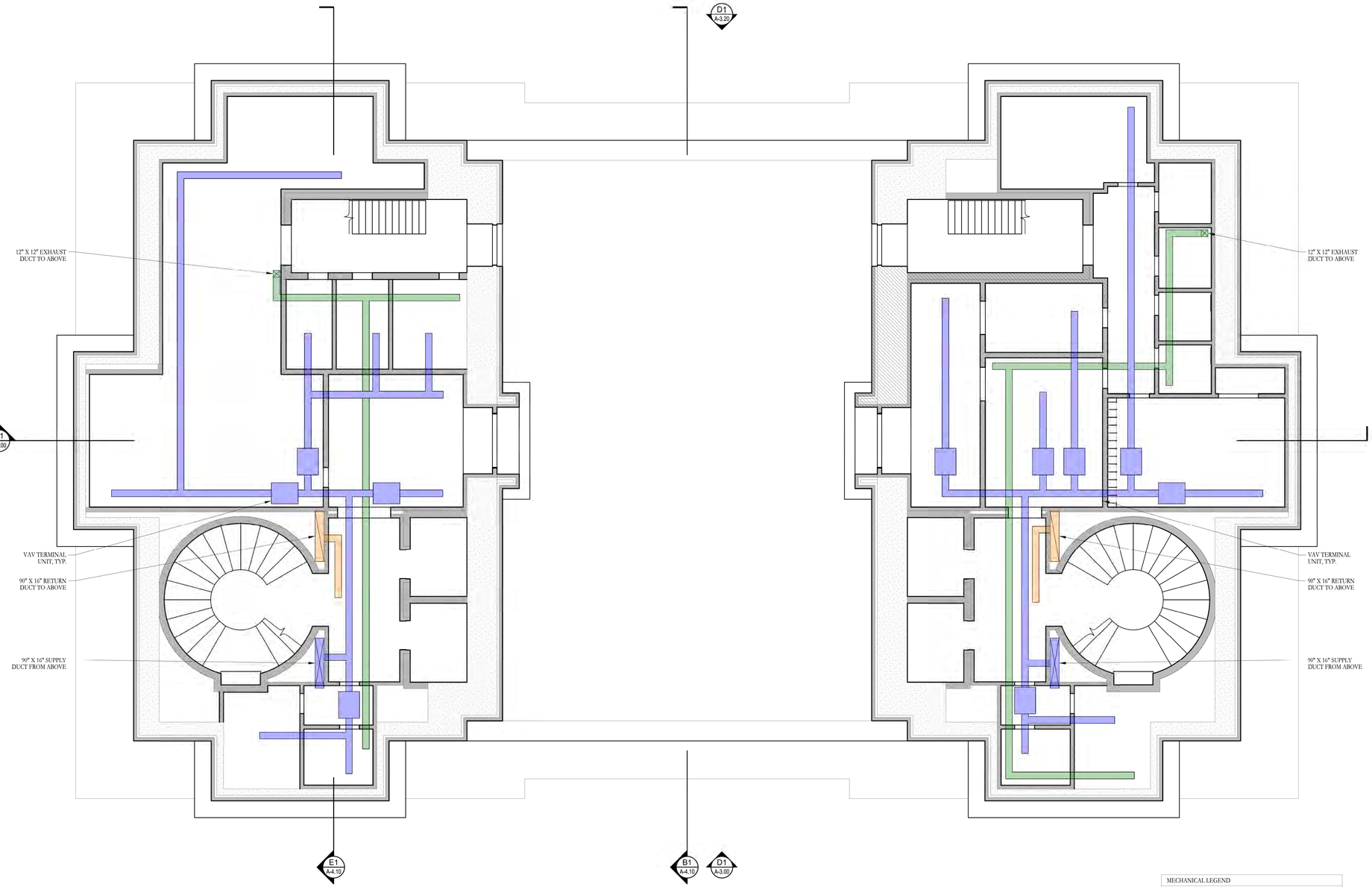


MECHANICAL LEGEND

- SUPPLY AIR
- RETURN / RELIEF AIR
- EXHAUST AIR
- DUCT RISER

B1 / A-2.00 GROUND LEVEL REFLECTED CEILING PLAN
SCALE: 1/8" = 1'=0"

N

RELEASED FOR CONSTRUCTION

HARRISON DESIGN
1010 Wisconsin Avenue NW,
Suite 835
Washington, DC 20007
(202) 733-1479
harrisondesign.com

All drawings are the property of Harrison Design Associates, Inc. and must be returned at the completion of work. These shall not be reproduced, modified, or revised in any way without the written consent from, and proper compensation to, Harrison Design. The contractor shall check and verify all dimensions and report any discrepancies to Harrison Design before proceeding with the work. Harrison Design shall protect this right and be reimbursed for all legal and court costs, etc., for any necessary protection of the drawings. Submission of these drawings to any public body for any use does not release, in any way, the copyright and ownership of drawings provisions listed herein.

TRIUMPHAL ARCH - WASHINGTON, DC

WASHINGTON, DC

stamps

issue

| | |
|---|---|
| date | 05-25-2026 |
| scale | 1/8" = 1'-0" |
| drawn | JG, KA |
| checked | NC |
| project no. | 266206 |
| title | GROUND LEVEL MECHANICAL REFLECTED CEILING PLAN |
| sheet number | A-2.01 |

V:\Projects\St Therese Catholic Church\266206 A200 - Floor Plans.dwg May 26, 2026 - 10:06am

RELEASED FOR CONSTRUCTION

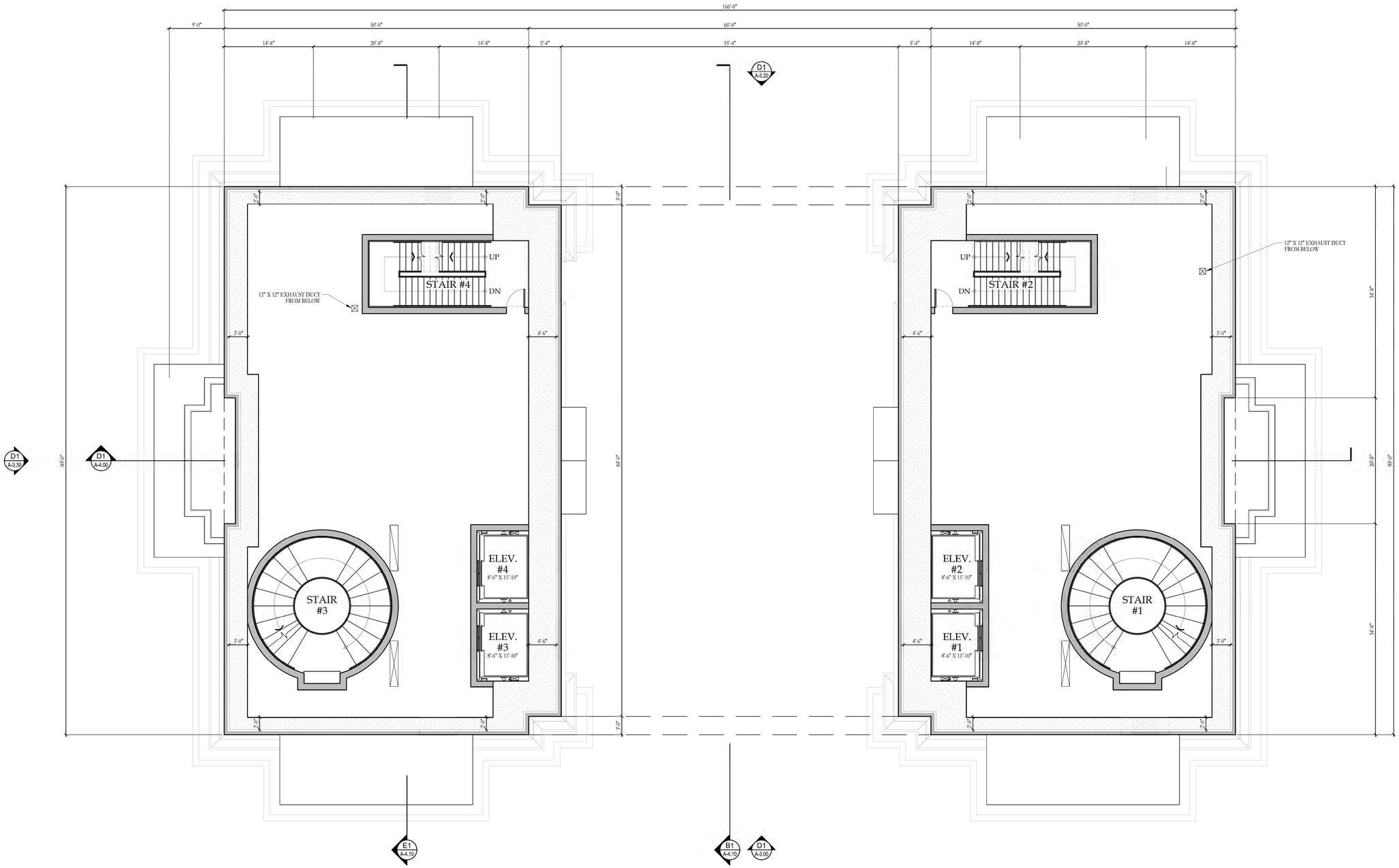


B1
A-2.10
LOWER MEZZANINE FLOOR PLAN
SCALE: 1/8" = 1'=0"

N

RELEASED FOR CONSTRUCTION

HARRISON DESIGN
1010 Wisconsin Avenue NW,
Suite 835
Washington, DC 20007
(202) 733-1479
harrisondesign.com

All drawings are the property of Harrison Design Associates, Inc. and must be returned at the completion of work. These shall not be reproduced, modified, or revised in any way without the written consent from, and proper compensation to, Harrison Design. The contractor shall check and verify all dimensions and report any discrepancies to Harrison Design before proceeding with the work. Harrison Design shall protect this right and be reimbursed for all legal and court costs, etc., for any necessary protection of the drawings. Submission of these drawings to any public body for any use does not release, in any way, the copyright and ownership of drawings provisions listed herein.

TRIUMPHAL ARCH - WASHINGTON, DC

WASHINGTON, DC

stamps

issue

date 05-25-2026
scale 1/8" = 1'-0"
drawn JG, KA checked NC
project no. 266206
title LOWER MEZZANINE FLOOR PLAN
sheet number A-2.10

V:\Projects\St Therese Catholic Church\266206 A2\0- Floor Plans.dwg May 26, 2026 - 10:05am

RELEASED FOR CONSTRUCTION

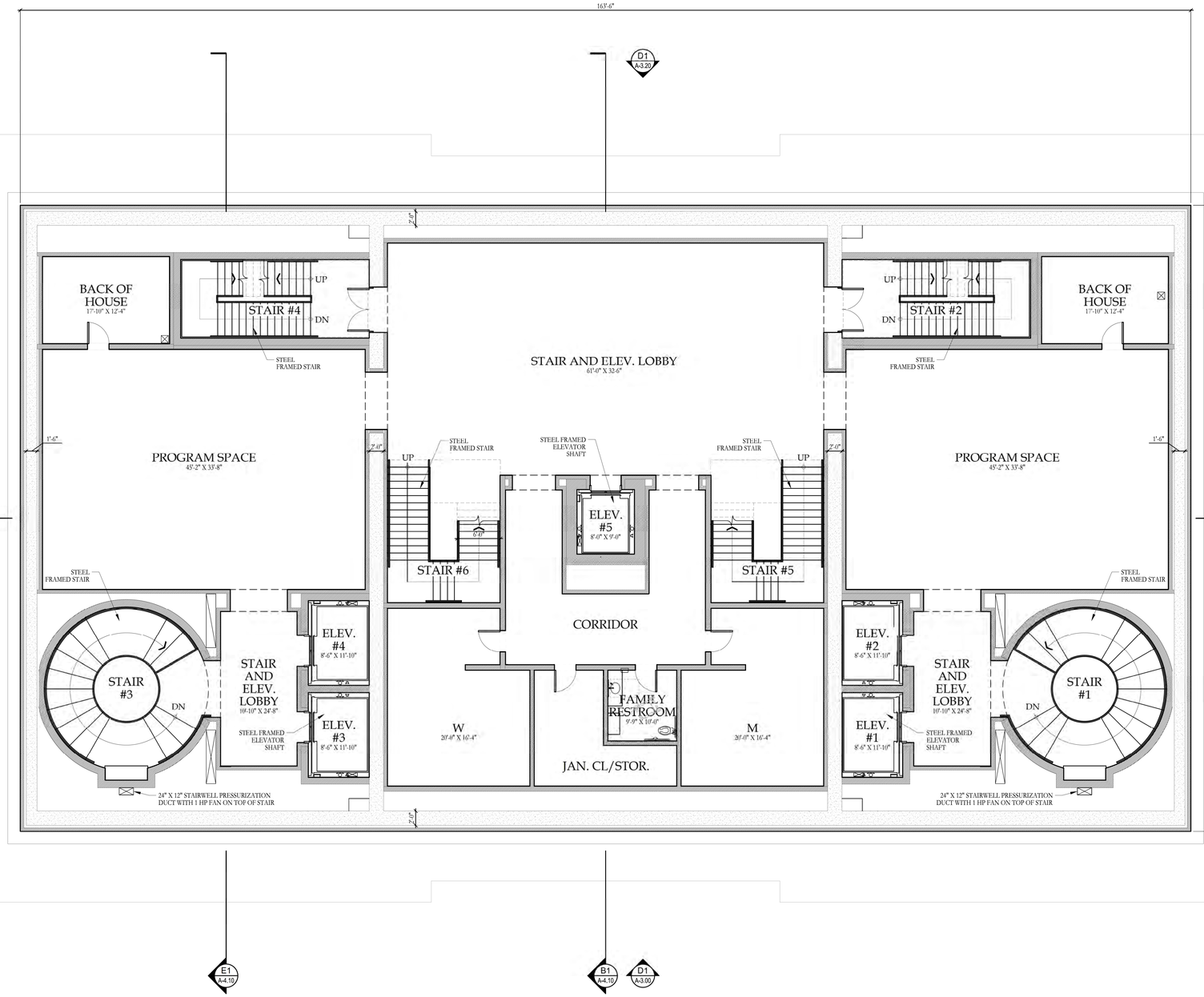


B1 / A-2.20 GALLERY LEVEL FLOOR PLAN
SCALE: 1/8" = 1'=0"

N

RELEASED FOR CONSTRUCTION

HARRISON DESIGN
1010 Wisconsin Avenue NW,
Suite 835
Washington, DC 20007
(202) 733-1479
harrisondesign.com

All drawings are the property of Harrison Design Associates, Inc. and must be returned at the completion of work. These shall not be reproduced, modified, or revised in any way without the written consent from, and proper compensation to, Harrison Design. The contractor shall check and verify all dimensions and report any discrepancies to Harrison Design before proceeding with the work. Harrison Design shall protect this right and be reimbursed for all legal and court costs, etc., for any necessary protection of the drawings. Submission of these drawings to any public body for any use does not release, in any way, the copyright and ownership of drawings provisions listed herein.

TRIUMPHAL ARCH - WASHINGTON, DC

WASHINGTON, DC

stamps

issue

| | |
|---|---|
| date | 05-25-2026 |
| scale | 1/8" = 1'-0" |
| drawn | JG, KA |
| checked | NC |
| project no. | 266206 |
| title | GALLERY LEVEL FLOOR PLAN |
| sheet number | A-2.20 |

V:\Projects\St Therese Catholic Church\266206 A200 - Floor Plans.dwg May 26, 2026 - 10:00am

RELEASED FOR CONSTRUCTION

MECHANICAL LEGEND

- SUPPLY AIR
- RETURN / RELIEF AIR
- EXHAUST AIR
- DUCT RISER

B1 / A-2.30 UPPER MEZZANINE FLOOR PLAN

SCALE: 1/8" = 1'=0"

N

RELEASED FOR CONSTRUCTION

HARRISON DESIGN

1010 Wisconsin Avenue NW,
Suite 835
Washington, DC 20007
(202) 733-1479
harrisondesign.com

All drawings are the property of Harrison Design Associates, Inc. and must be returned at the completion of work. These shall not be reproduced, modified, or revised in any way without the written consent from, and proper compensation to, Harrison Design. The contractor shall check and verify all dimensions and report any discrepancies to Harrison Design before proceeding with the work. Harrison Design shall protect this right and be reimbursed for all legal and court costs, etc., for any necessary protection of the drawings. Submission of these drawings to any public body for any use does not release, in any way, the copyright and ownership of drawings provisions listed herein.

TRIUMPHAL ARCH - WASHINGTON, DC

WASHINGTON, DC

stamps

issue

| | |
|---|---|
| date | 05-25-2026 |
| scale | 1/8" = 1'-0" |
| drawn | JG, KA |
| checked | NC |
| project no. | 266206 |
| title | UPPER MEZZANINE FLOOR PLAN |
| sheet number | A-2.30 |

V:\Projects\St Therese Catholic Church\266206 A200 - Floor Plans.dwg May 26, 2026 - 10:06am

RELEASED FOR CONSTRUCTION

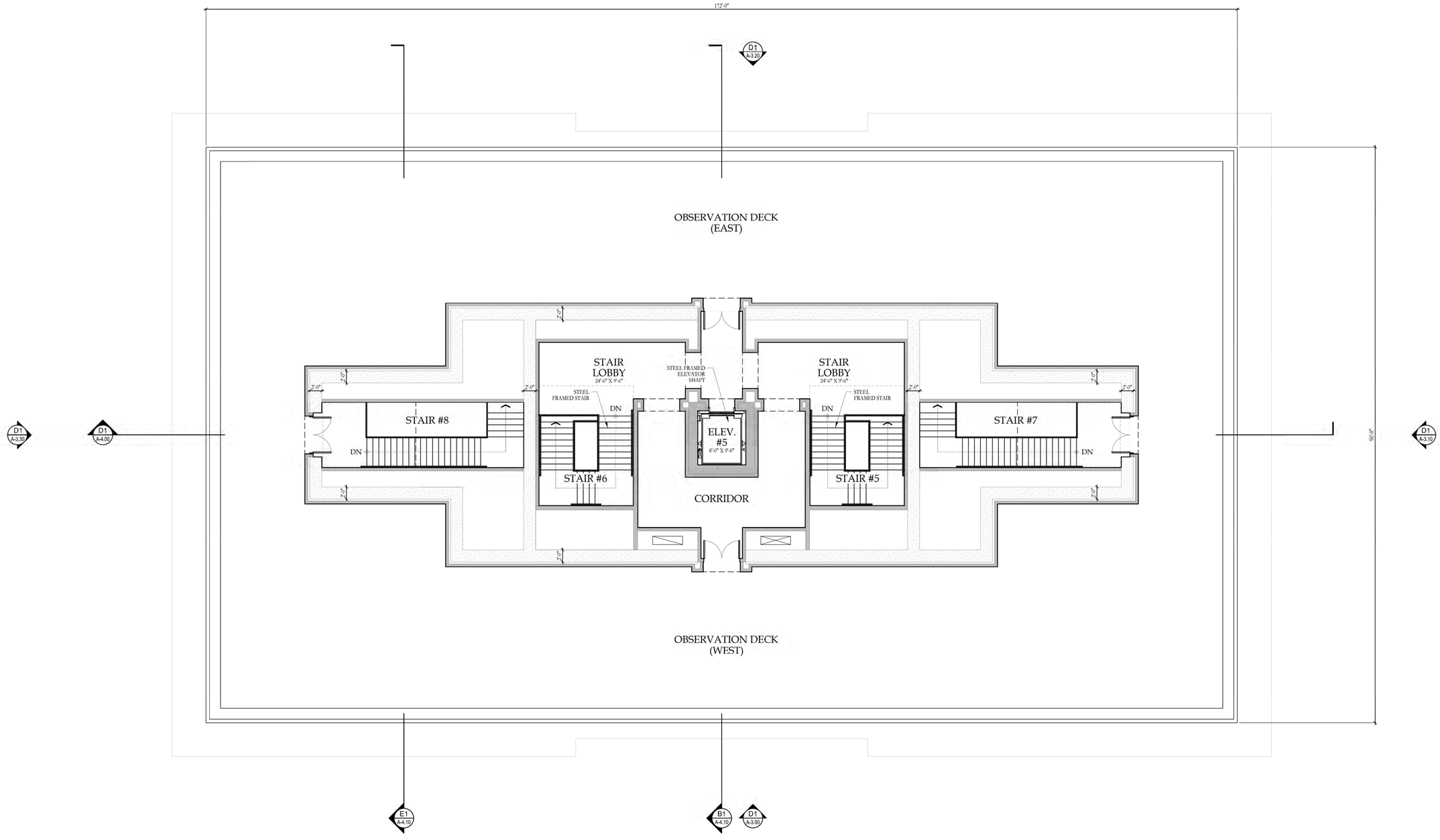


B1
A-2.40
OBSERVATION DECK LEVEL FLOOR PLAN
SCALE: 1/8" = 1'=0"

N

HARRISON DESIGN

1010 Wisconsin Avenue NW,
Suite 835
Washington, DC 20007
(202) 733-1479
harrisondesign.com

All drawings are the property of Harrison Design Associates, Inc. and must be returned at the completion of work. These shall not be reproduced, modified, or revised in any way without the written consent from, and proper compensation to, Harrison Design. The contractor shall check and verify all dimensions and report any discrepancies to Harrison Design before proceeding with the work. Harrison Design shall protect this right and be reimbursed for all legal and court costs, etc., for any necessary protection of the drawings. Submission of these drawings to any public body for any use does not release, in any way, the copyright and ownership of drawings provisions listed herein.

TRIUMPHAL ARCH - WASHINGTON, DC

WASHINGTON, DC

stamps

issue

date 05-25-2026

scale 1/8" = 1'-0"

drawn JG, KA checked NC

project no. 266206

title OBSERVATION DECK LEVEL FLOOR PLAN

sheet number A-2.40

RELEASED FOR CONSTRUCTION

RELEASED FOR CONSTRUCTION

V:\Projects\St Therese Catholic Church\266206 A200 - Floor Plans.dwg May 26, 2026 - 10:06am

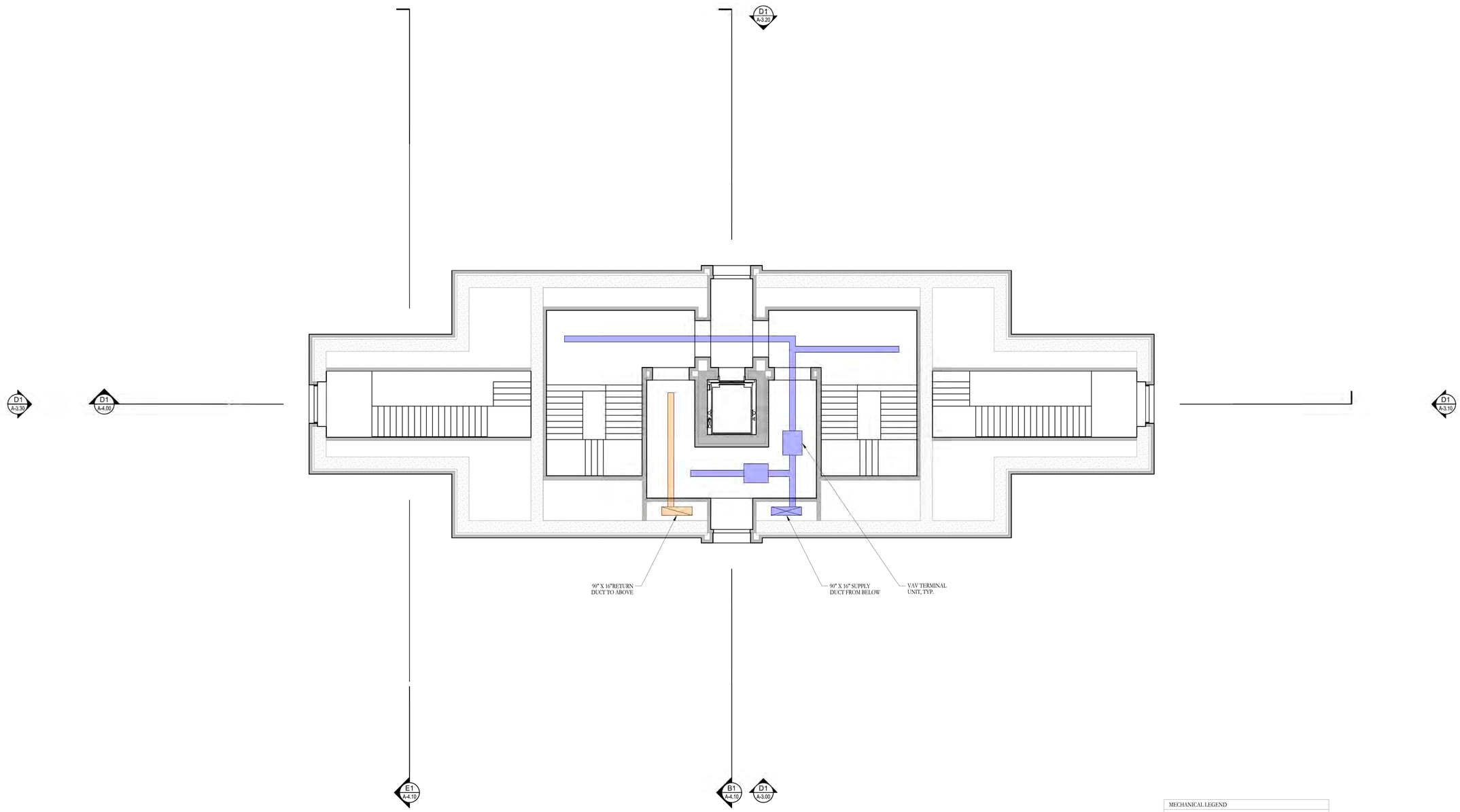


MECHANICAL LEGEND

- SUPPLY AIR
- RETURN / RELIEF AIR
- EXHAUST AIR
- DUCT RISER

B1 / A-2.41 OBSERVATION DECK LEVEL REFLECTED CEILING PLAN

SCALE: 1/8" = 1'-0"

N

RELEASED FOR CONSTRUCTION

HARRISON DESIGN

1010 Wisconsin Avenue NW,
Suite 835
Washington, DC 20007
(202) 733-1479
harrisondesign.com

All drawings are the property of Harrison Design Associates, Inc. and must be returned at the completion of work. These shall not be reproduced, modified, or revised in any way without the written consent from, and proper compensation to, Harrison Design. The contractor shall check and verify all dimensions and report any discrepancies to Harrison Design before proceeding with the work. Harrison Design shall protect this right and be reimbursed for all legal and court costs, etc., for any necessary protection of the drawings. Submission of these drawings to any public body for any use does not release, in any way, the copyright and ownership of drawings provisions listed herein.

TRIUMPHAL ARCH - WASHINGTON, DC

WASHINGTON, DC

stamps

issue

date 05-25-2026

scale 1/8" = 1'-0"

drawn JG, KA checked NC

project no. 266206

title OBSERVATION DECK LEVEL MECHANICAL REFLECTED CEILING PLAN

sheet number A-2.41

V:\Projects\St Therese Catholic Church\266206 A2\20 - Floor Plans.dwg May 26, 2026 - 10:05am

RELEASED FOR CONSTRUCTION

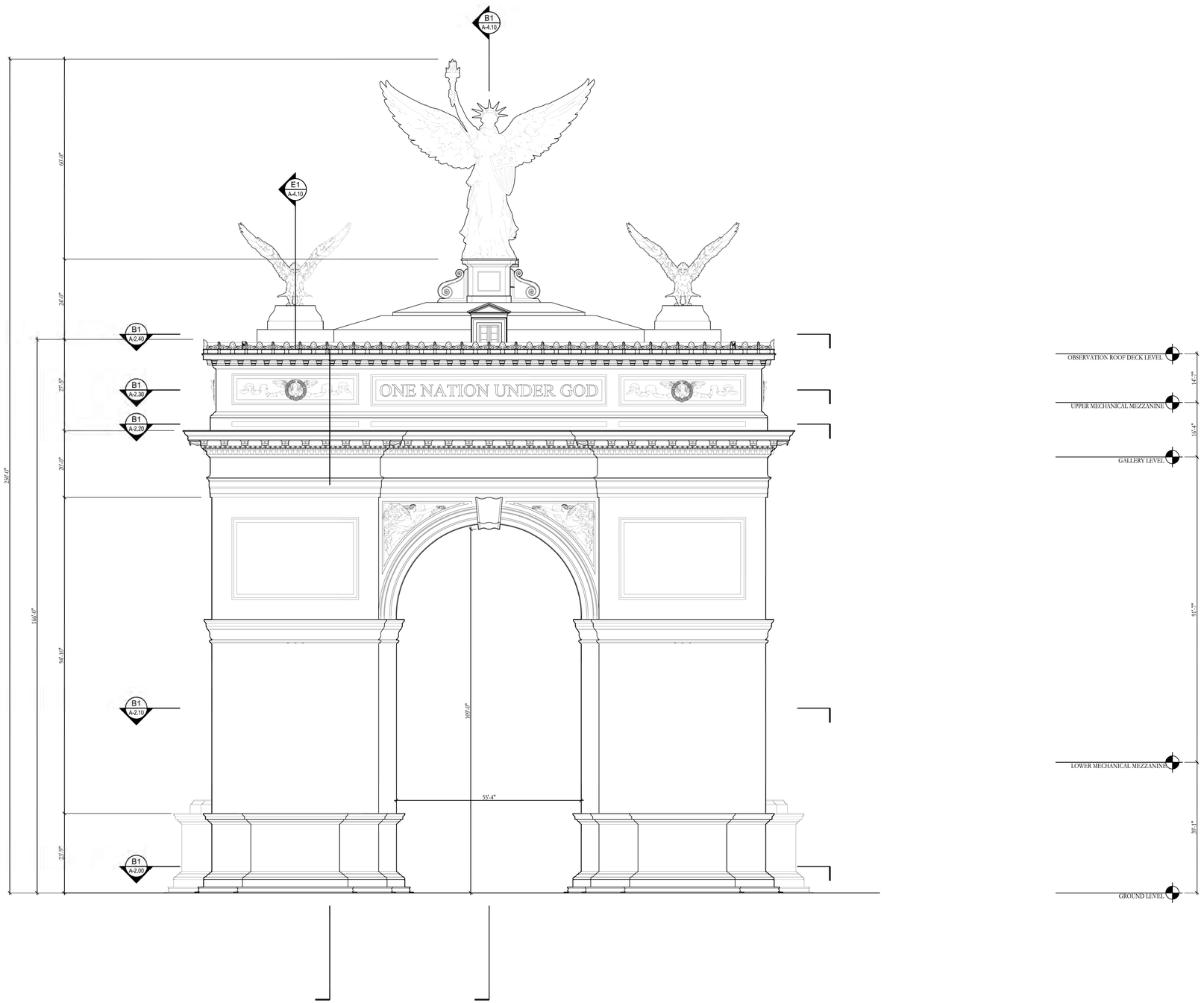


D1
A-3.00
FRONT ELEVATION
SCALE: 1/16" = 1'=0"

RELEASED FOR CONSTRUCTION

HARRISON DESIGN
1010 Wisconsin Avenue NW,
Suite 835
Washington, DC 20007
(202) 733-1479
harrisondesign.com

All drawings are the property of Harrison Design Associates, Inc. and must be returned at the completion of work. These shall not be reproduced, modified, or revised in any way without the written consent from, and proper compensation to, Harrison Design. The contractor shall check and verify all dimensions and report any discrepancies to Harrison Design before proceeding with the work. Harrison Design shall protect this right and be reimbursed for all legal and court costs, etc., for any necessary protection of the drawings. Submission of these drawings to any public body for any use does not release, in any way, the copyright and ownership of drawings provisions listed herein.

# TRIUMPHAL ARCH - WASHINGTON, DC

WASHINGTON, DC

stamps

issue

| | |
|---|---|
| date | 05-25-2026 |
| scale | 1/16" = 1'-0" |
| drawn | JG, KA |
| checked | NC |
| project no. | 266206 |
| title | FRONT ELEVATION |
| sheet number | A-3.00 |

V:\Projects\St Therese Catholic Church\266206 A300 - Elevations.dwg May 26, 2026 - 10:08am

RELEASED FOR CONSTRUCTION

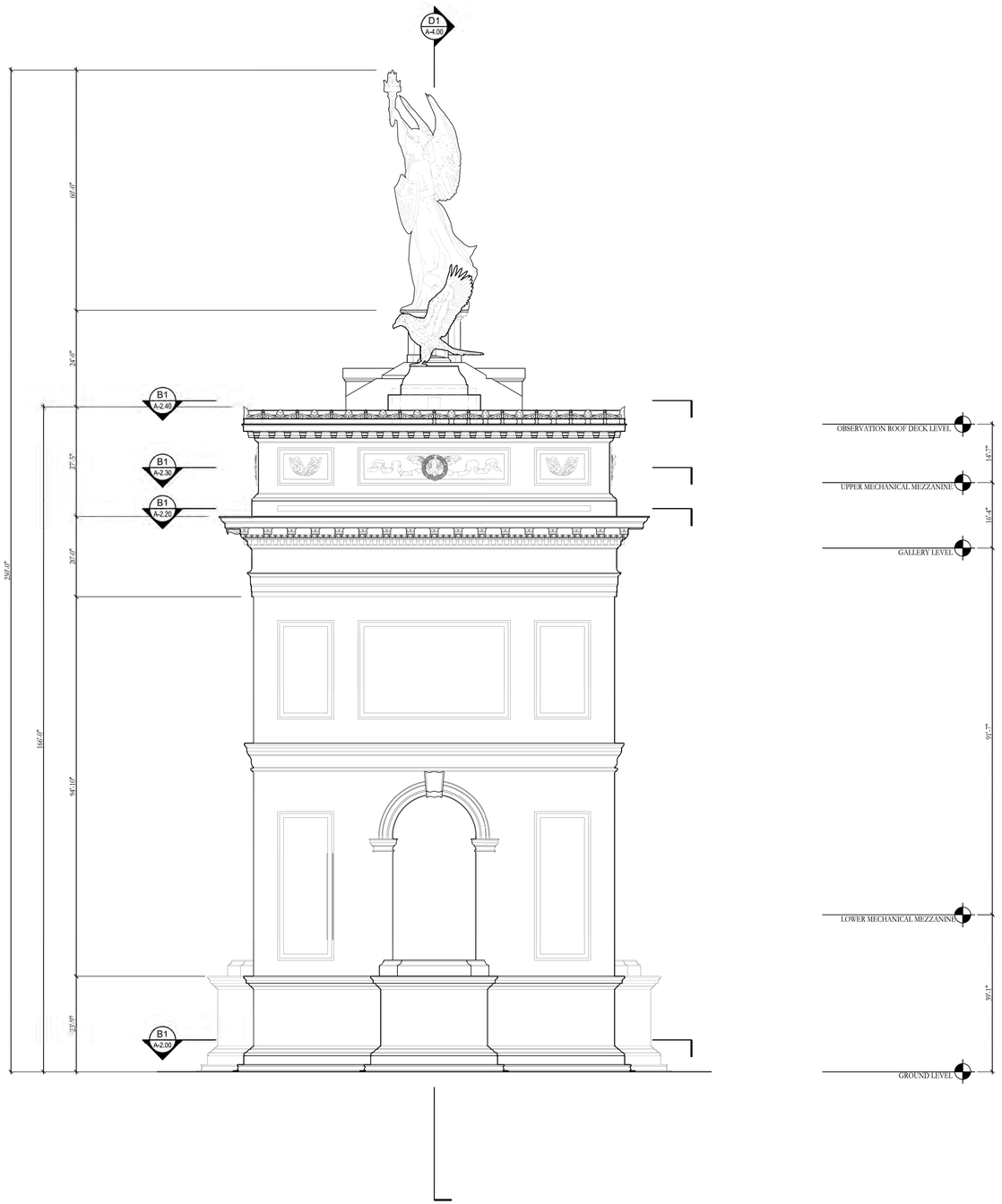


D1 / A-3.10 SIDE ELEVATION
SCALE: 1/16" = 1'=0"

HARRISON DESIGN
1010 Wisconsin Avenue NW,
Suite 835
Washington, DC 20007
(202) 733-1479
harrisondesign.com

All drawings are the property of Harrison Design Associates, Inc. and must be returned at the completion of work. These shall not be reproduced, modified, or revised in any way without the written consent from, and proper compensation to, Harrison Design. The contractor shall check and verify all dimensions and report any discrepancies to Harrison Design before proceeding with the work. Harrison Design shall protect this right and be reimbursed for all legal and court costs, etc., for any necessary protection of the drawings. Submission of these drawings to any public body for any use does not release, in any way, the copyright and ownership of drawings provisions listed herein.

RELEASED FOR CONSTRUCTION

TRIUMPHAL ARCH - WASHINGTON, DC

WASHINGTON, DC

stamps

issue

date 05-25-2026

scale 1/16" = 1'-0"

drawn JG, KA checked NC

project no. 266206

title SIDE ELEVATION

sheet number A-3.10

V:\Projects\St Therese Catholic Church\266206 A3\D - Elevations.dwg May 26, 2026 - 10:00am

RELEASED FOR CONSTRUCTION

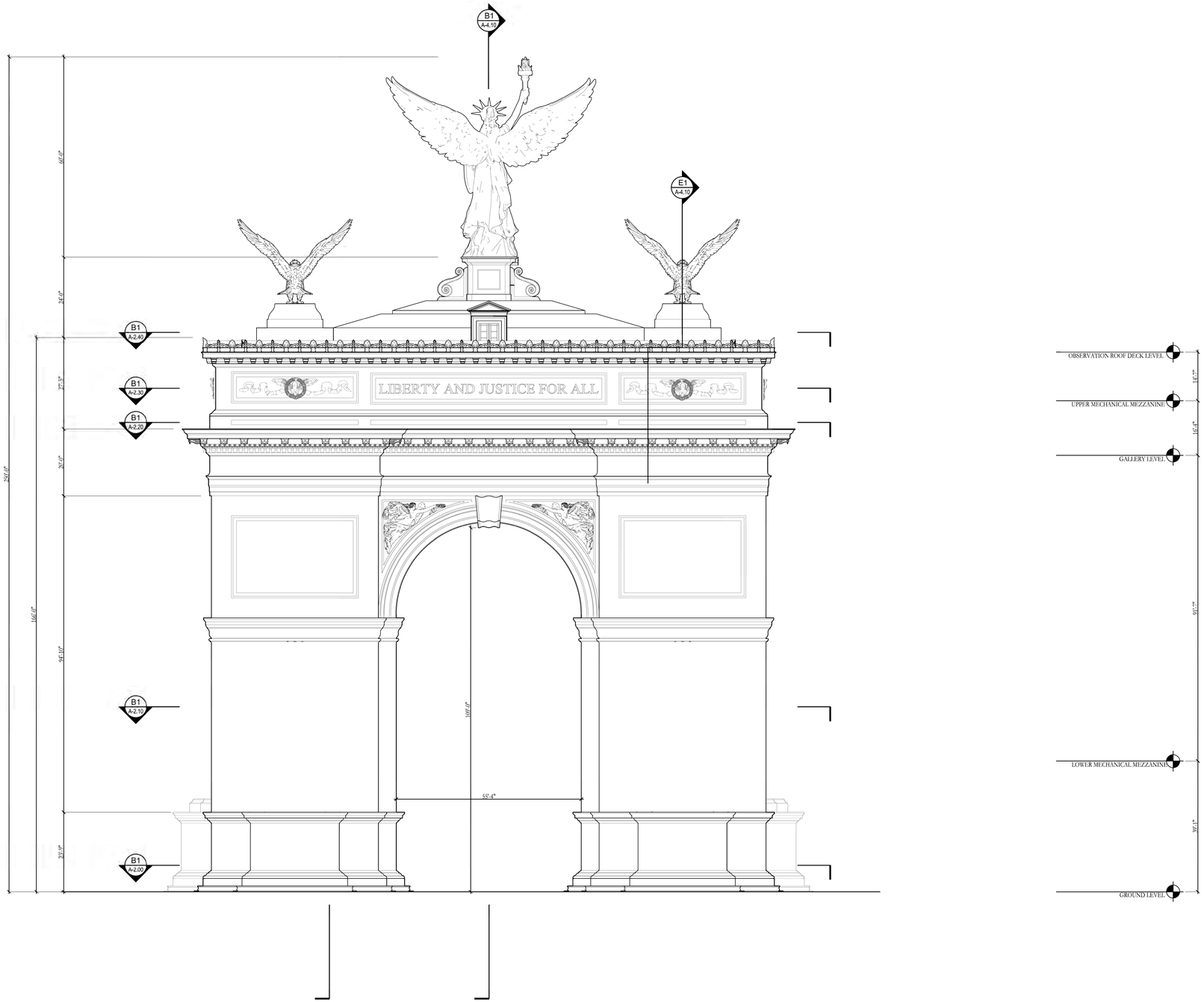


D1
A-3.20
REAR ELEVATION
SCALE: 1/16" = 1'=0"

HARRISON DESIGN
1010 Wisconsin Avenue NW,
Suite 835
Washington, DC 20007
(202) 733-1479
harrisondesign.com

All drawings are the property of Harrison Design Associates, Inc. and must be returned at the completion of work. These shall not be reproduced, modified, or revised in any way without the written consent from, and proper compensation to, Harrison Design. The contractor shall check and verify all dimensions and report any discrepancies to Harrison Design before proceeding with the work. Harrison Design shall protect this right and be reimbursed for all legal and court costs, etc., for any necessary protection of the drawings. Submission of these drawings to any public body for any use does not release, in any way, the copyright and ownership of drawings provisions listed herein.

RELEASED FOR CONSTRUCTION

TRIUMPHAL ARCH - WASHINGTON, DC

WASHINGTON, DC

stamps

issue

| | |
|---|---|
| date | 05-25-2026 |
| scale | 1/16" = 1'-0" |
| drawn | JG, KA |
| checked | NC |
| project no. | 266206 |
| title | REAR ELEVATION |
| sheet number | A-3.20 |

RELEASED FOR CONSTRUCTION

V:\Projects\St Therese Catholic Church\266206 A300 - Elevations.dwg May 26, 2026 - 10:12am

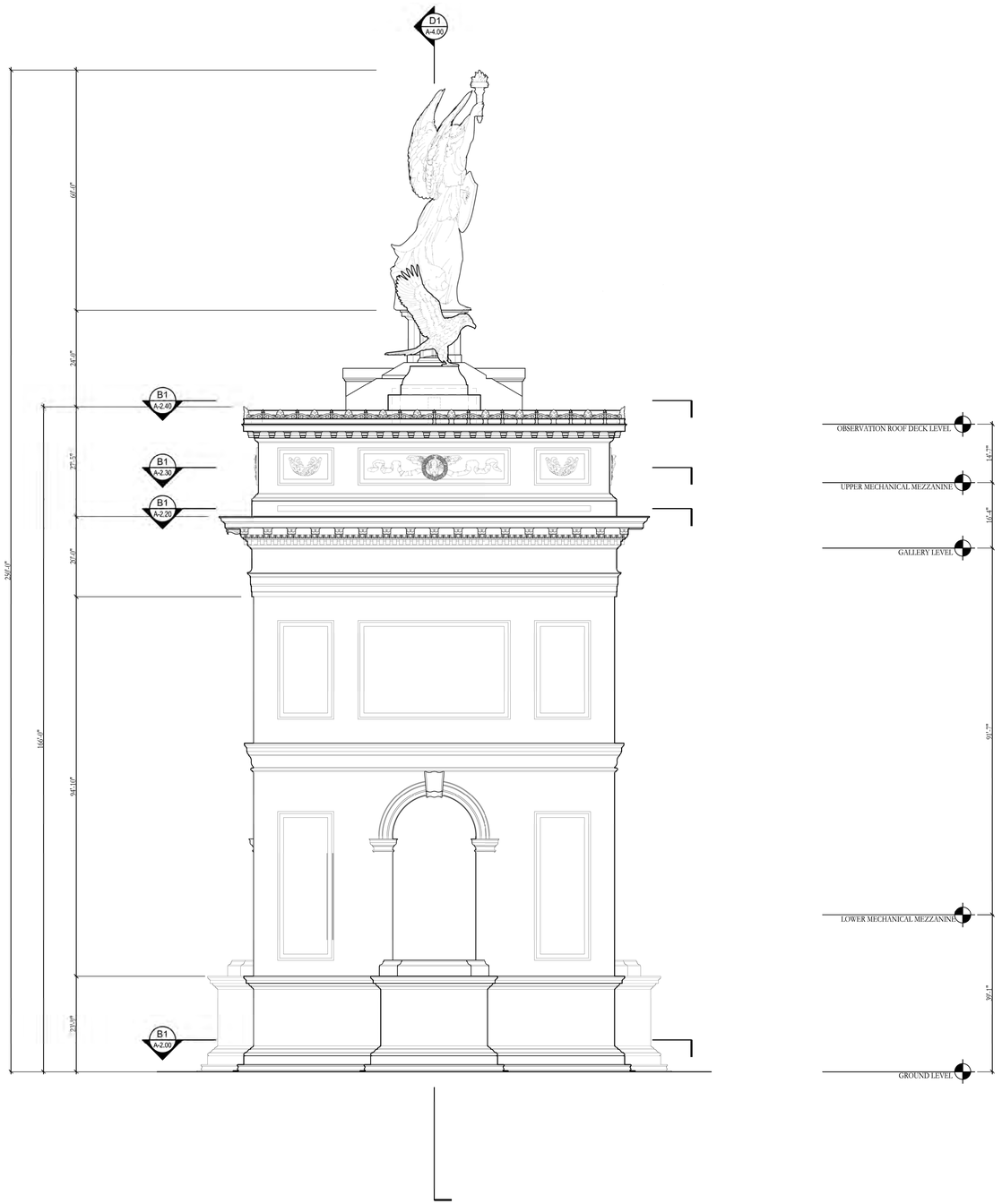


D1 / A-3.30 SIDE ELEVATION

SCALE: 1/16" = 1'=0"

HARRISON DESIGN

1010 Wisconsin Avenue NW,
Suite 835
Washington, DC 20007
(202) 733-1479
harrisondesign.com

All drawings are the property of Harrison Design Associates, Inc. and must be returned at the completion of work. These shall not be reproduced, modified, or revised in any way without the written consent from, and proper compensation to, Harrison Design. The contractor shall check and verify all dimensions and report any discrepancies to Harrison Design before proceeding with the work. Harrison Design shall protect this right and be reimbursed for all legal and court costs, etc., for any necessary protection of the drawings. Submission of these drawings to any public body for any use does not release, in any way, the copyright and ownership of drawings provisions listed herein.

RELEASED FOR CONSTRUCTION

TRIUMPHAL ARCH - WASHINGTON, DC

WASHINGTON, DC

V:\Projects\St Therese Catholic Church\266206 A3D - Elevations.dwg May 26, 2026 - 10:10am

stamps

issue

date 05-25-2026

scale 1/16" = 1'-0"

drawn JG, KA checked NC

project no. 266206

title SIDE ELEVATION

sheet number A-3.30

RELEASED FOR CONSTRUCTION

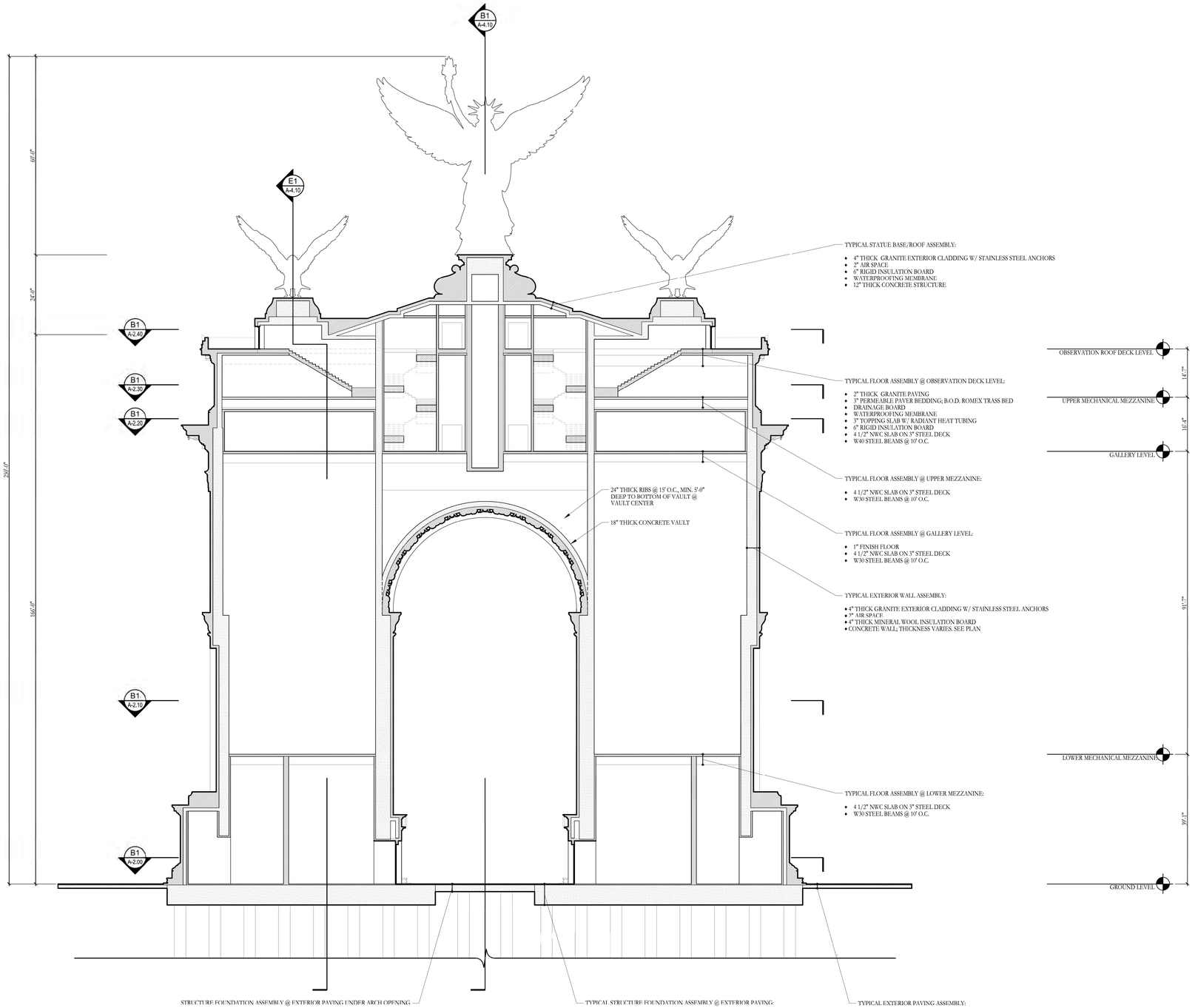


D1 / A-4.00 BUILDING SECTION
SCALE: 1/16" = 1'=0"

HARRISON DESIGN
1010 Wisconsin Avenue NW,
Suite 835
Washington, DC 20007
(202) 733-1479
harrisondesign.com

All drawings are the property of Harrison Design Associates, Inc. and must be returned at the completion of work. These shall not be reproduced, modified, or revised in any way without the written consent from, and proper compensation to, Harrison Design. The contractor shall check and verify all dimensions and report any discrepancies to Harrison Design before proceeding with the work. Harrison Design shall protect this right and be reimbursed for all legal and court costs, etc., for any necessary protection of the drawings. Submission of these drawings to any public body for any use does not release, in any way, the copyright and ownership of drawings provisions listed herein.

RELEASED FOR CONSTRUCTION

TRIUMPHAL ARCH - WASHINGTON, DC

WASHINGTON, DC

stamps

issue

date 05-25-2026
scale 1/16" = 1'-0"
drawn JG, KA checked NC
project no. 266206
title BUILDING SECTION
sheet number A-4.00

RELEASED FOR CONSTRUCTION

May 26, 2026 - 10:13am
V:\Projects\St Therese Catholic Church\266206 A4\0 - Sections.dwg

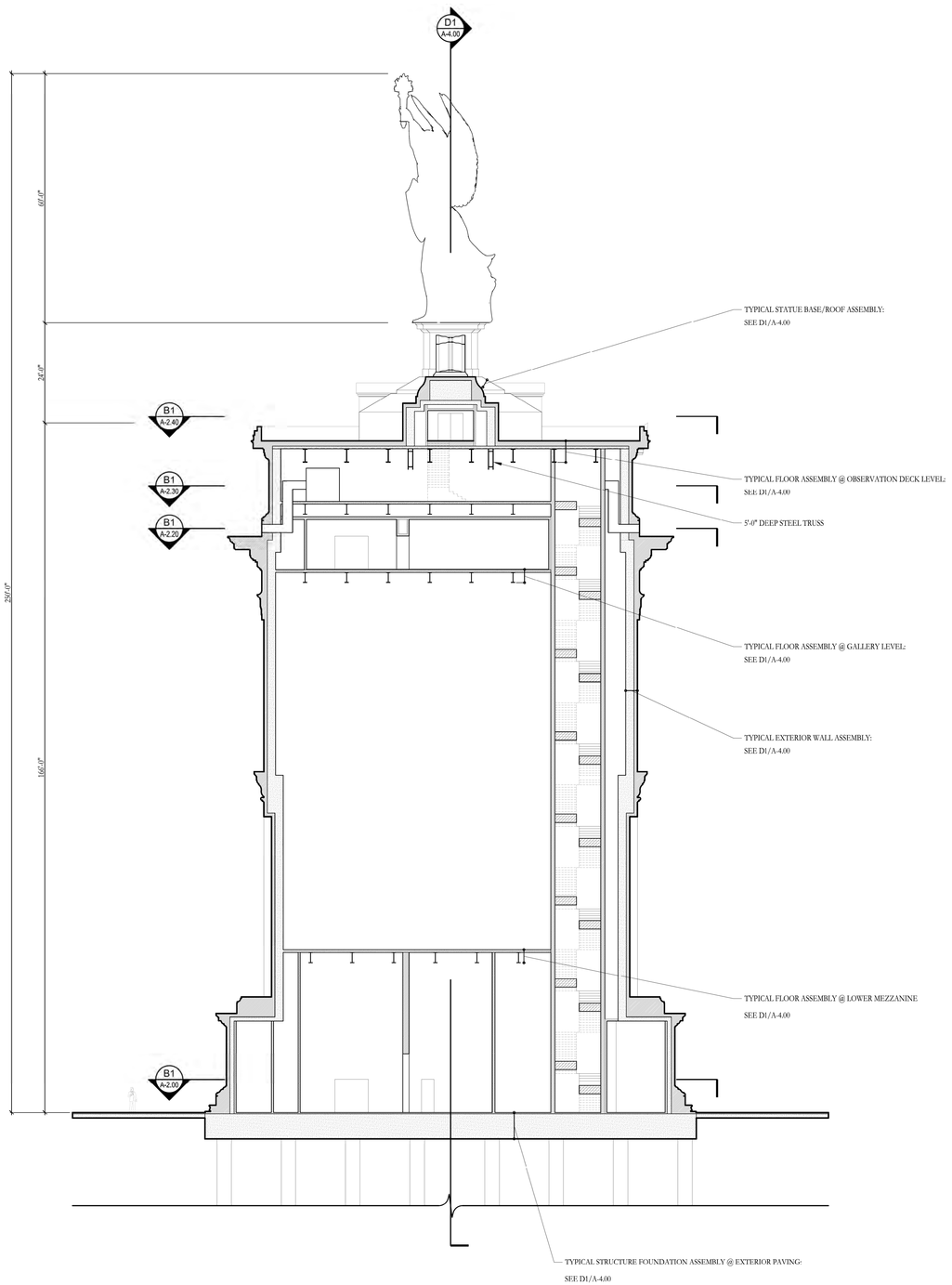


E1 / A-4.10 BUILDING SECTION
SCALE: 1/16" = 1'=0"

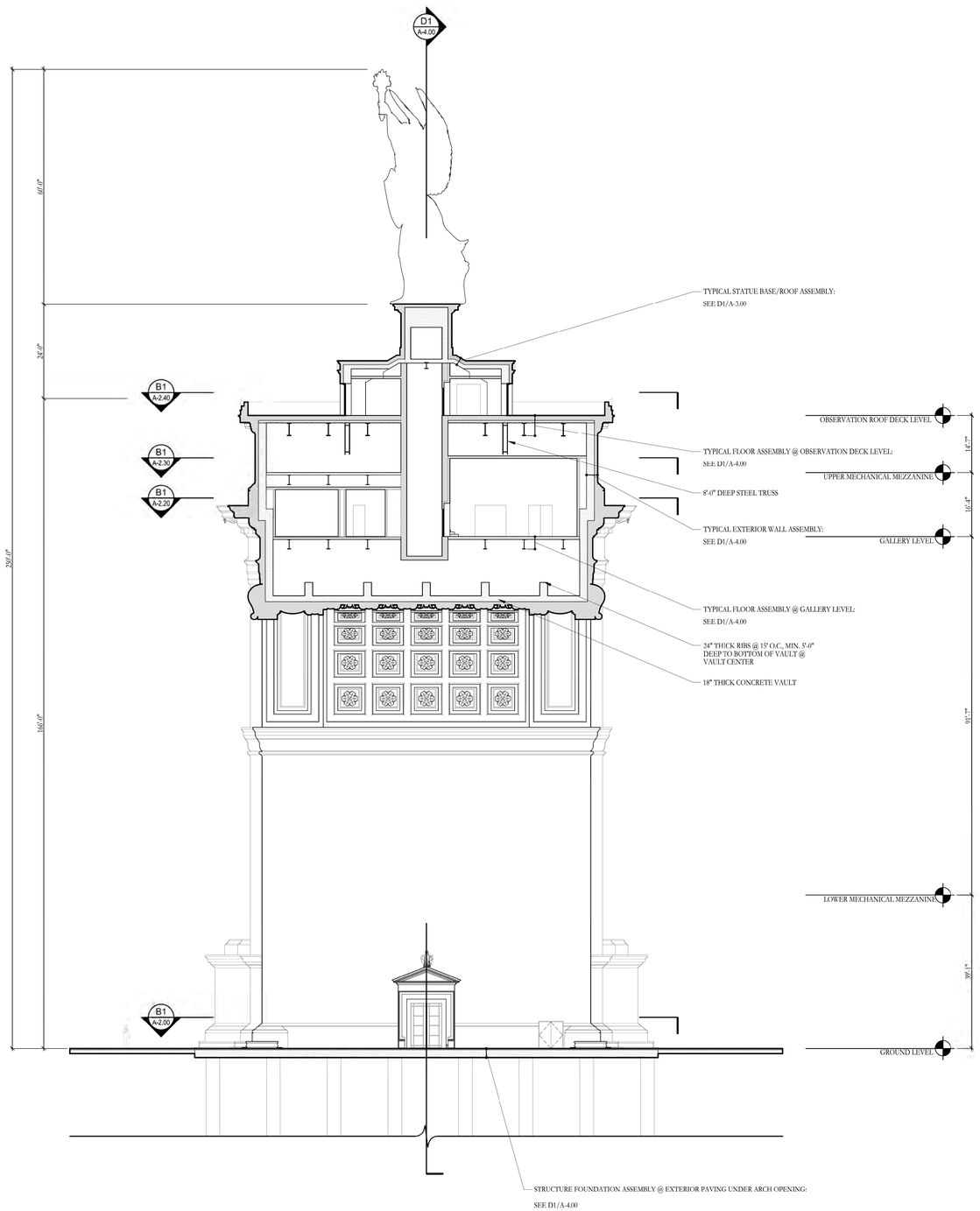


B1 / A-4.10 BUILDING SECTION
SCALE: 1/16" = 1'=0"

HARRISON DESIGN
1010 Wisconsin Avenue NW,
Suite 835
Washington, DC 20007
(202) 733-1479
harrisondesign.com

All drawings are the property of Harrison Design Associates, Inc. and must be returned at the completion of work. These shall not be reproduced, modified, or revised in any way without the written consent from, and proper compensation to, Harrison Design. The contractor shall check and verify all dimensions and report any discrepancies to Harrison Design before proceeding with the work. Harrison Design shall protect this right and be reimbursed for all legal and court costs, etc., for any necessary protection of the drawings. Submission of these drawings to any public body for any use does not release, in any way, the copyright and ownership of drawings provisions listed herein.

RELEASED FOR CONSTRUCTION

# TRIUMPHAL ARCH - WASHINGTON, DC

WASHINGTON, DC

stamps

issue

| | |
|---|---|
| date | 05-25-2026 |
| scale | 1/16" = 1'-0" |
| drawn | JG, KA |
| checked | NC |
| project no. | 266206 |
| title | BUILDING SECTIONS |
| sheet number | A-4.10 |

V:\Projects\St Therese Catholic Church\266206 A4\03 - Sections.dwg May 25, 2026 - 10:15am

RELEASED FOR CONSTRUCTION

MAY 7, 2026

# TRIUMPHAL ARCH - WASHINGTON, DC

RENDERING

HARRISON DESIGN

MAY 7, 2026

# TRIUMPHAL ARCH - WASHINGTON, DC

RENDERING

HARRISON DESIGN

MAY 7, 2026

# TRIUMPHAL ARCH - WASHINGTON, DC

VIEW FROM ARLINGTON HOUSE - BEFORE

HARRISON DESIGN

MAY 7, 2026

# TRIUMPHAL ARCH - WASHINGTON, DC

VIEW FROM ARLINGTON HOUSE - AFTER

HARRISON DESIGN

MAY 7, 2026

# TRIUMPHAL ARCH - WASHINGTON, DC

VIEW FROM HEMICYCLE - BEFORE

HARRISON DESIGN

MAY 7, 2026

# TRIUMPHAL ARCH - WASHINGTON, DC

VIEW FROM HEMICYCLE - AFTER

HARRISON DESIGN

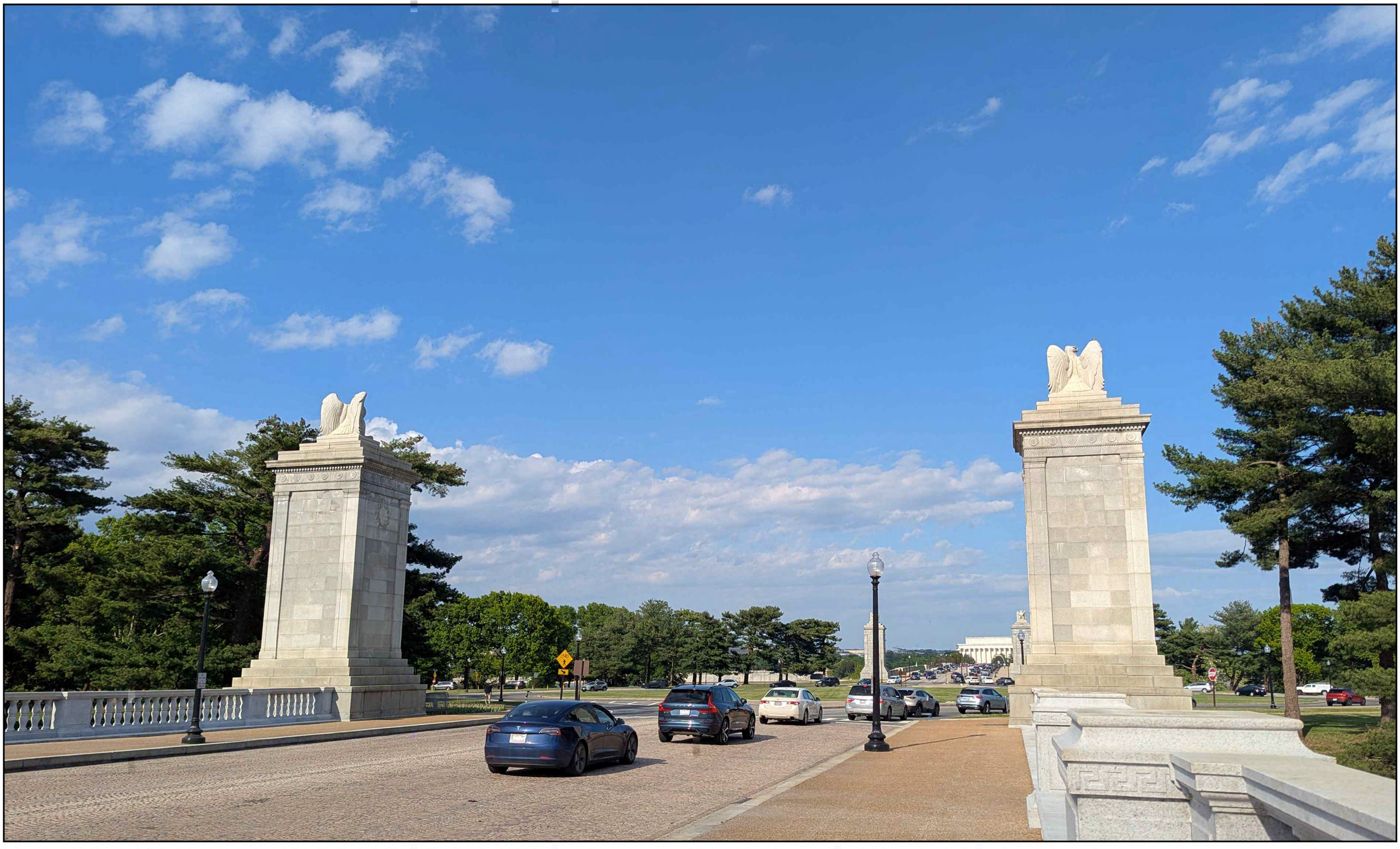

MAY 7, 2026

# TRIUMPHAL ARCH - WASHINGTON, DC

VIEW FROM ARLINGTON BRIDGE - BEFORE

HARRISON DESIGN

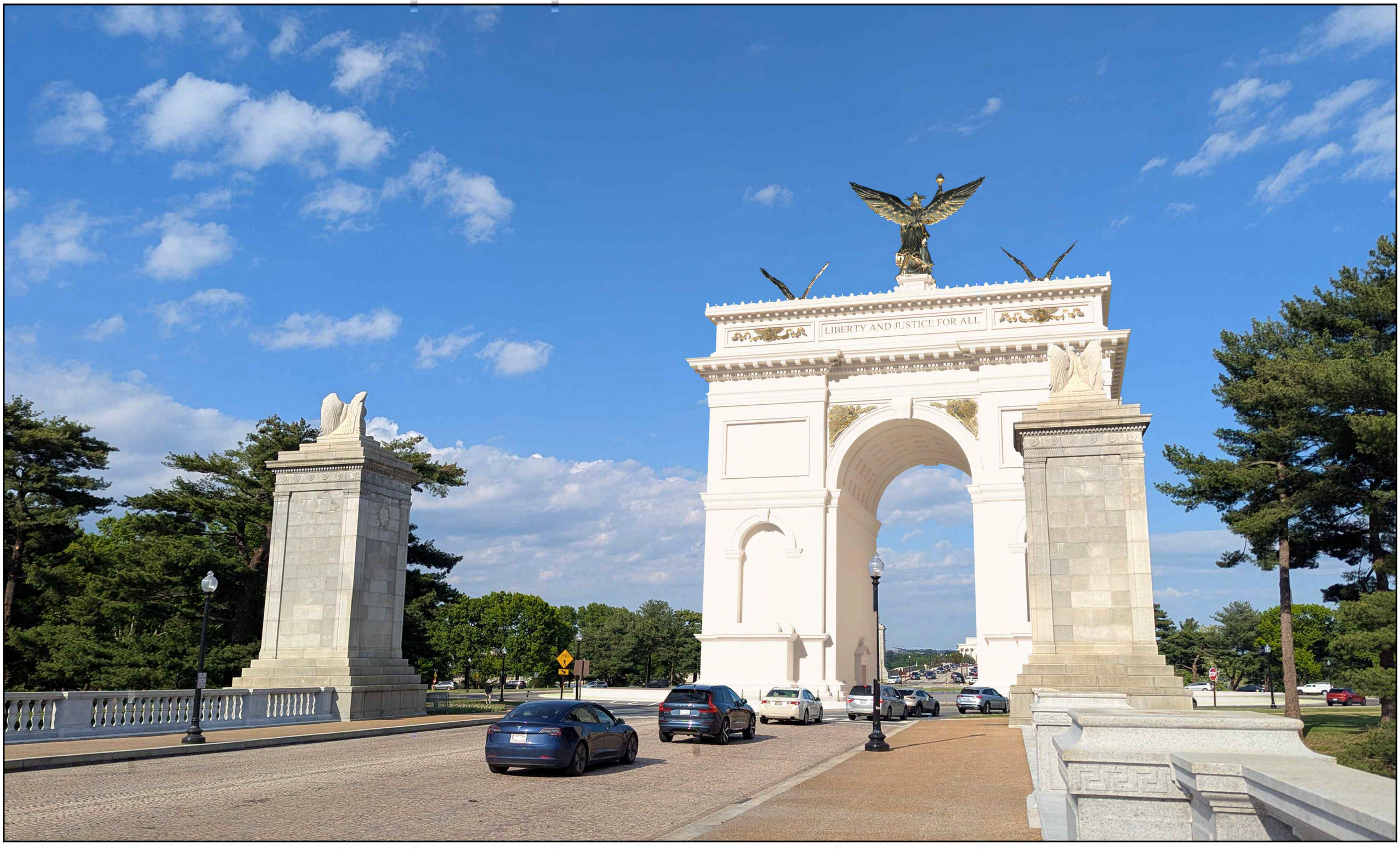


MAY 7, 2026

# TRIUMPHAL ARCH - WASHINGTON, DC

VIEW FROM ARLINGTON BRIDGE - AFTER

HARRISON DESIGN

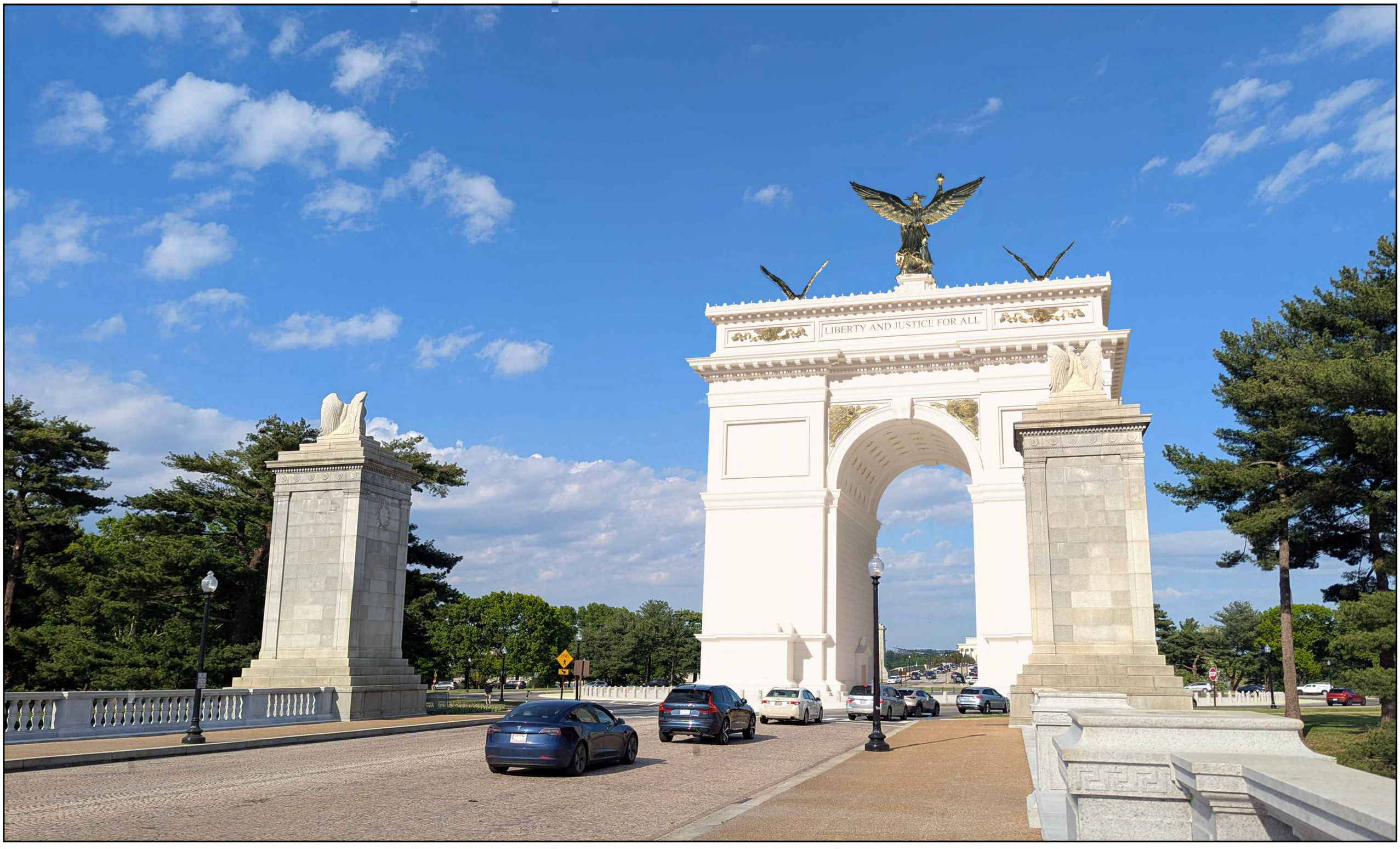


MAY 7, 2026

# TRIUMPHAL ARCH - WASHINGTON, DC

VIEW FROM ARLINGTON BRIDGE - AFTER

HARRISON DESIGN

MAY 7, 2026

# TRIUMPHAL ARCH - WASHINGTON, DC

VIEW FROM MEMORIAL BRIDGE - BEFORE

HARRISON DESIGN

MAY 7, 2026

# TRIUMPHAL ARCH - WASHINGTON, DC

VIEW FROM MEMORIAL BRIDGE - AFTER

HARRISON DESIGN

MAY 7, 2026

# TRIUMPHAL ARCH - WASHINGTON, DC

VIEW FROM PARKWAY DR NW - BEFORE

HARRISON DESIGN

MAY 7, 2026

# TRIUMPHAL ARCH - WASHINGTON, DC

VIEW FROM PARKWAY DR NW - AFTER

HARRISON DESIGN

MAY 7, 2026

# TRIUMPHAL ARCH - WASHINGTON, DC

VIEW FROM LINCOLN MEMORIAL CIRCLE - BEFORE

HARRISON DESIGN

MAY 7, 2026

# TRIUMPHAL ARCH - WASHINGTON, DC

VIEW FROM LINCOLN MEMORIAL CIRCLE - AFTER

HARRISON DESIGN

MAY 7, 2026

# TRIUMPHAL ARCH - WASHINGTON, DC

VIEW FROM LINCOLN MEMORIAL - BEFORE

HARRISON DESIGN

MAY 7, 2026

# TRIUMPHAL ARCH - WASHINGTON, DC

VIEW FROM LINCOLN MEMORIAL - AFTER

HARRISON DESIGN

MAY 7, 2026

# TRIUMPHAL ARCH - WASHINGTON, DC

VIEW FROM WASHINGTON MONUMENT - BEFORE

HARRISON DESIGN

MAY 7, 2026

# TRIUMPHAL ARCH - WASHINGTON, DC

VIEW FROM WASHINGTON MONUMENT - AFTER

HARRISON DESIGN

MAY 7, 2026

# TRIUMPHAL ARCH - WASHINGTON, DC

VIEW FROM WASHINGTON MONUMENT - BEFORE

HARRISON DESIGN

MAY 7, 2026

# TRIUMPHAL ARCH - WASHINGTON, DC

VIEW FROM WASHINGTON MONUMENT - AFTER

HARRISON DESIGN

MAY 7, 2026

# TRIUMPHAL ARCH - WASHINGTON, DC

VIEW FROM CAPITOL HILL - BEFORE

HARRISON DESIGN

MAY 7, 2026

# TRIUMPHAL ARCH - WASHINGTON, DC

VIEW FROM CAPITOL HILL - AFTER

HARRISON DESIGN

MAY 14, 2026

# TRIUMPHAL ARCH - WASHINGTON, DC

VIEW FROM CAPITOL HILL - BEFORE

HARRISON DESIGN

MAY 14, 2026

# TRIUMPHAL ARCH - WASHINGTON, DC

VIEW FROM CAPITOL HILL - AFTER

HARRISON DESIGN

MAY 14, 2026

# TRIUMPHAL ARCH - WASHINGTON, DC

VIEW FROM OBSERVATION DECK TOWARD EAST

HARRISON DESIGN

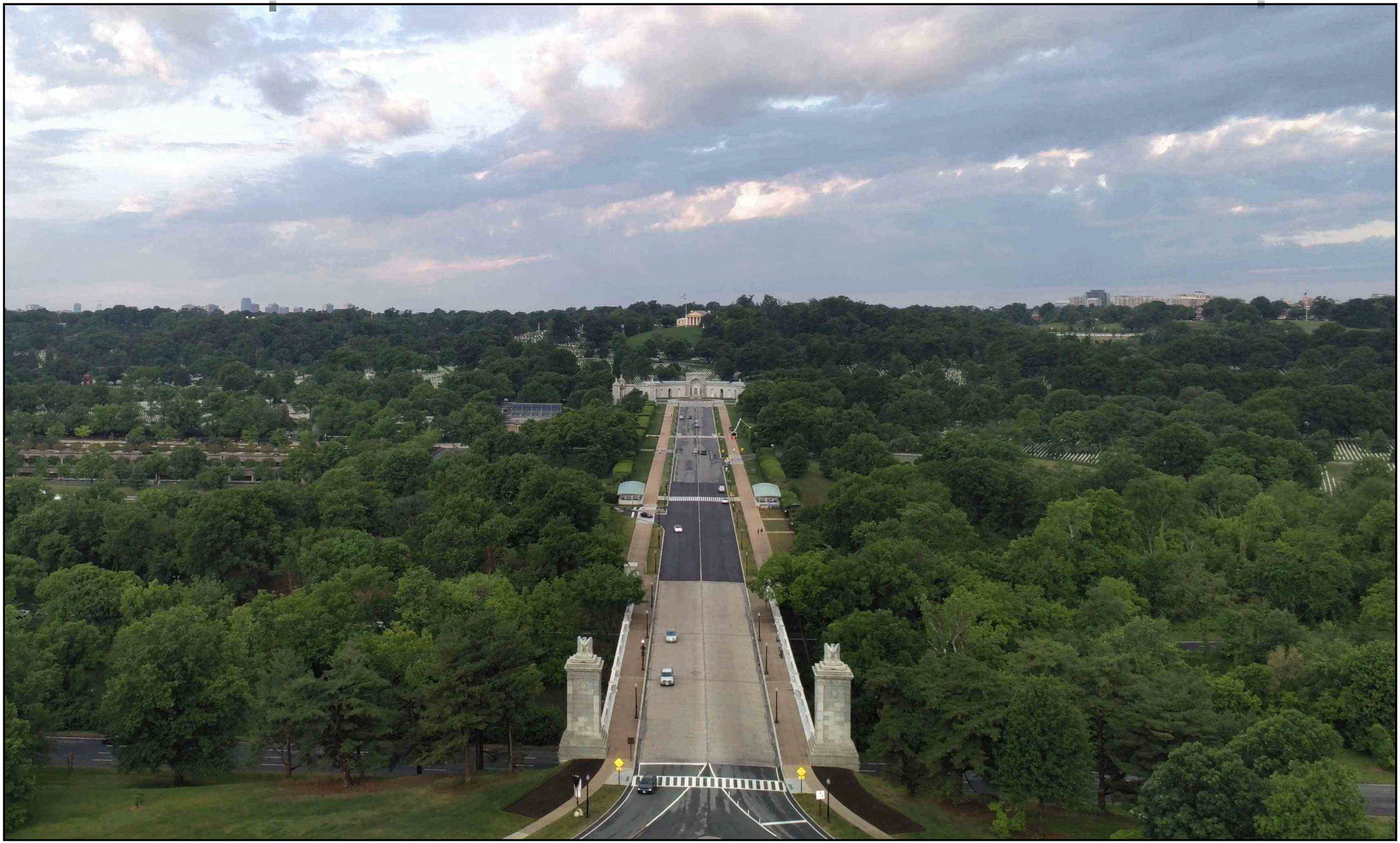

MAY 14, 2026

# TRIUMPHAL ARCH - WASHINGTON, DC

VIEW FROM OBSERVATION DECK TOWARD WEST

HARRISON DESIGN

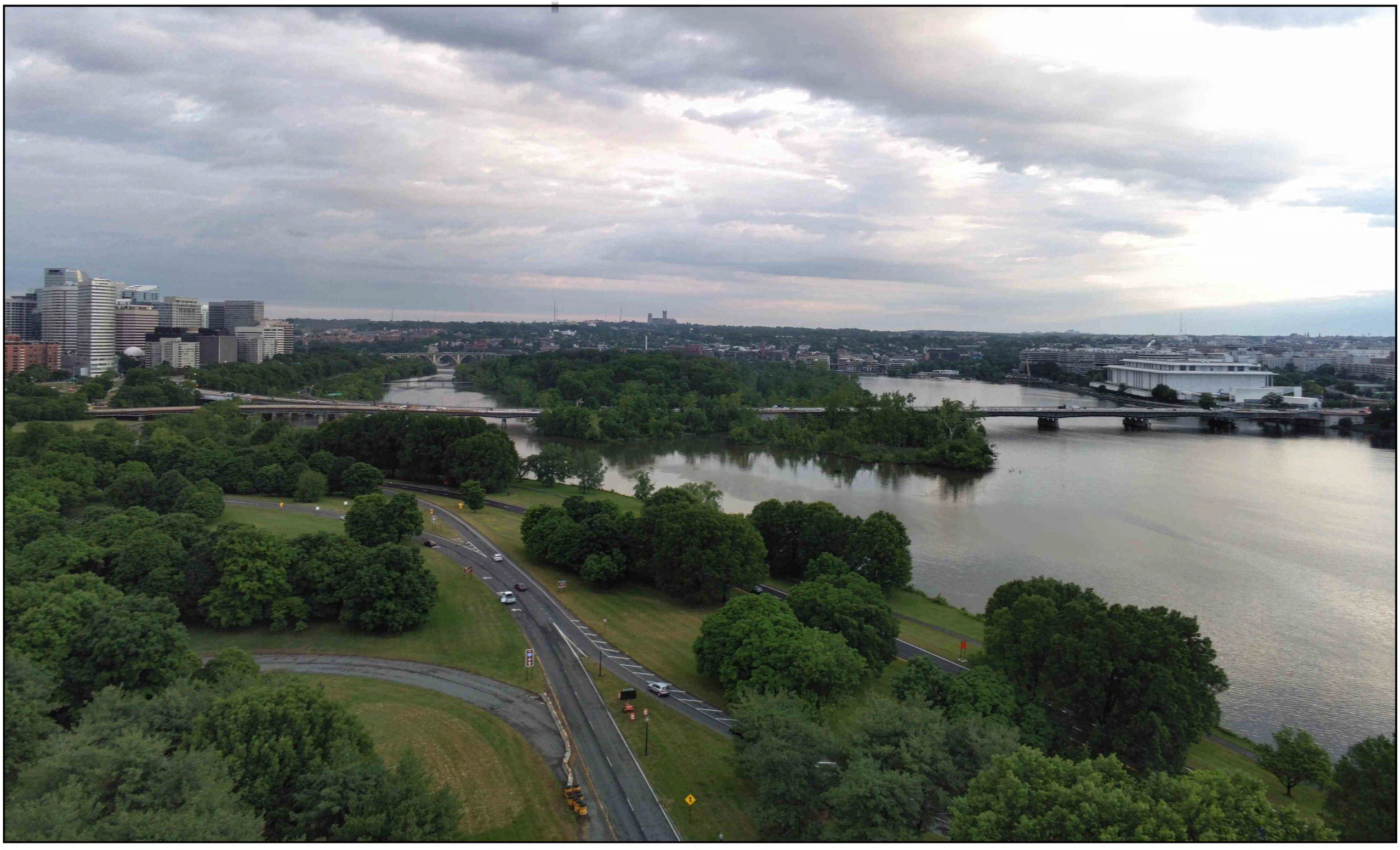

MAY 14, 2026

# TRIUMPHAL ARCH - WASHINGTON, DC

VIEW FROM OBSERVATION DECK TOWARD NORTHEAST

HARRISON DESIGN

MAY 14, 2026

# TRIUMPHAL ARCH - WASHINGTON, DC

VIEW FROM OBSERVATION DECK TOWARD SOUTH

HARRISON DESIGN

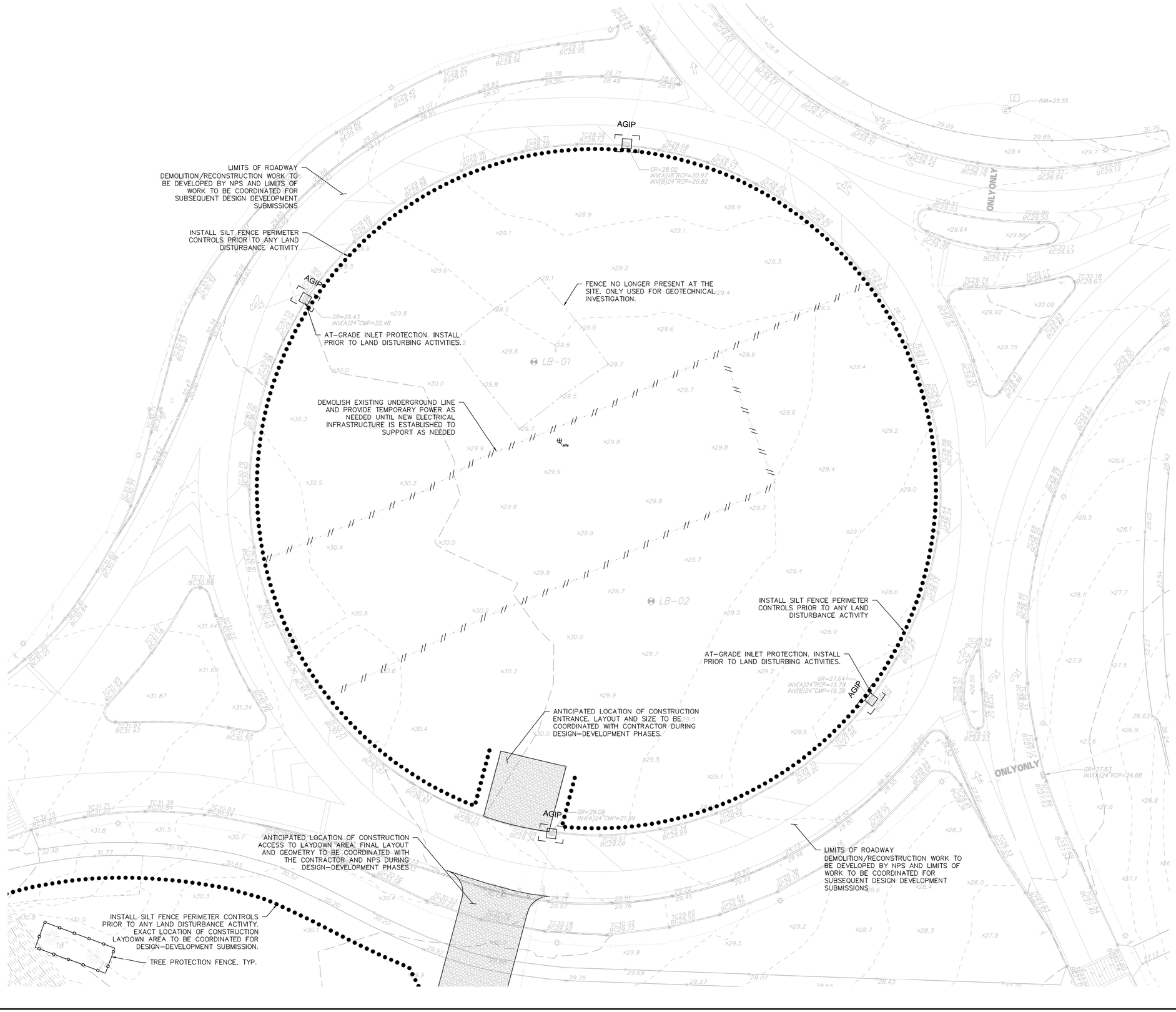


SITE DEMOLITION AND SITE PREPARATION NOTES:

1. THE CONTRACTOR SHALL INSPECT THE SITE THOROUGHLY AND FIELD-VERIFY THE LOCATION AND DEPTH OF ALL EXISTING UTILITIES. CONTRACTORS USING THESE PLANS FOR DEMOLITION OR CONSTRUCTION SHALL CONFIRM ALL UTILITIES IN THE FIELD.
2. THE CONTRACTOR SHALL TAKE ALL NECESSARY PRECAUTIONARY AND PROTECTIVE MEASURES, INCLUDING BOT NOT LIMITED TO SIGNS, LIGHTS, FENCES, BARRIERS, AND PEDESTRIAN AND TRAFFIC CONTROL MEASURES DURING DEMOLITION.
3. RECYCLED ASPHALT OR CONCRETE MAY NOT BE USED FOR FILL.

DOEE SOIL EROSION AND SEDIMENT CONTROL PLAN NOTES:

1. FOLLOWING INITIAL LAND DISTURBANCE OR RE-DISTURBANCE, PERMANENT OR INTERIM STABILIZATION MUST BE COMPLETED WITHIN SEVEN (7) CALENDAR DAYS FOR THE SURFACES OF ALL PERIMETER CONTROLS, DIKES, SWALES, DITCHES,PERIMETER SLOPES, AND SLOPES GREATER THAN 3H:1V, AND FOURTEEN (14) DAYS FOR ALL OTHER DISTURBED OR GRADED AREAS ON THE PROJECT SITE. THESE REQUIREMENTS DO NOT APPLY TO AREAS SHOWN ON THE PLAN THAT ARE USED FOR MATERIAL STORAGE OTHER THAN STOCKPILING, OR FOR THOSE AREAS ON THE PLAN WHERE ACTUAL CONSTRUCTION ACTIVITIES ARE BEING PERFORMED. MAINTENANCE SHALL BE PERFORMED AS NECESSARY SO THAT STABILIZED AREAS CONTINUOUS MEET THE APPROPRIATE REQUIREMENTS OF THE DISTRICT OF COLUMBIA STANDARDS AND SPECIFICATIONS FOR SOIL EROSION AND SEDIMENT CONTROL.
2. ESC MEASURES SHALL BE IN PLACE BEFORE AND DURING LAND DISTURBANCE.
3. CONTACT DOEE INSPECTION (202 535-2977 TO SCHEDULE A PRE-CONSTRUCTION MEETING AT LEAST THREE (3) DAYS BEFORE THE COMMENCEMENT OF A LAND-DISTURBING ACTIVITY.
4. A COPY OF THE APPROVED PLAN SET WILL BE MAINTAINED AT THE CONSTRUCTION SITE FROM THE DATE THAT CONSTRUCTION ACTIVITIES BEGIN TO THE DATE OF FINAL STABILIZATION AND WILL BE AVAILABLE FOR DOEE INSPECTORS.
5. ESC MEASURES SHALL BE IN PLACE TO STABILIZE AN EXPOSED AREA AS SOON AS PRACTICABLE AFTER CONSTRUCTION ACTIVITY HAS BEEN OR PERMANENTLY CEASED BUT NO LATER THAN FOURTEEN (14) DAYS FOLLOWING CESSATION, EXCEPT THAT TEMPORARY OR PERMANENT STABILIZATION SHALL BE IN PLACE AT THE END OF EACH DAY OF UNDERGROUND UTILITY WORK THAT IS NOT CONTAINED WITHIN A LARGER DEVELOPMENT SITE.
6. STOCKPILED MATERIAL BEING ACTIVELY USED DURING A PHASE OF CONSTRUCTION SHALL BE PROTECTED AGAINST EROSION BY ESTABLISHING AND MAINTAINING PERIMETER CONTROLS AROUND THE STOCKPILE.
7. STOCKPILED MATERIAL NOT BEING ACTIVELY USED OR ADDED TO SHALL BE STABILIZED WITH MULCH, TEMPORARY VEGETATION, HYDRO-SEE OR PLASTIC WITHIN FIFTEEN CALENDAR DAYS AFTER ITS LAST USE OR ADDITION.
8. PROTECT BEST MANAGEMENT PRACTICES FROM SEDIMENTATION AND OTHER DAMAGE DURING CONSTRUCTION FOR PROPER POST CONSTRUCTION OPERATION.
9. REQUEST A DOEE INSPECTOR'S APPROVAL AFTER THE INSTALLATION OF PERIMETER EROSION AND SEDIMENT CONTROLS, BUT BEFORE PROCEEDING WITH ANY OTHER EARTH DISTURBANCE OR GRADING.
10. REQUEST A DOEE INSPECTOR'S APPROVAL AFTER FINAL STABILIZATION OF THE SITE AND BEFORE THE REMOVAL OF EROSION AND SEDIMENT CONTROLS.
11. FINAL STABILIZATION MEANS THAT ALL LAND-DISTURBING ACTIVITIES AT THE SITE HAVE BEEN COMPLETED AND EITHER OF THE FOLLOWING TWO CRITERIA HAVE BEEN MET: (1) A UNIFORM PERENNIAL VEGETATIVE COVER WITH A DENSITY OF SEVENTY PERCENT OF THE NATIVE BACKGROUND VEGETATIVE COVER FOR THE AREA HAS BEEN ESTABLISHED ON ALL UNPAVED AREAS AND AREAS NOT COVERED BY PERMANENT STRUCTURES OR (2) EQUIVALENT PERMANENT STABILIZATION MEASURES HAVE BEEN EMPLOYED.
12. FOLLOW THE REQUIREMENTS OF THE UNITED STATED EPS SWPPP AND MAINTAIN A LEGIBLE COPY OF THIS SWPPP ON SITE.
13. POST A SIGN THAT NOTIFIES THE PUBLIC TO CONTACT DOEE IN THE EVENT OF EROSION OR OTHER POLLUTION. THE SIGHT WILL BE PLACED AT EACH ENTRANCE TO THE SITE OR AS DIRECTED BY THE DOEE INSPECTOR. EACH SIGN WILL BE NO LESS THAN 18 x 24 INCHES IN SIZE AND MADE OF MATERIALS THAT WILL WITHSTAND WEATHER FOR THE DURATION OF THE PROJECT. LETTERING WILL BE AT LEAST 1 INCH IN HEIGHT AND EASILY READABLE BY THE PUBLIC FROM A DISTANCE OF TWELVE FEET (12 FT). THE SIGN MUST DIRECT THE PUBLIC, IN SUBSTANTIALLY THE FOLLOWING FORM: " TO REPORT EROSION, RUNOFF OR STORMWATER POLLUTION" AND WILL PROVIDE TEH CONSTRUCTION SITE ADDRESS, DOEE'S TELEPHONE NUMBER, DOEE'S EMAIL ADDRESS AND THE 311 MOBILE APP HEADING.

| Date | Description | No. |
|---|---|---|
| Revisions | | |

Signature Date


LANGAN
Langan Engineering and Environmental Services, LLC
1300 Wilson Blvd
Arlington, VA 22209
www.langan.com


Project

CONFIDENTIAL PROJECT

GEORGE WASHINGTON MEMORIAL PARKWAY
PAR03170001
WASHINGTON DISTRICT OF COLUMBIA

Drawing Title

DEMOLITION AND SITE PREPARATION PLAN

| Project No. | Drawing No. |
|---|---|
| 270228201 | CD101 |
| Date: 05/22/2026 | |
| Drawn By: AMF | |
| Checked By: RCL | 0 |

LANGAN
Project No. 001234501

©2018 Langan

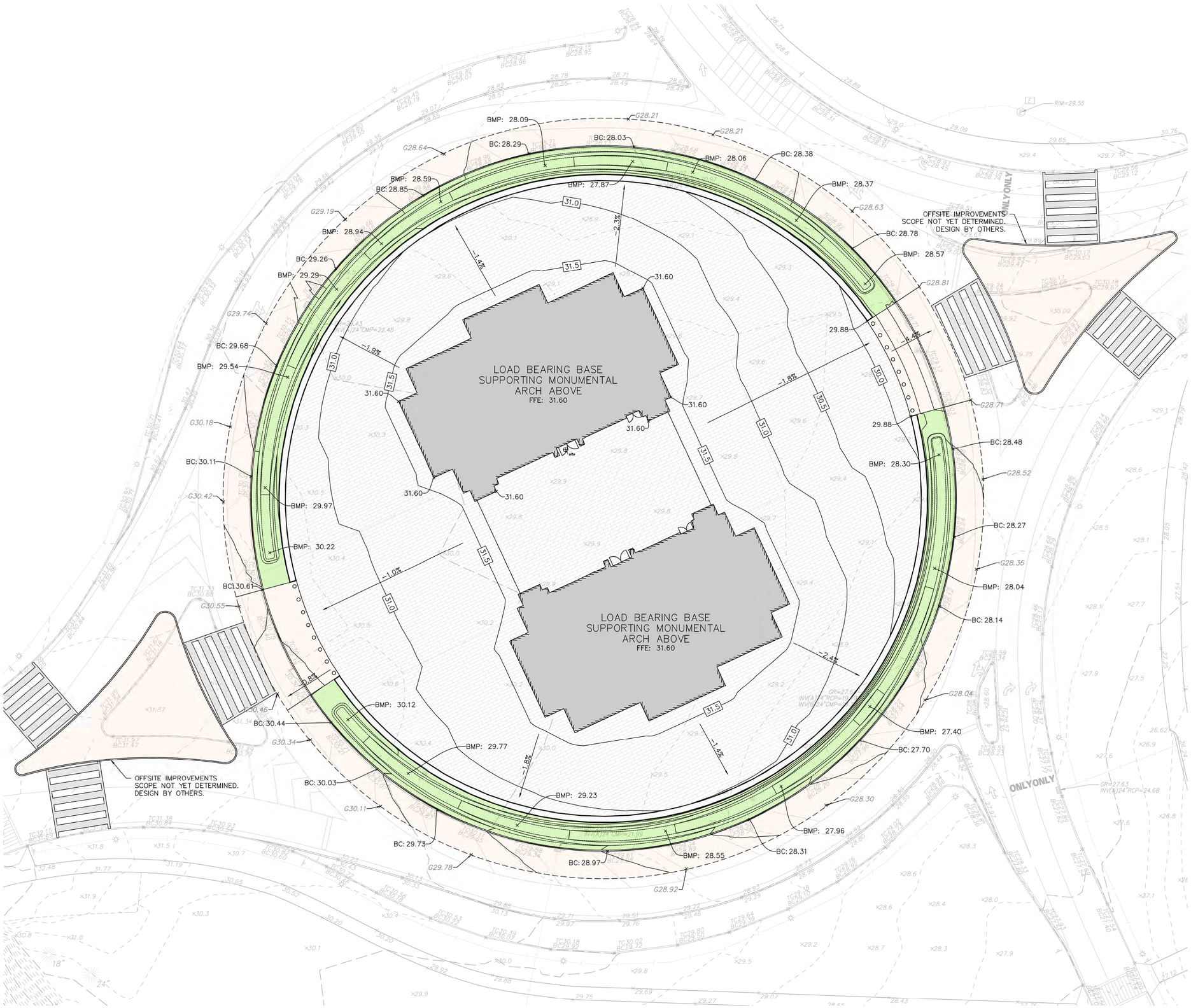


GRADING PLAN NOTES:

1. ALL GRADING, DRAINAGE AND UTILITY INSTALLATION AND/OR CONSTRUCTION SHALL BE PERFORMED IN ACCORDANCE WITH THE PROJECT SPECIFICATIONS OR LOCAL REQUIREMENTS. SHOULD A DIFFERENCE IN REQUIREMENTS OCCUR, THE STRICTER OF THE TWO REGULATIONS WILL APPLY.
2. GRADE ALL AREAS OTHER THAN PAVED GRADED AREAS AND BUILDINGS, INCLUDING EXCAVATED AREAS, FILLED AND TRANSITION AREAS, AND LANDSCAPED AREAS TO FINISH GRADE ELEVATIONS OR CONTOURS AS INDICATED ON DRAWINGS. FINISHED SUBGRADE SURFACE SHALL BE UNIFORM AND SMOOTH, FREE FROM ROCK, DEBRIS, OR IRREGULAR SURFACE CHANGES. FINISHED SUBGRADE SHALL NOT BE MORE THAN 0.01 FEET ABOVE OR BELOW ESTABLISHED FINISHED SUBGRADE ELEVATION, AND ALL GROUND SURFACES SHALL VARY UNIFORMLY BETWEEN INDICATED ELEVATIONS. DITCHES SHALL BE GRADED TO ALLOW FOR PROPER DRAINAGE WITHOUT PONDING AND IN A MANNER THAT WILL MINIMIZE EROSION POTENTIAL.
3. ALL DRAINAGE STRUCTURES AND STORM SEWER PIPES SHALL MEET HEAVY DUTY TRAFFIC LOADING AND BE INSTALLED ACCORDINGLY.
4. SITE GRADING SHALL NOT PROCEED UNTIL ALL EROSION CONTROL MEASURES HAVE BEEN INSTALLED.
5. CONTRACTOR SHALL REVIEW ALL DRAINAGE CONNECTIONS TO MANHOLES AND CATCH BASINS AND INCREASE THE INLET BOX SIZES AS NECESSARY TO ACCOMMODATE THE PROPOSED INLET AND OUTLET PIPES.
6. ALL GRADING IS TO PROMOTE POSITIVE DRAINAGE AWAY FROM THE BUILDING.
7. ALL PAVING THICKNESSES SHOWN ARE THE COMPACTED THICKNESS.
8. CURB ELEVATIONS INDICATED "BC" ARE BOTTOM OF CURB ELEVATIONS. CURB ELEVATIONS INDICATED AS "TC" ARE TOP OF CURB ELEVATIONS.

20 0 5 10 20
SCALE: 1 INCH = 20 FEET

| Date | Description | No. |
|---|---|---|

Revisions

Signature Date


LANGAN
Langan Engineering and Environmental Services, LLC
1300 Wilson Blvd
Arlington, VA 22209
www.langan.com


Project

CONFIDENTIAL PROJECT

GEORGE WASHINGTON MEMORIAL PARKWAY
PAR03170001
WASHINGTON DISTRICT OF COLUMBIA

Drawing Title

GRADING PLAN

| Project No. | Drawing No. |
|---|---|
| 270228201 | CG101 |
| Date: 05/22/2026 | |
| Drawn By: AMF | |
| Checked By: RCL | |

LANGAN
Project No. 001234501

©2016 Langan

Date: 5/22/2026 Time: 17:33 User: tarvin Style Table: Langan.stb Layout: Layout1 Document Code: 270228201-0301-CG101-0101

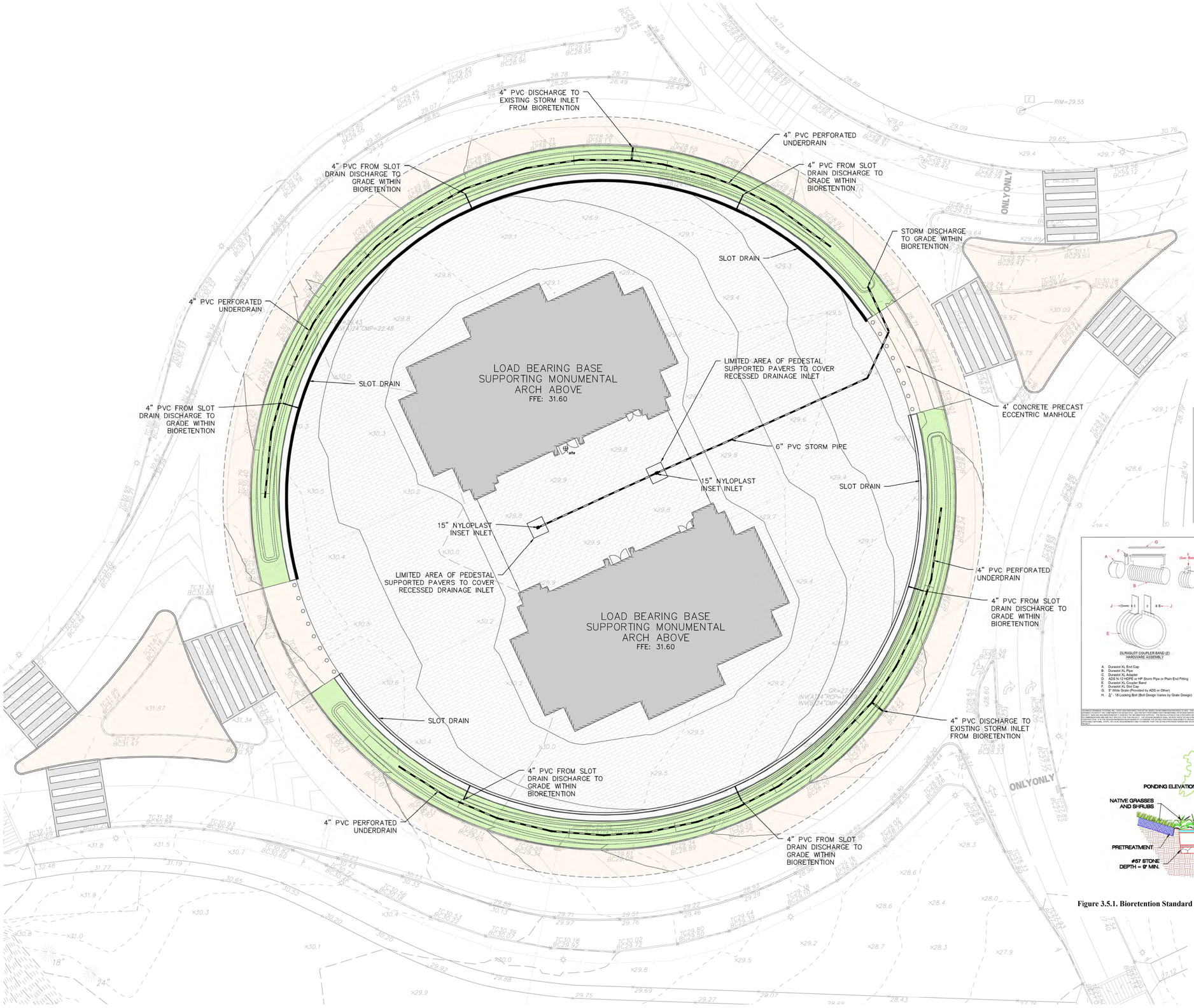


DRAINAGE PLAN NOTES:

1. ALL GRADING, DRAINAGE AND UTILITY INSTALLATION AND/OR CONSTRUCTION SHALL BE PERFORMED IN ACCORDANCE WITH THE PROJECT SPECIFICATIONS OR LOCAL REQUIREMENTS. SHOULD A DIFFERENCE IN REQUIREMENTS OCCUR, THE STRICTER OF THE TWO REGULATIONS WILL APPLY.
2. GRADE ALL AREAS OTHER THAN PAVED GRADED AREAS AND BUILDINGS, INCLUDING EXCAVATED AREAS, FILLED AND TRANSITION AREAS, AND LANDSCAPED AREAS TO FINISH GRADE ELEVATIONS OR CONTOURS AS INDICATED ON DRAWINGS. FINISHED SUBGRADE SURFACE SHALL BE UNIFORM AND SMOOTH, FREE FROM ROCK, DEBRIS, OR IRREGULAR SURFACE CHANGES. FINISHED SUBGRADE SHALL NOT BE MORE THAN 0.01 FEET ABOVE OR BELOW ESTABLISHED FINISHED SUBGRADE ELEVATION, AND ALL GROUND SURFACES SHALL VARY UNIFORMLY BETWEEN INDICATED ELEVATIONS. DITCHES SHALL BE GRADED TO ALLOW FOR PROPER DRAINAGE WITHOUT PONDING AND IN A MANNER THAT WILL MINIMIZE EROSION POTENTIAL.
3. ALL DRAINAGE STRUCTURES AND STORM SEWER PIPES SHALL MEET HEAVY DUTY TRAFFIC LOADING AND BE INSTALLED ACCORDINGLY.
4. SITE GRADING SHALL NOT PROCEED UNTIL ALL EROSION CONTROL MEASURES HAVE BEEN INSTALLED.
5. CONTRACTOR SHALL REVIEW ALL DRAINAGE CONNECTIONS TO MANHOLES AND CATCH BASINS AND INCREASE THE INLET BOX SIZES AS NECESSARY TO ACCOMMODATE THE PROPOSED INLET AND OUTLET PIPES.
6. ALL GRADING IS TO PROMOTE POSITIVE DRAINAGE AWAY FROM THE BUILDING.
7. CURB ELEVATIONS INDICATED "BC" ARE BOTTOM OF CURB ELEVATIONS. CURB ELEVATIONS INDICATED AS "TC" ARE TOP OF CURB ELEVATIONS.

STORMWATER CONVEYANCE NARRATIVE

THE PROPOSED STORMWATER CONVEYANCE SYSTEM CONSISTS OF A SERIES OF INLETS AND SLOT DRAINS THAT WILL CAPTURE AND CONVEY STORMWATER RUNOFF FROM THE MONUMENT PLAZA TO SURROUNDING STORMWATER MANAGEMENT INFRASTRUCTURE (IE. BIORETENTION). OVERFLOW DRAINS FROM THE BIO–RETENTION AREA WILL CONNECT TO EXISTING STORM DRAINS LOCATED WITHIN MEMORIAL CIRCLE, BEFORE ULTIMATELY DISCHARGING TO THE POTOMAC RIVER AND BOUNDARY CHANNEL.

STORMWATER MANAGEMENT NARRATIVE

BASED ON DC WATER REGULATIONS AND THE ANTICIPATED LIMITS OF DISTURBANCE (76,000 SQUARE FEET), THE PROJECT IS CONSIDERED A MAJOR LAND DISTURBANCE ACTIVITY. AS SUCH, THE STORMWATER MANAGEMENT RETENTION VOLUME IS DEVELOPED BASED ON A 1.2 INCH STORM, PER DOEE REGULATIONS.

BASED ON A PRELIMINARY CALCULATION FROM THE SURFACE AND GROUNDWATER SYSTEM, THE ANTICIPATED SWRv IS 6,301 CUBIC FEET.

THE PROJECT WILL BE REQUIRED TO RETAIN OR TREAT AT LEAST 50% OF THE SWRv.

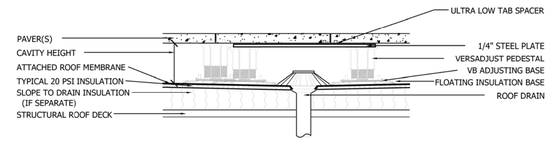


A1 **DRAIN PEDESTAL PLACEMENT SECTION DETAIL**

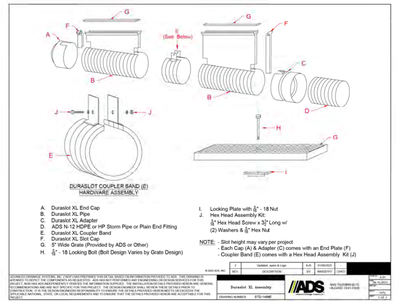


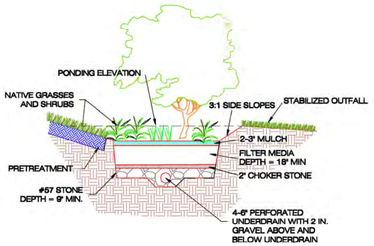


**Figure 3.5.1. Bioretention Standard Design.**

20 0 5 10 20
SCALE: 1 INCH = 20 FEET

| Date | Description | No. |
|---|---|---|
| Revisions | | |

Signature Date


LANGAN
Langan Engineering and Environmental Services, LLC
1300 Wilson Blvd
Arlington, VA 22209
www.langan.com


Project
CONFIDENTIAL PROJECT
GEORGE WASHINGTON MEMORIAL PARKWAY
PAR03170001
WASHINGTON DISTRICT OF COLUMBIA

Drawing Title
DRAINAGE PLAN

| Project No. | Drawing No. |
|---|---|
| 270228201 | CG102 |
| Date: 05/22/2026 | |
| Drawn By: AMF | |
| Checked By: RCL | |

LANGAN Project No. 001234501

©2018 Langan

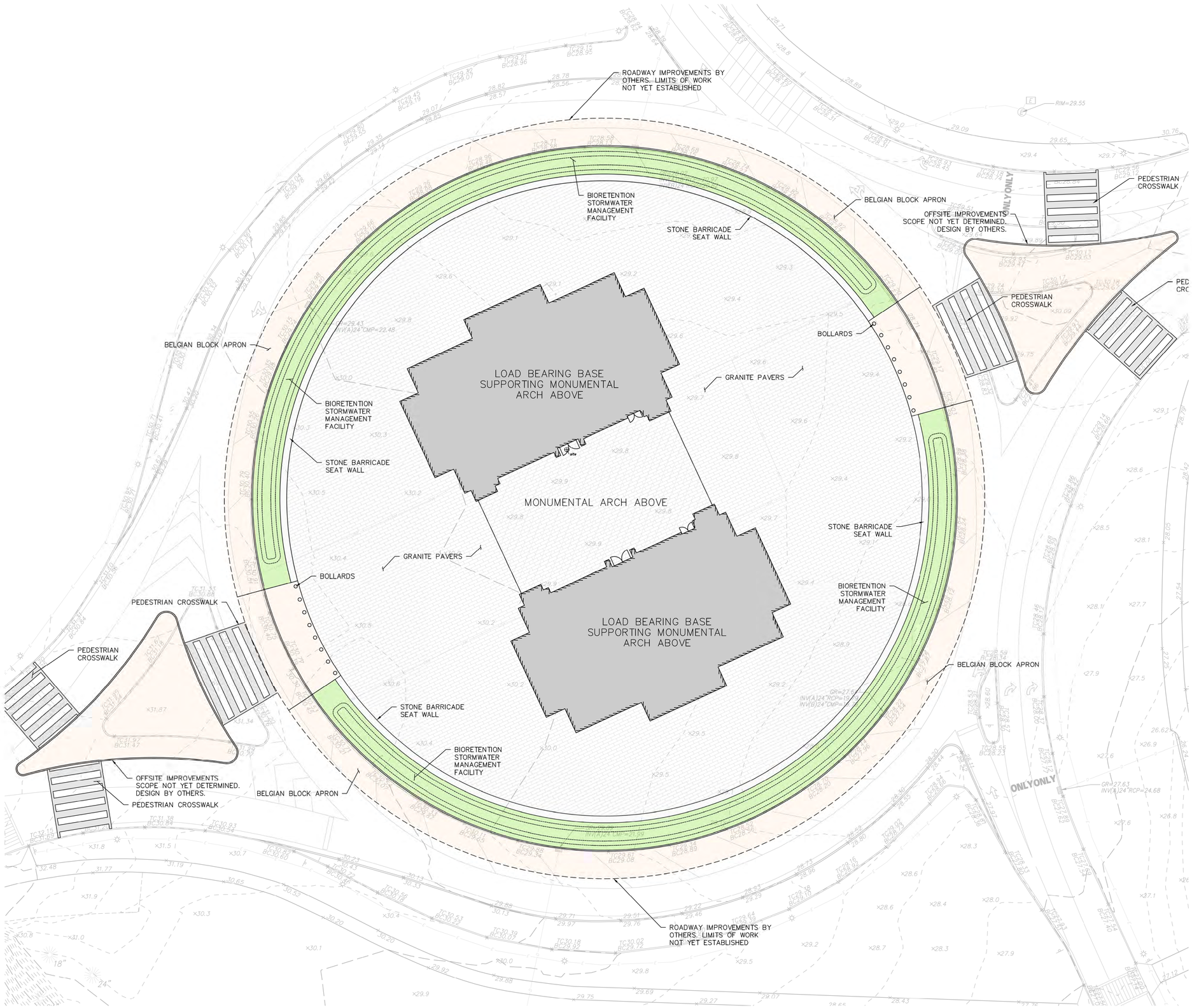


SITE PLAN NOTES:

1. ALL ELEVATIONS ARE SHOWN IN DATUM NAVD 88.
2. CONSTRUCTION INFORMATION AND REQUIREMENTS ARE LOCATED IN NUMEROUS PROJECT DOCUMENTS SUCH AS DRAWINGS, SPECIFICATIONS, DETAILS, NOTES, ORDINANCES, CODES, PERMITS, STANDARDS, GUIDELINES AND MANUFACTURER DOCUMENTS. THE MOST STRINGENT CRITERIA SHALL APPLY.
3. CONTRACTOR IS RESPONSIBLE FOR OBTAINING COPIES, UNDERSTANDING AND IMPLEMENTING THE REFERENCED PROJECT STANDARDS (I.E. ASTM, AWWA, AASHTO, ETC.), PROJECT PERMIT REQUIREMENTS, REGULATORY CODES AND REGULATIONS, AND MANUFACTURER GUIDELINES AND REQUIREMENTS.
4. UNDERGROUND UTILITIES AND INFRASTRUCTURE ARE LOCATED THROUGHOUT THE SITE AND MAY BE PRESENT IN AREAS OF PROPOSED WORK. CONTRACTOR IS RESPONSIBLE FOR FIELD VERIFYING AND LOCATING UNDERGROUND UTILITIES AND INFRASTRUCTURE PRIOR TO WORK. IF CONFLICTS WITH PROPOSED WORK ARE OBSERVED, CONTRACTOR SHALL NOTIFY ENGINEER IMMEDIATELY FOR REVIEW. CONTRACTOR SHALL USE EXTREME CARE WHEN WORKING ADJACENT TO EXISTING UNDERGROUND UTILITIES AND INFRASTRUCTURE.
5. THE ROADWAY IMPROVEMENTS SURROUNDING MEMORIAL CIRCLE AND THE PROPOSED MONUMENT ARE CURRENTLY BEING DEVELOPED BY NPS. THE LIMITS OF ROADWORK SHOWN HEREIN ARE PROVIDED FOR REFERENCE ONLY AND WILL BE COORDINATED WITH NPS DURING THE DESIGN DEVELOPMENT PHASE OF THE PROJECT.

LEGEND:

| | |
|---|---|
| LOAD BEARING BASE SUPPORTING MONUMENTAL ARCH ABOVE | |
| ARCH OVERHEAD | |
| GRANITE PAVERS | |
| LANDSCAPE | |

SCALE: 1 INCH = 20 FEET

| Date | Description | No. |
|---|---|---|

Revisions

Signature Date

LANGAN
Langan Engineering and Environmental Services, LLC
1300 Wilson Blvd
Arlington, VA 22209
www.langan.com

Project

# CONFIDENTIAL PROJECT

GEORGE WASHINGTON MEMORIAL PARKWAY
PAR03170001
WASHINGTON DISTRICT OF COLUMBIA

Drawing Title

# SITE PLAN

| | |
|---|---|
| Project No. 270228201 | Drawing No. CS101 |
| Date 05/22/2026 | |
| Drawn By AMF | |
| Checked By RCL | |

LANGAN
Project No. 001234501

©2016 Langan

Date: 5/22/2026 Time: 17:34 User: tarvin Style Table: Langan.stb Layout: Layout1 Document Code: 270228201-0301-CS101-0101

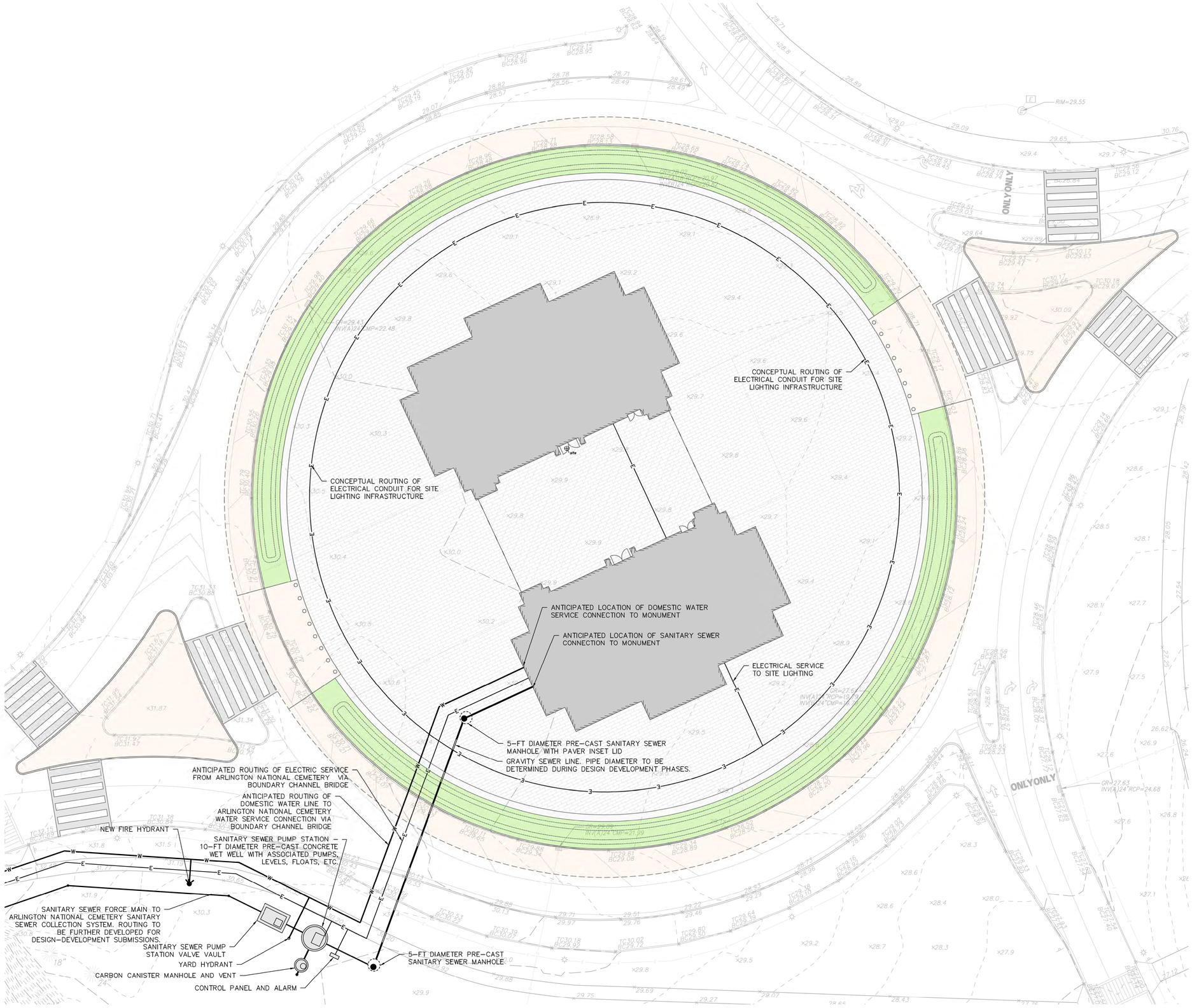


UTILITY PLAN NOTES:

1. CONTRACTOR SHALL REFER TO ARCHITECTURAL AND MEP PLANS AND SPECIFICATIONS FOR ACTUAL LOCATIONS OF ALL UTILITY ENTRANCES TO THE STRUCTURE. CONTRACTOR SHALL COORDINATE INSTALLATION OF UTILITIES IN SUCH A MANNER AS TO AVOID CONFLICTS AND ASSURE PROPER DEPTHS ARE ACHIEVED.
2. THE CONTRACTOR SHALL FIELD VERIFY ALL EXISTING CONDITIONS, UTILITY LOCATIONS, AND INVERTS PRIOR TO CONSTRUCTION. ANY CONDITIONS FOUND TO DIFFER FROM THOSE SHOWN BY THE DRAWINGS SHALL BE IMMEDIATELY BROUGHT TO THE ATTENTION OF THE ENGINEER.
3. ALL SANITARY SEWER AND WATER LINE WORK SHALL BE IN ACCORDANCE WITH THE REQUIREMENTS OF THE AUTHORITY HAVING JURISDICTION (DC WATER, ARLINGTON NATIONAL CEMETERY, NATIONAL PARK SERVICE, AND/OR ARLINGTON COUNTY.
4. ALL PLANS SHALL BE SUBMITTED TO ALL AHJs FOR REVIEW AND APPROVAL AS PART OF THE DESIGN DEVELOPMENT AND PERMITTING PROCESS.
5. CONTRACTOR SHALL PERFORM TEST PITS AT THE LOCATIONS OF ALL PROPOSED UTILITY CROSSINGS.
6. ALL UTILITY INFRASTRUCTURE THAT IS INSTALLED ABOVE GRADE (IE. SUSPENDED FROM BRIDGES) SHALL BE INSTALLED WITH INSULATION AND/OR HEAT TRACE TAPE TO ASSURE YEAR ROUND SYSTEM FUNCTIONALITY.
7. DOMESTIC WATER DEMANDS AND SANITARY SEWER LOADS HAVE NOT YET BEEN DEVELOPED BY THE MEP ENGINEER AND THE PROPOSED INFRASTRUCTURE HAS NOT YET BEEN SIZED.

SCALE: 1 INCH = 20 FEET

| Date | Description | No. |
|---|---|---|
| Revisions | | |

Signature Date


LANGAN
Langan Engineering and Environmental Services, LLC
1300 Wilson Blvd
Arlington, VA 22209
www.langan.com


Project

CONFIDENTIAL PROJECT

GEORGE WASHINGTON MEMORIAL PARKWAY
PAR03170001
WASHINGTON DISTRICT OF COLUMBIA

Drawing Title

UTILITY PLAN

| | |
|---|---|
| Project No. 270228201 | Drawing No. CU101 |
| Date 05/22/2026 | |
| Drawn By AMF | |
| Checked By RCL | |

LANGAN
Project No. 001234501

© 2018 Langan

NPS PMIS No. XXXXXX NPS Drwg No. XXX/XXXX

| PROJECT | SHEET NUMBER |
|---|---|
| DC NP GWMP ARCH TAR 2026 | A01 |

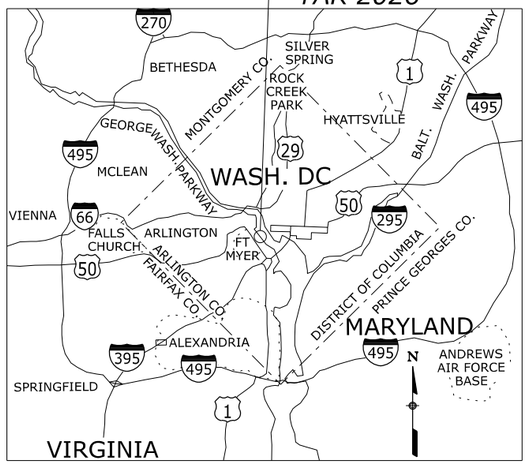


**KEYMAP**
**WASHINGTON DC**
**AND METROPOLITAN AREA**

# U. S. DEPARTMENT OF THE INTERIOR
# NATIONAL PARK SERVICE
# GEORGE WASHINGTON MEMORIAL PARKWAY
# NATIONAL PARK

PLANS FOR PROPOSED PROJECT

# DC NP GWMP ARCH TAR 2026

SIGNAL INSTALLATION AROUND THE MEMORIAL CIRCLE
TEMPORARY TRAFFIC CONTROL FOR CONSTRUCTION OF THE ARCH

WASHINGTON,
DISTRICT OF COLUMBIA

## DESCRIPTION OF PROJECT

**IMPROVEMENT:** Work includes the signalization of memorial circle, construction of new sidewalk, pavement markings and signage, maintenance of traffic for the construction of the arch, and other miscellaneous work.

**PROJECT LENGTH:** 0.03 Miles

**LANE MILES:** 0.03 Miles

| ROAD: | WIDTH | SURFACE | BASE | SUBGRADE |
|---|---|---|---|---|
| Memorial Circle | 30' | 4" ACP | 6" | N/A |

**BRIDGE:** N/A

**DESIGN DESIGNATION:**

| | |
|---|---|
| GWMP ADT (2026) | 16716 |
| GWMP ADT (2046) | 22514 |
| DHV | 3 |
| D | 50/50 |
| %Truck | 0.10% |
| V (MPH) | 30 |
| C/A | None |
| e(max) | N/A |

**SPECIFICATIONS:**

"Standard Specifications for Construction of Roads and Bridges on Federal Highway Projects", FP-24.

| Project Manager | Highway Design Manager | Lead Designer |
|---|---|---|
| XXXXX XXXXXX | Chris Burnell | Team Forge |

***DC NP GWMP ARCH TAR 2026***

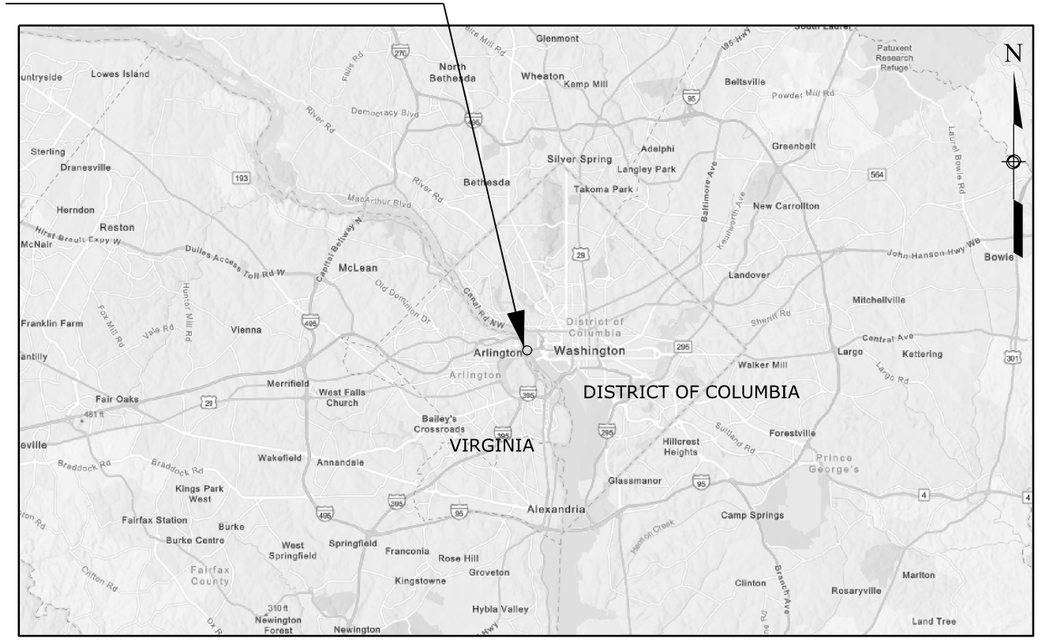


## INDEX TO SHEETS



| SHEET NO | DESCRIPTION |
|---|---|
| A01 | Title Sheet |
| A02-A03 | Symbols And Abbreviations |
| A04 | Location Map |
| B01-B03 | Typical Section |
| C01 | Tabulation of Quantities |
| D01-D05 | Plans |
| H01-H04 | Traffic Signal Plan |
| M01 | Erosion and Sediment Control Narrative |
| M02-M06 | Erosion and Sediment Plans |
| N01 | Temporary Traffic Control Narrative |
| N02-N09 | Temporary Traffic Control for Signal and Sidewalk Improvement |
| N10-N12 | Temporary Traffic Control for the Construction of the Arch |
| P01-P03 | Pavement Marking and Signing Plan |
| S01-S22 | Standards And Details |



Know what's **below.**
**Call** before you dig.

# 30% PLANS

PLANS PREPARED BY
**U.S. DEPARTMENT OF TRANSPORTATION**
**FEDERAL HIGHWAY ADMINISTRATION**
EASTERN FEDERAL LANDS HIGHWAY DIVISION
ASHBURN, VIRGINIA
MAY, 2026

M:\PROJECTS\gwmp\11(4)\Proj_Dev\CADD\AMC Arch\A01-Memorial Circle_ttl.dgn [Title Sheet NPS]
21 May 2026 6:11 PM

| PROJECT | SHEET NUMBER |
|---|---|
| DC NP GWMP ARCH TAR 2026 | A02 |

| | |
|---|---|
| Δ | total central angle |
| Δc | curve central angle |
| Ø | diameter |
| θs | spiral central angle |
| abut. | abutment |
| ACP | asphalt concrete pavement |
| ADT | average daily traffic |
| Agg | aggregate |
| AH | ahead |
| AMD | amendment |
| appr. | approach |
| ASC | aggregate surface course |
| Asph | asphalt |
| BK | back |
| BL | baseline |
| bldg. | building |
| BM | bench mark |
| BP | balance point |
| br. | bridge |
| brg. | bearing |
| BW | broken white |
| cc or c. to c. | center to center |
| CL | centerline |
| CMP | corrugated metal pipe |
| col. | column |
| conc. | concrete |
| conn. | connection |
| constr. jt. | construction joint |
| cont. | continuous |
| CS | curve to spiral |
| ctrs. | centers |
| D | directional distribution factor |
| DHV | design hourly volume |
| dia. | diameter |
| diag. | diagonal |
| diaph. | diaphragm |
| dist. | distance |
| drwg(s). | drawing(s) |
| DSY | double solid yellow |
| DW or DTW | dotted white |
| DY or DTY | dotted yellow |
| E | east |
| e | superelevation rate |
| elec. | electric |
| elev. | elevation |
| emb. | embankment |
| EOP | edge of pavement |
| EOS | edge of shoulder |
| EOT | edge of travel way |
| EQ or eq. | equation |
| ER | edge of road |
| ESAL | equivalent single axle load |
| EW | edge of water |
| ex. or exist. | existing |
| exc. | excavation |
| exp. jt. | expansion joint |
| fin. | finish |
| flg. | flange |
| ftg. | footing |
| ga. | gage (gauge) |
| GAB | graded aggregate base |
| galv. | galvanized |
| gnd or grnd | ground |
| hdwl. | headwall |
| hex. | hexagon |
| HLSD | headlight sight distance |
| HW | high water |
| ID | inside diameter |
| INF | infinite |
| inv. | invert |
| jt. | joint |
| K | K-Value |
| L | length of curve |
| lam. | lamination |
| lat. | latitude |
| LOD | Limits of Disturbance |
| long. | longitudinal |
| LPSM | lump sum |
| Ls | length of spiral |
| lt. or LT | left |
| LW | low water |
| ML | main line |
| MOD | modification |
| MP | mile post |
| max. | maximum |
| min. | minimum |
| mon. | monument |
| N | north |
| NC | normal crown |
| NMSA | nominal maximum size aggregate |
| No. | number |
| o. c. | on center |
| ohwm | ordinary high water mark |
| o. to o. | out to out |
| OD | outside diameter |
| OG | original ground |
| PC | point of curve |
| PCC | point of compound curve |
| PCS | point of curve to spiral |
| PGL | profile grade line |
| PI | point of intersection |
| pl. | plate |
| POB | point of beginning |
| POC | point on curve |
| POE | point of ending |
| POS | point on spiral |
| POT | point on tangent |
| prop. | proposed |
| PS | point of tangent to spiral |
| PSC | point of spiral to curve |
| PST | point of spiral to tangent |
| PT | point of tangent |
| pvmt. | pavement |
| R | radius |
| R. | range |
| R/W | right-of-way |
| rdwy. | roadway |
| RECP | rolled erosion control product |
| reinf. | reinforcement |
| reqd. | required |
| rt. or RT | right |
| rte. | route |
| S | south |
| SADT | seasonal average daily traffic |
| SC | point of spiral to curve |
| sec. | section |
| shldr. | shoulder |
| spa. | spacing, spaces or spaced |
| sqft | square foot |
| sqyd | square yard |
| SRS | point of spiral to reverse spiral |
| SS | point of spiral to spiral (no curve) |
| SSD | stopping sight distance |
| ST | point of spiral to tangent |
| Sta. | station |
| std. | standard |
| stgr. | stringer |
| stiff. | stiffener |
| struc. | structural |
| STS | point of spiral to tangent spiral |
| SW or SDW | solid white |
| sym. | symmetrical |
| S/W | sidewalk |
| T | tangent distance |
| T. | township |
| TBM | temporary bench mark |
| thd. | thread |
| traf. | traffic |
| TS | point of tangent to spiral |
| Ts | tangent distance (spiraled curve) |
| typ. | typical |
| V | design speed |
| VC | vertical curve |
| var. | varies |
| vph | vehicles per hour |
| VPI | vertical point of intersection |
| W | west |

Control Point (Terrestrial and GPS); Jump Hub

National Boundary

State Boundary

County Boundary

City Boundary

Township or Range Line

Section Line

Section Corner (Found, Projected)

¼ Section Line

¼ Section Corner (Found, Projected)

1/16 Section Line

1/16 Section Corner (Found, Projected)

Property Line w/Found Property Corner

Parcel Number

National Park Boundary

National Forest Boundary

National Wildlife Refuge Boundary

BLM Lands Boundary

Indian Reservation Boundary

Existing Roadway (Road, Paved, Gravel)

Railroad

Trail

Intermittent Drainage or Small Creek

Large Creek or River

Lake, Pond or Reservoir

Spring or Seep

Treeline; Individual Trees

Material Source; Bore Hole; Test Pit

Spot Elevation; Coordinate Grid Tick

| NO. | DATE | BY | REVISIONS |
|---|---|---|---|
| | | | |
| | | | |
| | | | |
| | | | |

U.S. DEPARTMENT OF TRANSPORTATION
FEDERAL HIGHWAY ADMINISTRATION
OFFICE OF FEDERAL LANDS HIGHWAY

GEORGE WASHINGTON MEMORIAL PARKWAY

# SYMBOLS AND ABBREVIATIONS



M:\PROJECTS\gwmp\11(4)\Proj_Dev\CADD\ANC Arch\A02-A03-Memorial Circle_sym.dgn [SHEET 1]
21 May 2026 6:11 PM

| PROJECT | SHEET NUMBER |
|---|---|
| DC NP GWMP ARCH TAR 2026 | A03 |

North Arrow

| | | EXISTING | PROPOSED |
|---|---|---|---|
| Slope Stake Limits | Top of Cut | | |
| | Toe of Fill | | |
| | Transition | | |
| Fence | | | |
| Gate with Fence | | | |
| Cattleguard | | | |
| Guardrail | | | |
| Concrete Barrier | | | |
| Retaining Wall | | | |
| Signs (single, double post; portable) | | | |
| Delineators | | | |
| Pipe Culvert (arrow shows flow) | | | |
| Pipe Culvert with End Section | | | |
| Pipe Culvert with Headwall | | | |
| Pipe Culvert with Drop Inlet | | | DI |
| Box Culvert | | | |
| Underdrain | | UD | UD |
| Overhead/Above Ground Utilities | | P | P |
| Underground Utilities | | W | W |

FM = force main, FO = fiber optic, G = gas, IRR = irrigation, O = oil,
P = power, SA = sanitary sewer, SD = storm drain, SS = storm sewer,
STEAM = steam, T = telephone, TV = CATV, W = water

Poles (Power, Telephone, Joint Use, Light, Support w/Anchor)

Miscellaneous Utility Features

EM = electric meter, T = telephone pedestal, TV = CATV pedestal,
UP = transformer or junction box, WF = water fountain

Building

Right-of-Way Line with Monument — r/w — R/W

Permanent Easement — P/E — P/E

Construction Easement — TCE

Riprap

AREA PATTERN

Pavement Removal / Roadway Obliteration

Sidewalk Asphalt/Concrete

Mill and Overlay

Overlay

Silt Fence — SF

Diversion Berm — DB

Drainage Divide

Check Dam

Limits of Disturbance — LOD LOD LOD

Fiber Roll or Wattle

PROJECT SPECIFIC SYMBOLS AND ABBREVIATIONS:

Proposed Traffic Signal Pole

Proposed Pedestrian Pedestal

| | |
|---|---|
| DW | Dotted white |
| SSW | Single solid white |
| SSY | Single solid yellow |
| RPM | Raised Pavement Markers |

M:\PROJECTS\gwmp\111(4)\Proj_Dev\CADD\AMC Arch\A02-A03-Memorial Circle_sym.dgn [SHEET 2]

21 May 2026 6:11 PM

| NO. | DATE | BY | REVISIONS |
|---|---|---|---|
| | | | |
| | | | |
| | | | |
| | | | |

U.S. DEPARTMENT OF TRANSPORTATION
FEDERAL HIGHWAY ADMINISTRATION
OFFICE OF FEDERAL LANDS HIGHWAY

GEORGE WASHINGTON MEMORIAL PARKWAY

# SYMBOLS AND ABBREVIATIONS

NPS PMIS No. XXXXXX NPS Drwg No. XXX/XXXX

| PROJECT | SHEET NUMBER |
|---|---|
| DC NP GWMP ARCH TAR 2026 | A04 |

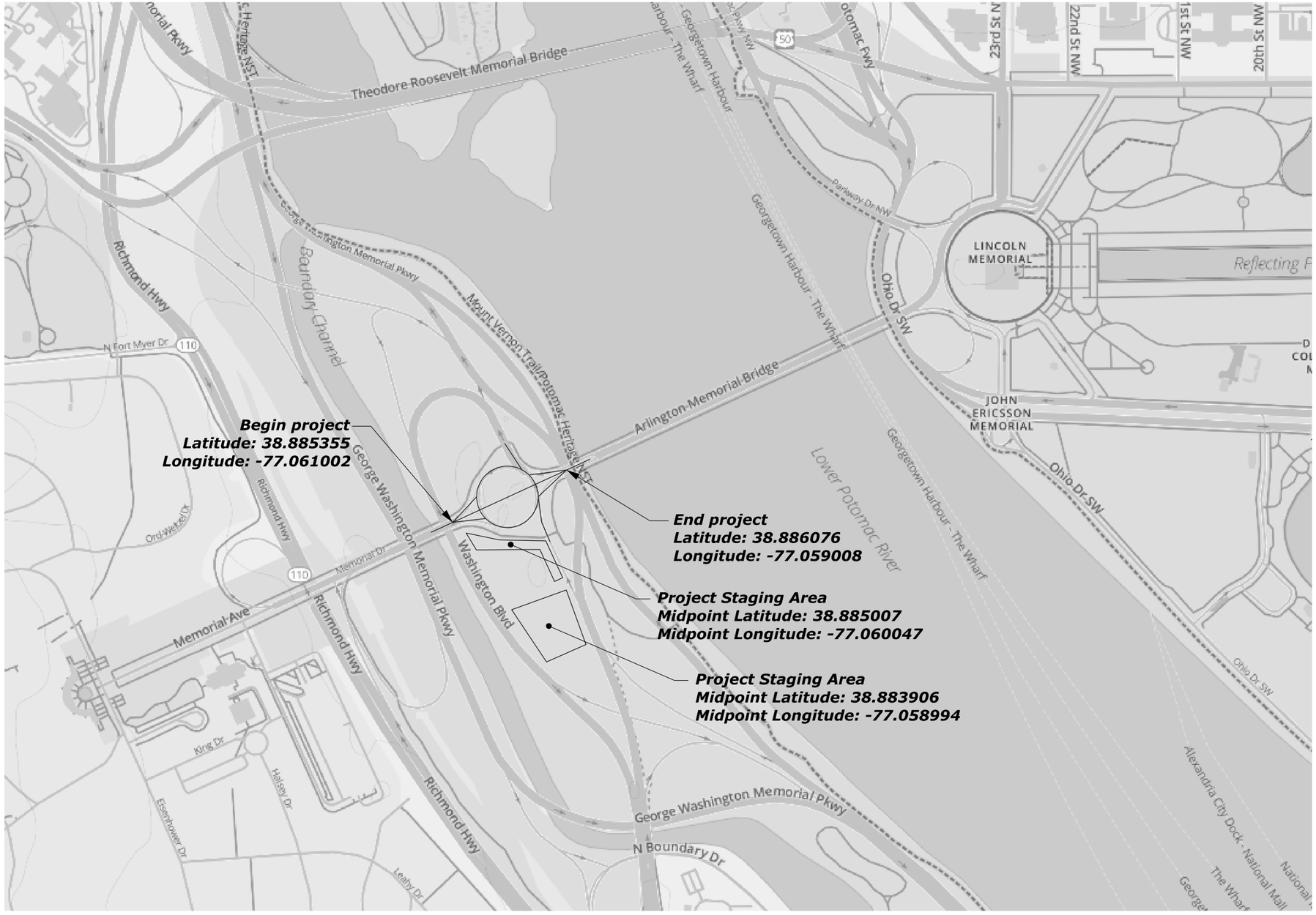


*Note:*
*Final staging area limits as directed.*

| NO. | DATE | BY | REVISIONS |
|---|---|---|---|
| | | | |
| | | | |
| | | | |
| | | | |

U.S. DEPARTMENT OF TRANSPORTATION
FEDERAL HIGHWAY ADMINISTRATION
OFFICE OF FEDERAL LANDS HIGHWAY

*NO SCALE*

GEORGE WASHINGTON MEMORIAL PARKWAY

# LOCATION MAP

M:\PROJECTS\gwmp\11(4)\Proj_Dev\CADD\ANC Arch\A04-Memorial Circle_loc.dgn [Location SHEET]
21 May 2026 7:04 PM

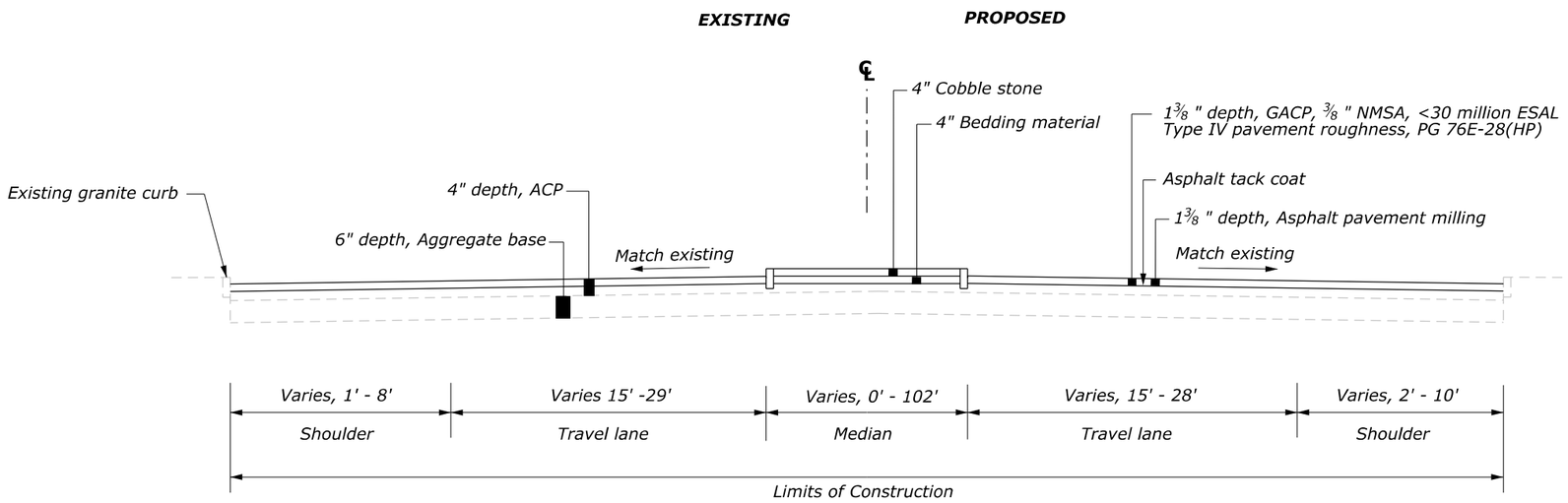


## MEMORIAL AVENUE BRIDGE TO MEMORIAL CIRCLE

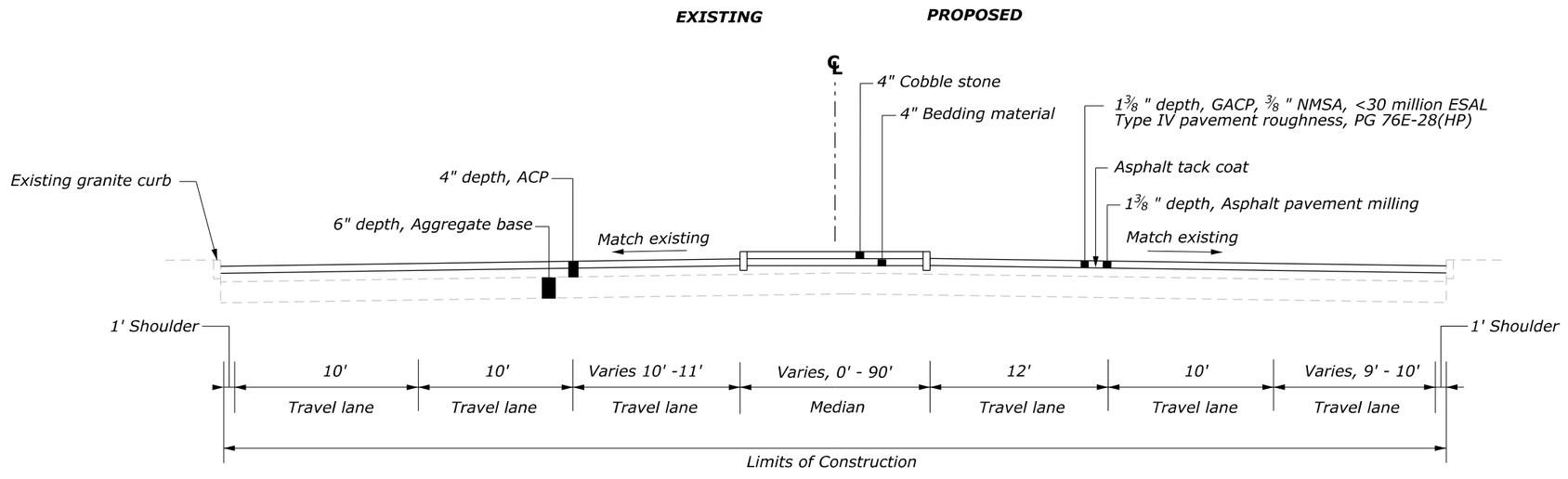


## MEMORIAL CIRCLE TO ARLINGTON MEMORIAL BRIDGE

| NO. | DATE | BY | REVISIONS |
|---|---|---|---|
| | | | |
| | | | |
| | | | |
| | | | |

U.S. DEPARTMENT OF TRANSPORTATION
FEDERAL HIGHWAY ADMINISTRATION
OFFICE OF FEDERAL LANDS HIGHWAY

GEORGE WASHINGTON MEMORIAL PARKWAY

# TYPICAL SECTIONS

MEMORIAL CIRCLE, ARLINGTON MEMORIAL BRIDGE
SCHEDULE A

M:\PROJECTS\gwmp\111(4)\Proj_Dev\CADD\AMC Arch\B01-Memorial Circle_typ.dgn [Design InfiPl]
21 May 2026 6:13 PM

| PROJECT | SHEET NUMBER |
|---|---|
| DC NP GWMP ARCH TAR 2026 | B02 |

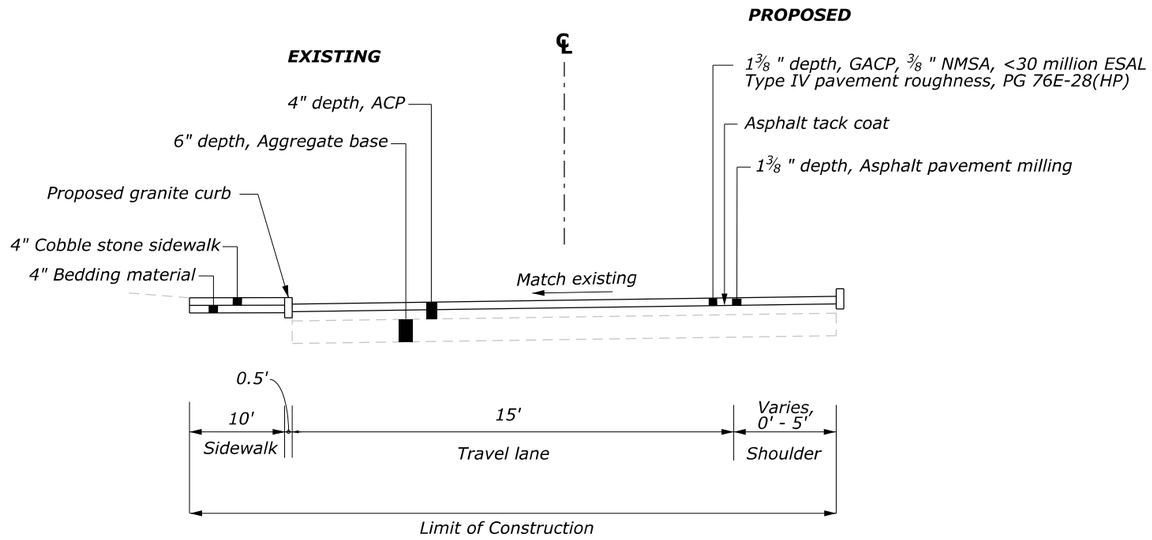


## MEMORIAL CIRCLE

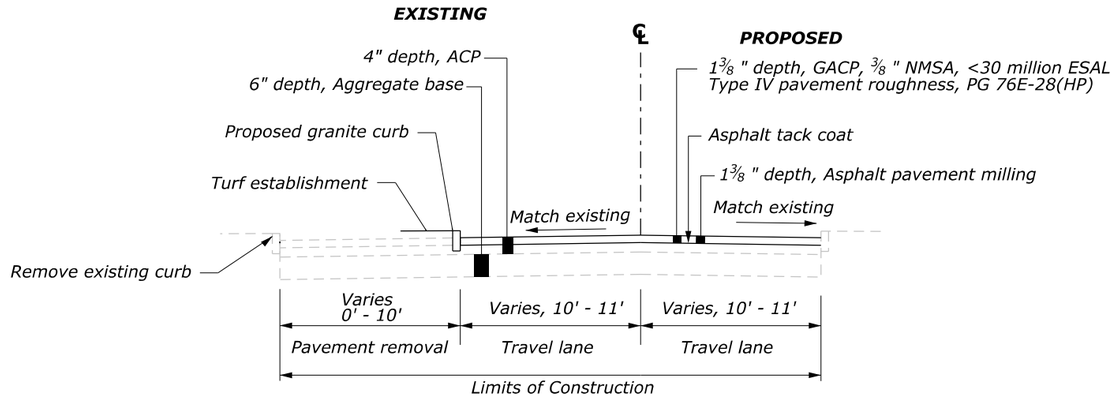


## WASHINGTON BLVD

| NO. | DATE | BY | REVISIONS |
|---|---|---|---|
| | | | |
| | | | |
| | | | |
| | | | |

U.S. DEPARTMENT OF TRANSPORTATION
FEDERAL HIGHWAY ADMINISTRATION
OFFICE OF FEDERAL LANDS HIGHWAY

GEORGE WASHINGTON MEMORIAL PARKWAY

# TYPICAL SECTIONS

MEMORIAL CIRCLE, WASHINGTON BLVD
SCHEDULE A

M:\PROJECTS\gwmp\111(4)\Proj_Dev\CADD\AMC Arch\B01-Memorial Circle_typ.dgn [Design InfiPt]
21 May 2026 6:13 PM

NPS PMIS No. XXXXXX NPS Drwg No. XXX/XXXX

| PROJECT | SHEET NUMBER |
|---|---|
| DC NP GWMP ARCH TAR 2026 | B03 |

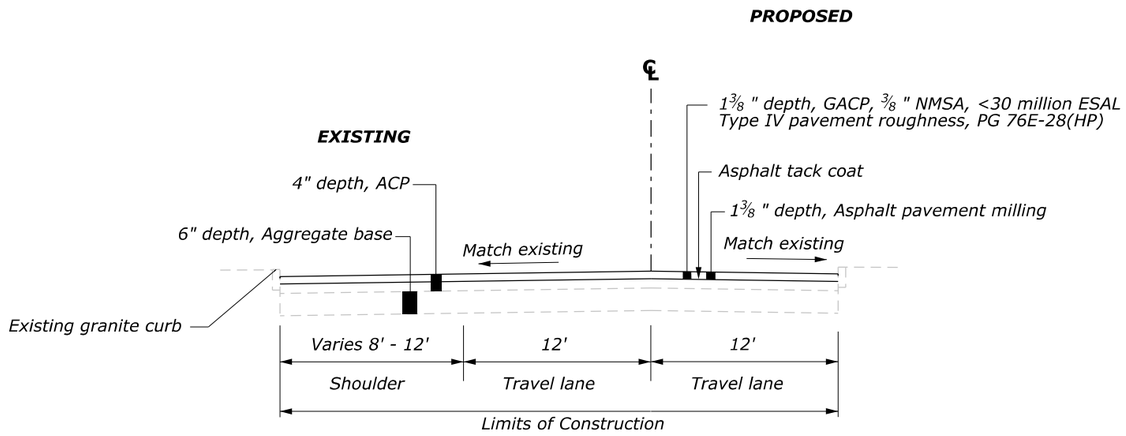


## ARLINGTON BLVD

M:\PROJECTS\gwmp\111(4)\Proj_Dev\CADD\AMC Arch\801-Memorial Circle_typ.dgn [Design Ind#1]

21 May 2026 6:13 PM

| NO. | DATE | BY | REVISIONS |
|---|---|---|---|
| | | | |
| | | | |
| | | | |
| | | | |

U.S. DEPARTMENT OF TRANSPORTATION
FEDERAL HIGHWAY ADMINISTRATION
OFFICE OF FEDERAL LANDS HIGHWAY

GEORGE WASHINGTON MEMORIAL PARKWAY

# TYPICAL SECTIONS

ARLINGTON BLVD

SCHEDULE A

| PROJECT | SHEET NUMBER |
|---|---|
| DC NP GWMP ARCH TAR 2026 | C01 |

## SCHEDULE A

| Line Item No. | Pay Item No. | Pay Item Description | Unit | Estimated Quantities |
|---|---|---|---|---|
| | | | | Bid Schedule |
| A0100 | 15101-0000 | MOBILIZATION | LPSM | ALL |
| A0150 | 15201-0000 | CONSTRUCTION SURVEY AND STAKING | LPSM | ALL |
| A0200 | 15401-0000 | CONTRACTOR TESTING | LPSM | ALL |
| A0250 | 15701-0000 | SOIL EROSION CONTROL | LPSM | ALL |
| A0300 | 15720-0000 | STORMWATER POLLUTION PREVENTION PLAN | LPSM | ALL |
| A0350 | 20301-2400 | REMOVAL OF SIGN | EACH | 32 |
| A0400 | 20302-0600 | REMOVAL OF CURB, STONE | LNFT | 2,600 |
| A0450 | 20303-0500 | REMOVAL OF GRANITE COBBLES | SQYD | 1,700 |
| A0500 | 20303-1600 | REMOVAL OF PAVEMENT, ASPHALT | SQYD | 1,400 |
| A0550 | 20303-3200 | REMOVAL OF SIDEWALK, CONCRETE | SQYD | 2,100 |
| A0600 | 20303-3300 | REMOVAL OF SIDEWALK, STONE | SQYD | 60 |
| A0650 | 31302-0000 | AGGREGATE-TOPSOIL COURSE | SQYD | 1,200 |
| A0700 | 40101-0200 | ASPHALT CONCRETE PAVEMENT, GYRATORY MIX, 3/8-INCH NOMINAL MAXIMUM SIZE AGGREGATE, 0.3 TO <3 MILLION ESAL | TON | 510 |
| A0750 | 41201-0000 | TACK COAT | TON | 4 |
| A0800 | 41301-0000 | ASPHALT PAVEMENT MILLING | SQYD | 6,800 |
| A0850 | 60901-4000 | CURB, STONE, TYPE 1, 16-INCH DEPTH | LNFT | 3,000 |
| A0900 | 61001-0500 | SIDEWALK, EXPOSED AGGREGATE CONCRETE | SQYD | 2,300 |
| A0950 | 61004-4000 | ACCESSIBILITY RAMP, STONE | SQYD | 370 |
| A1000 | 61006-2000 | PAVING, COBBLESTONE | SQYD | 1,950 |
| A1050 | 61008-0100 | RESET COBBLESTONE PAVERS | SQYD | 1,150 |
| A1100 | 62502-0000 | TURF ESTABLISHMENT | SQYD | 1,050 |
| A1150 | 63304-0900 | SIGNS, ALUMINUM PANELS, TYPE 3 SHEETING | SQFT | 16 |
| A1200 | 63316-1000 | REMOVE AND RESET SIGN SYSTEM | EACH | 2 |
| A1250 | 63401-1500 | PAVEMENT MARKINGS, TYPE H, SOLID | LNFT | 19,900 |
| A1300 | 63401-1650 | PAVEMENT MARKINGS, TYPE H, DOTTED | LNFT | 24 |
| A1350 | 63405-2900 | PAVEMENT MARKINGS, TYPE H, TURN ARROW | EACH | 4 |
| A1400 | 63405-2950 | PAVEMENT MARKINGS, TYPE H, STRAIGHT ARROW | EACH | 1 |
| A1450 | 63405-3000 | PAVEMENT MARKINGS, TYPE H, STRAIGHT/TURN ARROW COMBINATION | EACH | 3 |
| A1500 | 63405-3050 | PAVEMENT MARKINGS, TYPE H, "ONLY" WORD MESSAGE | EACH | 4 |
| A1550 | 63406-0300 | RAISED PAVEMENT MARKER, NON-PLOWABLE, MONO-DIRECTIONAL REFLECTIVE | EACH | 12 |
| A1600 | 63501-0000 | TEMPORARY TRAFFIC CONTROL | LPSM | ALL |
| A1650 | 63602-1000 | SYSTEM INSTALLATION, TRAFFIC SIGNAL | EACH | 48 |
| A1700 | 63701-0000 | FIELD OFFICE | EACH | 1 |

| NO. | DATE | BY | REVISIONS |
|---|---|---|---|
| | | | |
| | | | |
| | | | |
| | | | |

U.S. DEPARTMENT OF TRANSPORTATION
FEDERAL HIGHWAY ADMINISTRATION
OFFICE OF FEDERAL LANDS HIGHWAY

GEORGE WASHINGTON MEMORIAL PARKWAY

**TABULATION OF QUANTITIES**
SCHEDULE A

M:\PROJECTS\gwmp\11(4)\Proj_Dev\CADD\AMC Arch\C01-Memorial Circle_qty.dgn [Quantity Tabulation Sheet]
21 May 2026 7:31 PM

| PROJECT | SHEET NUMBER |
|---|---|
| | D02 |

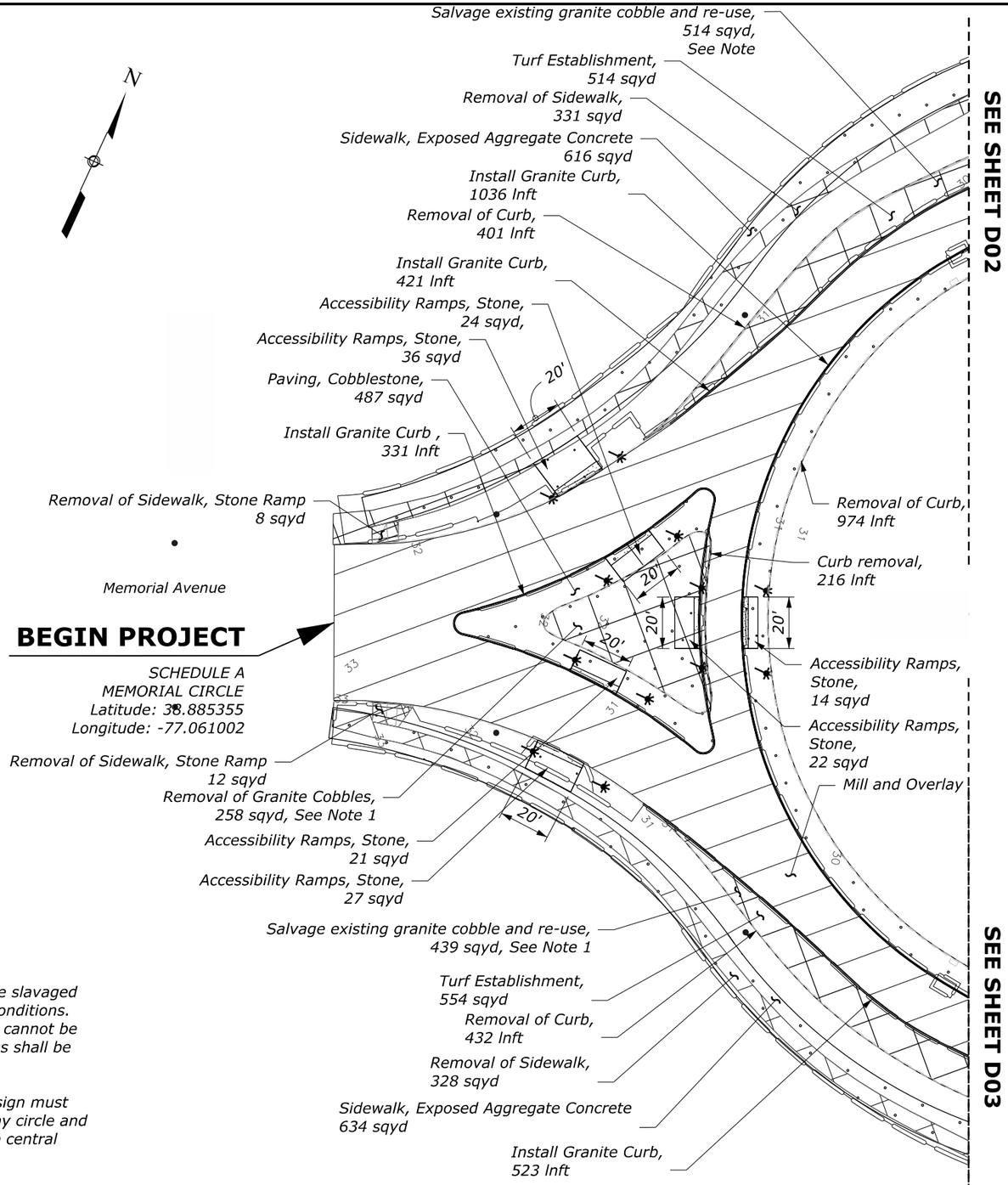


## NOTES

1. *All existing granite cobbles are to be slavaged and re-used as shown in poposed conditions. If the cobbles are not salvagable or cannot be used in proposed conditions, cobbles shall be returned to the NPS.*

2. *Utility and drainage layouts and design must be coordinated between the roadway circle and any planned construction within the central island.*

| NO. | DATE | BY | REVISIONS |
|---|---|---|---|
| | | | |
| | | | |
| | | | |
| | | | |

U.S. DEPARTMENT OF TRANSPORTATION
FEDERAL HIGHWAY ADMINISTRATION
OFFICE OF FEDERAL LANDS HIGHWAY

0 25 50
SCALE IN FEET

# CONSTRUCTION PLAN

MEMORIAL CIRCLE

M:\PROJECTS\gwmp\11(4)\Proj_Dev\CADD\AMC Arch\D_sheets_MemorialCircle.dgn [D01 (SHEET)]
21 May 2026 6:46 PM

| PROJECT | SHEET NUMBER |
|---|---|
| | D02 |

## NOTES

1. *All existing granite cobbles are to be slavaged and re-used as shown in poposed conditions. If the cobbles are not salvagable or cannot be used in proposed conditions, cobbles shall be returned to the NPS.*

2. *Utility and drainage layouts and design must be coordinated between the roadway circle and any planned construction within the central island.*

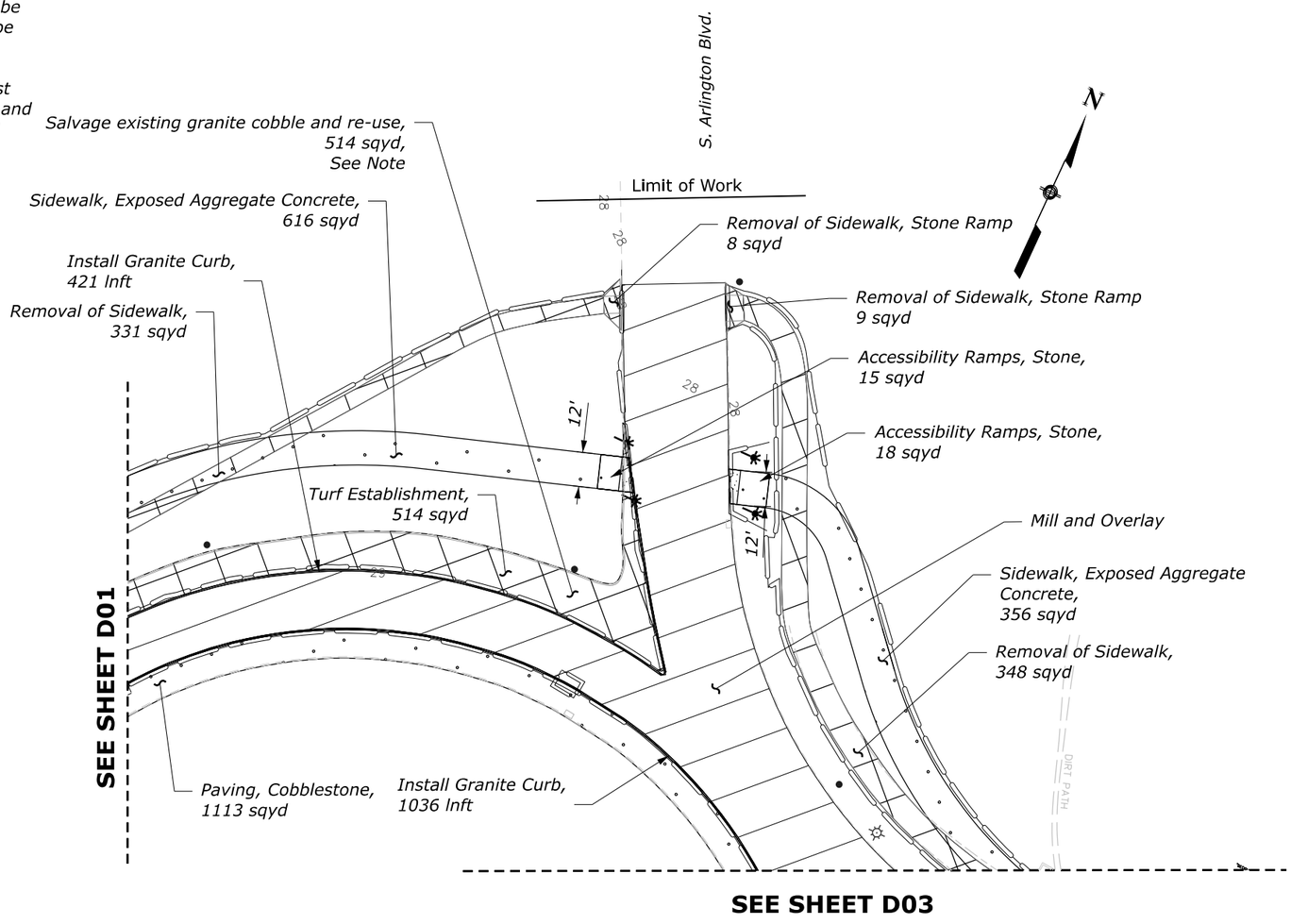


| NO. | DATE | BY | REVISIONS |
|---|---|---|---|
| | | | |
| | | | |
| | | | |
| | | | |

U.S. DEPARTMENT OF TRANSPORTATION
FEDERAL HIGHWAY ADMINISTRATION
OFFICE OF FEDERAL LANDS HIGHWAY

0 25 50
SCALE IN FEET

# CONSTRUCTION PLAN

MEMORIAL CIRCLE

S. ARLINGTON BLVD

M:\PROJECTS\gwmp\111(4)\Proj_Dev\CADD\AMC Arch\D_sheets_Memorial Circle.dgn [D02 SHEET]
21 May 2026 6:46 PM

| PROJECT | SHEET NUMBER |
|---|---|
| | D03 |

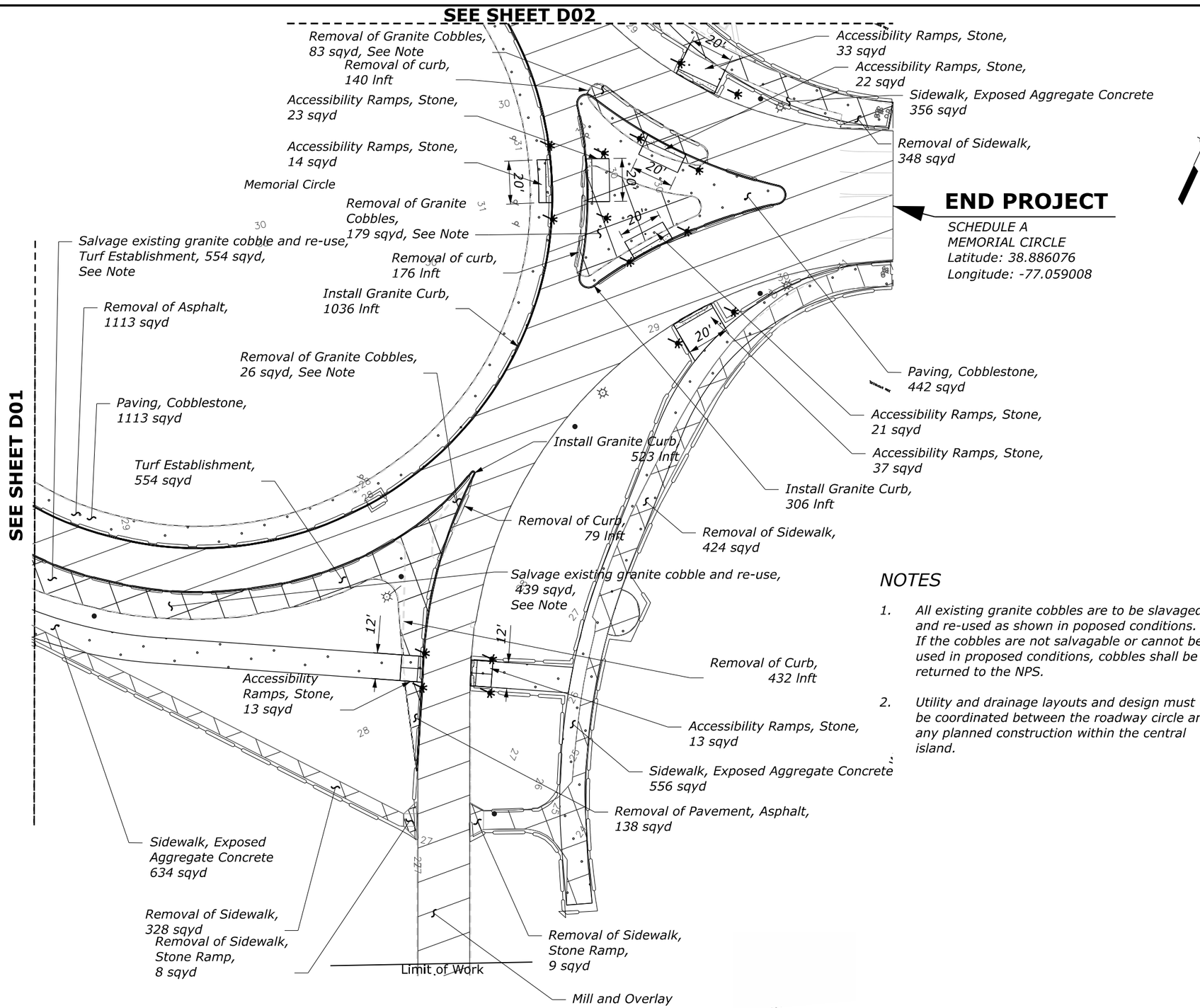


## NOTES

1. All existing granite cobbles are to be slavaged and re-used as shown in poposed conditions. If the cobbles are not salvagable or cannot be used in proposed conditions, cobbles shall be returned to the NPS.
2. Utility and drainage layouts and design must be coordinated between the roadway circle and any planned construction within the central island.

| NO. | DATE | BY | REVISIONS |
|---|---|---|---|
| | | | |
| | | | |
| | | | |
| | | | |

U.S. DEPARTMENT OF TRANSPORTATION
FEDERAL HIGHWAY ADMINISTRATION
OFFICE OF FEDERAL LANDS HIGHWAY

0 25 50
SCALE IN FEET

# CONSTRUCTION PLAN

MEMORIAL CIRCLE
WASHINGTON BLVD

M:\PROJECTS\gwmp\11(4)\Proj_Dev\CADD\ANC Arch\D_sheets_Memorial Circle.dgn [D03 (SHEET)]
21 May 2026 6:46 PM

NPS PMIS No. XXXXXX NPS Drwg No. XXX/XXXX

| PROJECT | SHEET NUMBER |
|---|---|
| DC NP GWMP ARCH TAR 2026 | H01 |

*NOTES*

1. *Install traffic signal poles 4' from the back of curb.*
2. *Install pedestrian pushbutton pedestals 2.5' by 4' from the edge of curb ramp.*

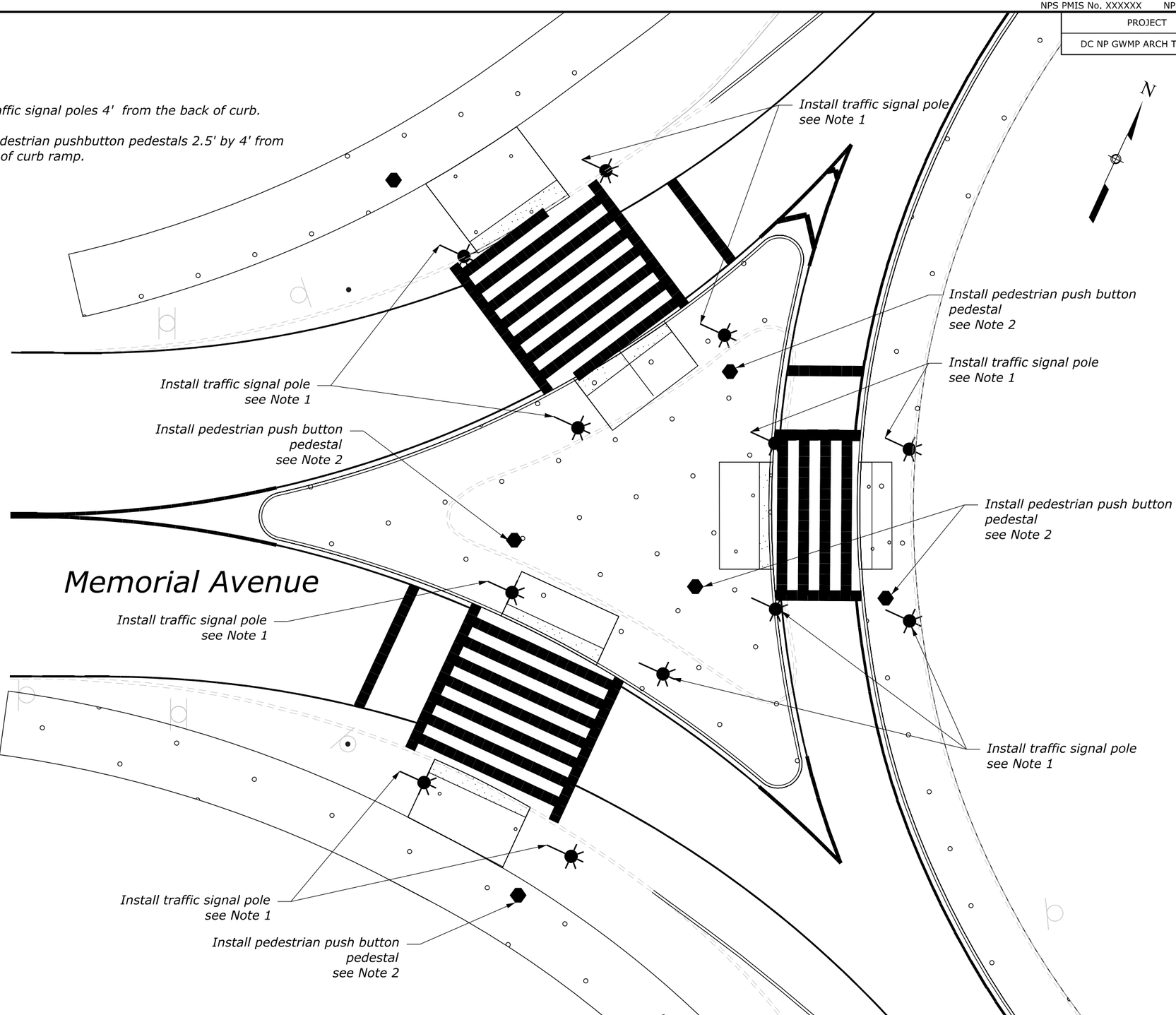


| NO. | DATE | BY | REVISIONS |
|---|---|---|---|
| | | | |
| | | | |
| | | | |
| | | | |

U.S. DEPARTMENT OF TRANSPORTATION
FEDERAL HIGHWAY ADMINISTRATION
OFFICE OF FEDERAL LANDS HIGHWAY

0 10 20
SCALE IN FEET

GEORGE WASHINGTON MEMORIAL PARKWAY

# TRAFFIC SIGNAL PLAN

MEMORIAL AVENUE
MEMORIAL CIRCLE

M:\PROJECTS\gwmp\11(4)\Proj_Dev\CADD\AMC Arch\H01-H04_Memorial Circle.dgn [H01 (Sheet)]
21 May 2026 6:35 PM

NPS PMIS No. XXXXXX NPS Drwg No. XXX/XXXX

| PROJECT | SHEET NUMBER |
|---|---|
| DC NP GWMP ARCH TAR 2026 | H02 |

## NOTES

1. Install traffic signal poles 4' from the back of curb.
2. Install pedestrian pushbutton pedestals 2.5' by 4' from the edge of curb ramp.

Install traffic signal pole see Note 1

Install pedestrian push button pedestal see Note 2

Install traffic signal pole see Note 1

Install pedestrian push button pedestal see Note 2

Install pedestrian push button pedestal see Note 2

Install traffic signal pole see Note 1

Install traffic signal pole see Note 1

Install pedestrian push button pedestal see Note 2

Install pedestrian push button pedestal see Note 2

N

"DECIDUOUS TREE"

"DECIDUOUS TREE"

"DECIDUOUS TREE"

"DECIDUOUS TREE"

"DECIDUOUS TREE"

"DECIDUOUS TREE"

ONLY

ONLY

Washington

Arlington Memorial Bridge

M:\PROJECTS\gwmp\11(4)\Proj_Dev\CADD\AMC Arch\H01-H04_Memorial Circle.dgn [H02 (Sheet)]

21 May 2026 6:35 PM

| NO. | DATE | BY | REVISIONS |
|---|---|---|---|
| | | | |
| | | | |
| | | | |
| | | | |

U.S. DEPARTMENT OF TRANSPORTATION
FEDERAL HIGHWAY ADMINISTRATION
OFFICE OF FEDERAL LANDS HIGHWAY

0 10 20
SCALE IN FEET

GEORGE WASHINGTON MEMORIAL PARKWAY

# TRAFFIC SIGNAL PLAN

MEMORIAL CIRCLE
ARLINGTON MEMORIAL BRIDGE

NPS PMIS No. XXXXXX NPS Drwg No. XXX/XXXX

| PROJECT | SHEET NUMBER |
|---|---|
| DC NP GWMP ARCH TAR 2026 | H03 |

*NOTES*

1. *Install traffic signal poles 4' from the back of curb.*
2. *Install pedestrian pedestals 2.5' from the curb ramp, placed adjacent to the sidewalk.*

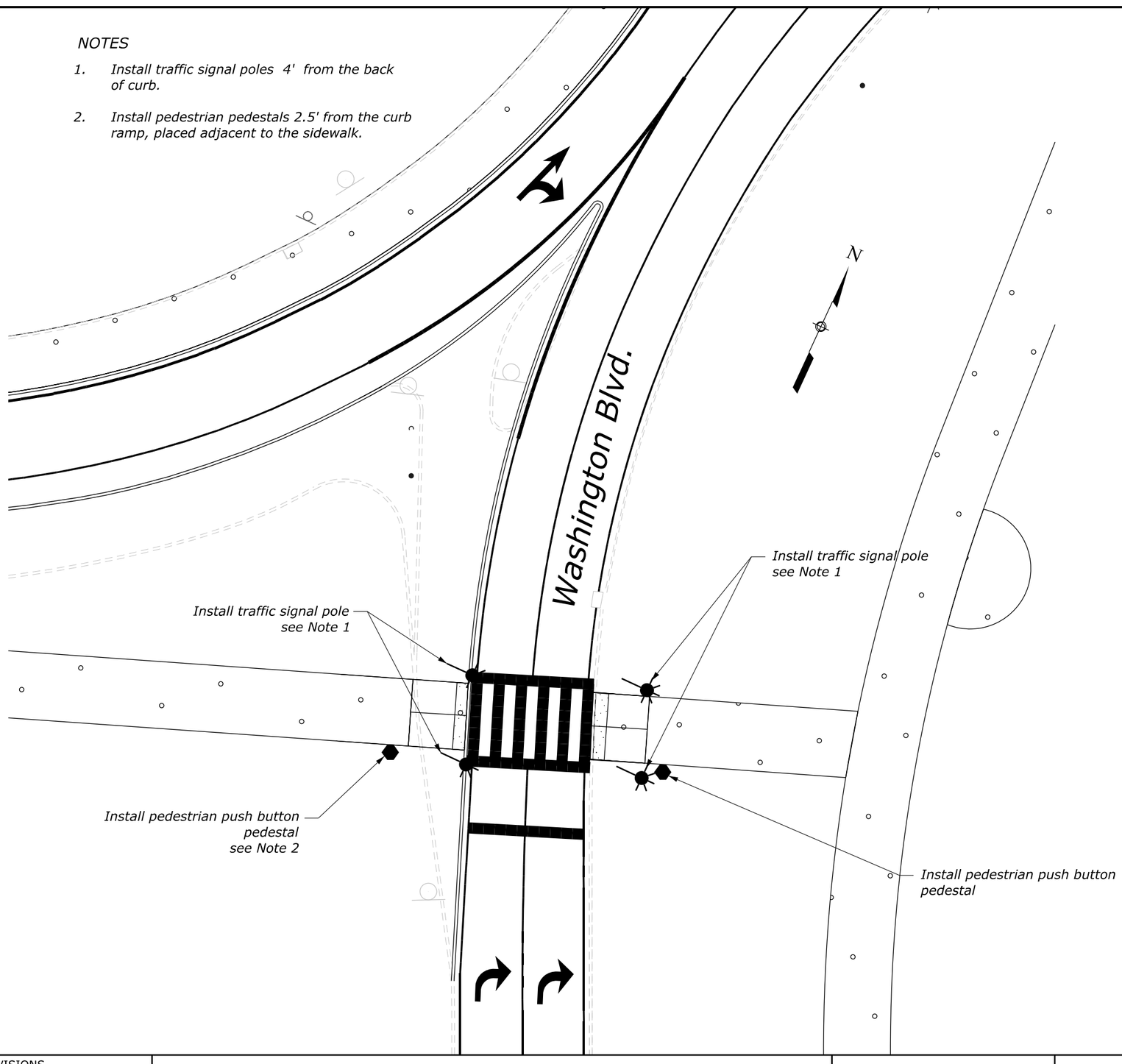


| NO. | DATE | BY | REVISIONS |
|---|---|---|---|
| | | | |
| | | | |
| | | | |
| | | | |

U.S. DEPARTMENT OF TRANSPORTATION
FEDERAL HIGHWAY ADMINISTRATION
OFFICE OF FEDERAL LANDS HIGHWAY

0 10 20
SCALE IN FEET

GEORGE WASHINGTON MEMORIAL PARKWAY

# TRAFFIC SIGNAL PLAN

WASHINGTON BLVD

M:\PROJECTS\gwmp\11(4)\Proj_Dev\CADD\AMC Arch\H01-H04_Memorial Circle.dgn [H03 (Sheet)]
21 May 2026 6:35 PM

NPS PMIS No. XXXXXX NPS Drwg No. XXX/XXXX

| PROJECT | SHEET NUMBER |
|---|---|
| DC NP GWMP ARCH TAR 2026 | H04 |

*NOTES*

1. *Install traffic signal poles 4' from the back of curb.*

2. *Install pedestrian pedestals 2.5' from the curb ramp, placed adjacent to the sidewalk.*

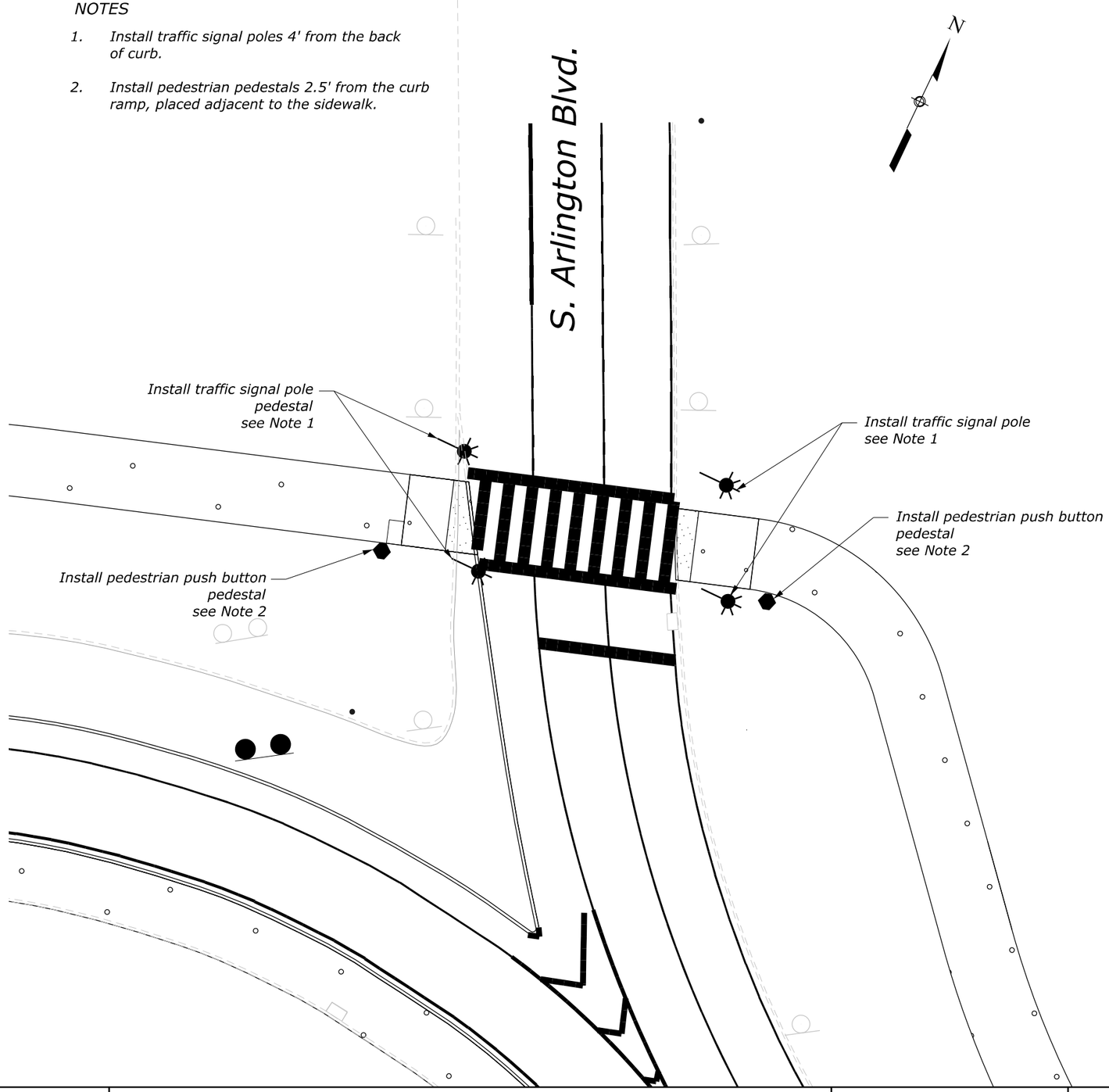


| NO. | DATE | BY | REVISIONS |
|---|---|---|---|
| | | | |
| | | | |
| | | | |
| | | | |

U.S. DEPARTMENT OF TRANSPORTATION
FEDERAL HIGHWAY ADMINISTRATION
OFFICE OF FEDERAL LANDS HIGHWAY

0 10 20
SCALE IN FEET

GEORGE WASHINGTON MEMORIAL PARKWAY

# TRAFFIC SIGNAL PLAN

ARLINGTON BLVD

M:\PROJECTS\gwmp\11(4)\Proj_Dev\CADD\AMC Arch\H01-H04_Memorial Circle.dgn [H04 (Sheet)]
21 May 2026 6:35 PM

## PROJECT DESCRIPTION

*This project consists of asphalt milling and overlay, safety improvements, signaling, pavement markings, and other miscellaneous work.*

## SOILS

*Soil disturbing activities include: sidewalk demolition and construction, concrete island reconstruction and turf establishment.*

*Area of Disturbance:*
*Demolition and construction of sidewalk and ramps: 1.57 acres (68,449 sqft)*
*Construction of islands: 0.22 acres (9,733 sqft)*
*Construction of asphalt pavers: 0.24 acres (10,535 sqft)*

*Total: 2.03 acres (79,380 sqft)*

*The total area of soil disturbance for the project is approximately 2.03 acres. The receiving water is the Potomac River.*

## GENERAL NOTES AND GUIDELINES

*Develop and implement a Spill Prevention Control and Countermeasures (SPCC) Plan following the requirements under 40 CFR 112. Report spills large enough to discharge surface waters to the National Response Center at 1-800-424-8802.*

*The Erosion and Sediment Control Narrative is intended to act as a guideline for preventing erosion and controlling sediment. The work consists of applying measures throughout the life of the project to control erosion and to minimize the sedimentation of rivers, creeks, and streams. Soil erosion control measures are also defined/outlined in the Standard Specifications for Construction of Roads and Bridges on Federal Highway Projects (FP-24) and the Special Contract Requirements. Install all erosion and sediment control devices in accordance with state and county requirements; as well as, Subsection 107.10 and the DOEE 2017 ESC Manual.*

*No construction access will be permitted through a wetland or a waterway.*

*Do not place excavated soil material adjacent to creeks, streams, or bodies of water in a manner that will cause it to be washed away by high water or runoff. Stabilize excess borrow material removed from the construction at the site of placement.*

*Do not allow any construction equipment to operate or access the down-slope side of the perimeter control measures.*

*Direct storm water to vegetated buffer areas and do not discharge directly into surface waters.*

*Preserve existing vegetation, trees, and shrubs when possible, and as directed by the CO. Do not disturb or clear vegetated areas outside the limits of work.*

*Protect all trees meeting the definition for a Special or Heritage trees under the DC Urban Forest Preservation Act, which applies to land maintained by the District of Columbia. Replace impacted trees in accordance with the National Capital Planning Commission Trees Preservation and Replacement Policy.*

## EROSION & SEDIMENT CONTROL CONSTRUCTION SEQUENCE

*Before removal, patching and miliing operation, install erosion and sediment protection devices to ensure disturbed sediment does not leave the project site.*

*Employ temporary stabilization practices in incremental stages when necessary as construction proceeds. Upon completion of any ground disturbing activity, immediately stabilize the associated disturbed areas. Once installed, do not modify the type, size, or location of any control or practice without approval of the CO.*

*Prior to any clearing, grubbing, and excavation, install perimeter controls and temporary inlet protection at the locations specified in the plans or as directed by the CO. Install silt fence around the staging area prior to stockpiling and storing equipment.*

*Once finished grading is achieved and all construction operations in each work area have been completed and all upslope areas are stabilized and vegetation is established, remove all perimeter controls after obtaining approval from the CO.*

*The contractor must conduct operations and maintain the project site so as to minimize the creation and dispersion of dust. Use dust control throughout the work at the site.*

*The contractor must provide clean water, free from salt, oil, and other deleterious material to be used for on-site dust control.*

## EROSION & SEDIMENT CONTROL CONSTRUCTION SEQUENCE (CONTINUED)

*The contractor shall supply water-spraying equipment capable of accessing all work areas.*

*The contractor shall implement strict dust control measures during the active construction periods on-site. These measures shall generally consist of water applications that shall be applied a minimum of once per day during dry weather or more often as required to prevent dust emissions.*

*For water application to undisturbed soil surfaces, the contractor shall:*

*Apply water with equipment consisting of tank, spray bar, and pump with discharge pressure guage.*

*Arrange spray bar height, nozzle spacing and spray pattern to provide complete coverage of ground with water.*

*Disperse water through the nozzles on spray bar at 20 psi (137.8 kPa) minimum. Keep areas damp without creating nuisance conditions such as ponding.*

*For water application to soil surfaces during during demolition and/or excavation, the contractor shall:*

*Apply water with equipment consisting of a tank, pump with discharge gauge, hoses and mist nozzles.*

*Locate tank and spraying equipment so that the entire excavation area can be misted without interfering with the demolition and/or excavation equipment or operations. Keep areas damp without creating nuisance conditions such as ponding.*

*Apply water spray in a manner to prevent movment of spray beyond the site boundaries.*

## MAINTENANCE AND INSPECTION PROCEDURES

*Unless stated otherwise, construct and maintain all vegetated and structural erosion control practices according to Section 157, the details shown in the plans, and the individual permitting requirements. Inspect and maintain erosion control facilities daily during construction activities and immediately following a rain event. Repair and replace any damaged measures by the end of the day.*

*Inlet protection - Inspect weekly to ensure that inlet protection remains firmly in place and is not damaged or clogged. Clean clogged inlet protection or replace clogged or damaged inlet protection as necessary.*

*Fiber roll - Inspect weekly and after each runoff event. Remove sediment deposits from the fiber when it reaches half the height of the device. Replace damaged fiber roll within 24 hours of inspection.*

M:\PROJECTS\gwmp\11(4)\Proj_Dev\CADD\AMC Arch\M01-M03-Memorial Circle_e8s.dgn [M01]
21 May 2026 6:14 PM

| NO. | DATE | BY | REVISIONS |
|---|---|---|---|
| | | | |
| | | | |
| | | | |
| | | | |

U.S. DEPARTMENT OF TRANSPORTATION
FEDERAL HIGHWAY ADMINISTRATION
OFFICE OF FEDERAL LANDS HIGHWAY

GEORGE WASHINGTON MEMORIAL PARKWAY

# EROSION AND SEDIMENT CONTROL NARRATIVE

| Pollution Prevention Good Housekeeping Stamp Notes | |
|---|---|
| **Fuels and Oils** | On-site refueling will be conducted in a dedicated location away from access to surface waters. Install containment berms and, or secondary containments around refueling areas and storage tanks. Spills will be cleaned up immediately and contaminated soils disposed of in accordance with all federal and District of Columbia regulations. Petroleum products will be stored in clearly labeled tightly sealed containers. All vehicles on site will be monitored for leaks and receive regular preventive maintenance activities. Any asphalt substances used on site will be applied according to manufacturer's recommendations. Spill kits will be included with all fueling sources and maintenance activities. |
| **Solid Waste** | No solid materials shall be discharged to surface water. Solid materials including building materials, garbage and paint debris shall be cleaned up daily and deposited into dumpsters, which will be periodically removed and deposited into a landfill. |
| **Abrasive Blasting** | Water blasting, sandblasting, and other forms of abrasive blasting on painted surfaces built prior to 1978 may only be performed if an effective containment system prevents dispersal of paint debris. |
| **Fertilizer** | Fertilizers will be applied only in the minimum amounts recommended by the manufacturer, worked into the soil to limit exposure to stormwater, and stored in a covered shed. Partially used bags will be transferred to a sealable bin to avoid spills. |
| **Paint and Other Chemicals** | All paint containers and curing compounds will be tightly sealed and stored when not required for use. Excess paint will not be discharges to the storm sewers, but will be properly disposed of according to manufacturer's recommendations. Spray guns will be cleaned on a removable tarp. Chemicals used on site are kept in small quantities and in closed containers undercover and kept out of direct contact with stormwater. As with fuels and oils, any inadvertent spills will be cleaned up immediately and disposed of according federal and District of Columbia regulations. |
| **Concrete** | Concrete trucks will not be allowed to wash out or discharge surplus concrete or drum wash on site, except in a specially designated concrete disposal area. Form release oil for decorative stone work will be applied over a pallet covered with an absorbent material to collect excess fluid. The absorbent material will be replaced and disposed of properly when saturated. |
| **Water Testing** | When testing and, or cleaning water supply lines, the discharge from the tested pipe will be collected and conveyed to a completed stormwater conveyance system for ultimate discharge into a stormwater best management practice (BMP). |
| **Sanitary Waste** | Portable lavatories located on site will be services on a regular basis by a contractor. Portable lavatories will be located in an upland area away from direct contact with surface waters. Any spills occurring during servicing will be cleaned immediately and contaminated soils disposed of in accordance with all federal and District of Columbia regulations. |

| DOEE SOIL EROSION AND SEDIMENT CONTROL PLAN GENERAL NOTES |
|---|
| **1.** Following initial land disturbance or re-disturbance, permanent or interim stabilization must be completed within seven (7) calendar days for the surfaces of all perimeter controls, dikes, swales, ditches, perimeter slopes, and slopes greater than three (3) horizontal to one (1) vertical (3:1); and fourteen (14) days for all other disturbed or graded areas on the project site. These requirements do not apply to areas shown on the plan that are used for material storage other than stockpiling, or for those areas on the plan where actual construction activities are being performed. Maintenance shall be performed as necessary so that stabilized areas continuously meet the appropriate requirements of the District of Columbia Standards and Specifications for Soil Erosion and Sediment Control (ESC). [21 DCMR § 542.9 (o)] |
| **2.** ESC measures shall be in place before and during land disturbance. [21 DCMR § 543.6] |
| **3.** Contact DOEE Inspection (202) 535-2977 to schedule a preconstruction meeting at least three (3) business days before the commencement of a land-disturbing activity. [21 DCMR § 503.7 (a)] |
| **4.** A copy of the approved plan set will be maintained at the construction site from the date that construction activities begin to the date of final stabilization and will be available for DOEE inspectors. [21 DCMR § 542.15] |
| **5.** ESC measures shall be in place to stabilize an exposed area as soon as practicable after construction activity has temporarily or permanently ceased but no later than fourteen (14) days following cessation, except that temporary or permanent stabilization shall be in place at the end of each day of underground utility work that is not contained within a larger development site. [21 DCMR § 543.7] |
| **6.** Stockpiled material being actively used during a phase of construction shall be protected against erosion by establishing and maintaining perimeter controls around the stockpile. [21 DCMR § 543.16 (a)] |
| **7.** Stockpiled material not being actively used or added to shall be stabilized with mulch, temporary vegetation, hydro-seed or plastic within fifteen (15) calendar days after its last use or addition. [21 DCMR § 543.16 (b)] |
| **8.** Fill material must be free of contamination levels of any pollutant that is, or may be considered to represent, a possible health hazard to the public or may be detrimental to surface or ground water quality, or which may cause damage to property or the drainage system. All fill material must be free of hazardous materials and comply with all applicable District and federal regulations. |
| **9.** Protect best management practices from sedimentation and other damage during construction for proper post construction operation. [21 DCMR § 543.5] |
| **10.** Request a DOEE inspector's approval after the installation of perimeter erosion and sediment controls, but before proceeding with any other earth disturbance or grading. [21 DCMR § 542.12 (a)] |
| **11.** Request a DOEE inspector's approval after final stabilization of the site and before the removal of erosion and sediment controls. [21 DCMR § 542.12 (b)] |
| **12.** Final stabilization means that all land-disturbing activities at the site have been completed and either of the following two criteria have been met: (1) a uniform (for example, evenly distributed, without large bare areas) perennial vegetative cover with a density of seventy percent (70%) of the native background vegetative cover for the area has been established on all unpaved areas and areas not covered by permanent structures, or (2) equivalent permanent stabilization measures have been employed (such as the use of riprap, gabions, or geotextiles). [21 DCMR § 542.12 (b.1, b.2)] |
| **13.** Follow the requirements of the United States Environmental Protection Agency approved Stormwater Pollution Prevention Plan (SWPPP) and maintain a legible copy of this SWPPP on site. [21 DCMR § 543.10 (b)] |
| **14.** Post a sign that notifies the public to contact DOEE in the event of erosion or other pollution. The sign will be placed at each entrance to the site or as directed by the DOEE inspector. Each sign will be no less than 18 x 24 inches in size and made of materials that will withstand weather for the duration of the project. Lettering will be at least 1 inch in height and easily readable by the public from a distance of twelve feet (12 ft). The sign must direct the public, in substantially the following form: "To Report Erosion, Runoff, or Stormwater Pollution" and will provide the construction site address, DOEE's telephone number (202-535-2977), DOEE's e-mail address (IEB.scheduling@dc.gov), and the 311 mobile app heading ("Construction-Erosion Runoff"). [21 DCMR § 543.22] |
| If a site disturbs 5,000 square feet of land or greater, the ESC plan must contain the following statement: |
| **15.** A *Responsible Person* must be present or available while the site is in a land-disturbing phase. The *Responsible Person* is charged with being available to (a) inspect the site and its ESC measures at least once biweekly and after a rainfall event to identify and remedy each potential or actual erosion problem, (b) respond to each potential or actual erosion problem identified by construction personnel, and (c) speak on site with DOEE to remedy each potential or actual erosion problem. A *Responsible Person* shall be (a) licensed in the District of Columbia as a civil or geotechnical engineer, a land surveyor, or architect; or (b) certified through a training program that DOEE approves, including a course on erosion control provided by another jurisdiction or professional association. During construction, the *Responsible Person* shall keep on site proof of professional licensing or of successful completion of a DOEE-approved training program. [21 DCMR § 547] |

M:\PROJECTS\gwmp\11(4)\Proj_Dev\CADD\AMC Arch\M01-M03-Memorial Circle_e&s.dgn [M02]
21 May 2026 6:14 PM

| NO. | DATE | BY | REVISIONS |
|---|---|---|---|
| | | | |
| | | | |
| | | | |
| | | | |

U.S. DEPARTMENT OF TRANSPORTATION
FEDERAL HIGHWAY ADMINISTRATION
OFFICE OF FEDERAL LANDS HIGHWAY

GEORGE WASHINGTON MEMORIAL PARKWAY

# EROSION AND SEDIMENT CONTROL NARRATIVE

## *VEGETATIVE STABILIZATION*

*There will be X.X acres in need of stabilization as a result of this project. Areas of turf establishment will be prepared with fertilizer, topsoil and mulch.*

*In accordance with Subsection 625.06, apply limestone and fertilizer at the following rates for the roadside turf area mix only:*

**Permanent Seeding Summary**

| | Seed Mixture | | | | Fertilizer Rate (10-20-20) | | | Lime Rate |
|---|---|---|---|---|---|---|---|---|
| No. | Species | Application Rate (lb/ac) | Seeding Dates | Seeding Depths | N | $P_2O_5$ | $K_2O$ | |
| 1 | Barlexas Tall Fescue | 75.0 | February 15 to Novemeber 15 | | 45 lb/ac | 90 lb/ac | 90 lb/ac | 2 ton/ac |
| 2 | Redcoat Tall Fescue | 62.5 | February 15 to Novemeber 15 | | | | | |
| 3 | Chewing Fescue | 62.5 | February 15 to Novemeber 15 | | | | | |
| 4 | Impact Kentucky Bluegrass | 25.0 | February 15 to Novemeber 15 | | (1.0 lb/ 1,000 $ft^2$) | (2.0 lb/ 1,000 $ft^2$) | (2.0 lb/ 1,000 $ft^2$) | (90 lb/ 1,000 $ft^2$) |
| 5 | Catalina Perennial Ryegrass | 25.0 | February 15 to Novemeber 15 | | | | | |

**Permanent Seeding Summary**

| | Seed Mixture | | | | Fertilizer Rate (10-20-20) | | | Lime Rate |
|---|---|---|---|---|---|---|---|---|
| No. | Species | Application Rate (lb/ac) | Seeding Dates | Seeding Depths | N | $P_2O_5$ | $K_2O$ | |
| 1 | Barlexas Tall Fescue | 75.0 | November 16 to February 14 | | 45 lb/ac | 90 lb/ac | 90 lb/ac | 2 ton/ac |
| 2 | Redcoat Tall Fescue | 62.5 | November 16 to February 14 | | | | | |
| 3 | Chewing Fescue | 62.5 | November 16 to February 14 | | | | | |
| 4 | Impact Kentucky Bluegrass | 25.0 | November 16 to February 14 | | (1.0 lb/ 1,000 $ft^2$) | (2.0 lb/ 1,000 $ft^2$) | (2.0 lb/ 1,000 $ft^2$) | (90 lb/ 1,000 $ft^2$) |
| 5 | Catalina Perennial Ryegrass | 25.0 | November 16 to February 14 | | | | | |

**Temporary Seeding Summary**

| | Seed Mixture | | | | Fertilizer Rate (10-20-20) | Lime Rate |
|---|---|---|---|---|---|---|
| No. | Species | Application Rate (lb/ac) | Seeding Dates | Seeding Depths | | |
| 1 | Barlexas Tall Fescue | 75.0 | February 15 to Novemeber 15 | | 436 lb/ac | 2 ton/ac |
| 2 | Redcoat Tall Fescue | 62.5 | February 15 to Novemeber 15 | | | |
| 3 | Chewing Fescue | 62.5 | February 15 to Novemeber 15 | | | |
| 4 | Impact Kentucky Bluegrass | 25.0 | February 15 to Novemeber 15 | | (10 lb/ 1,000 $ft^2$) | (90 lb/ 1,000 $ft^2$) |
| 5 | Catalina Perennial Ryegrass | 25.0 | February 15 to Novemeber 15 | | | |

**Temporary Seeding Summary**

| | Seed Mixture | | | | Fertilizer Rate (10-20-20) | Lime Rate |
|---|---|---|---|---|---|---|
| No. | Species | Application Rate (lb/ac) | Seeding Dates | Seeding Depths | | |
| 1 | Barlexas Tall Fescue | 75.0 | November 16 to February 14 | | 436 lb/ac | 2 ton/ac |
| 2 | Redcoat Tall Fescue | 62.5 | November 16 to February 14 | | | |
| 3 | Chewing Fescue | 62.5 | November 16 to February 14 | | | |
| 4 | Impact Kentucky Bluegrass | 25.0 | November 16 to February 14 | | (10 lb/ 1,000 $ft^2$) | (90 lb/ 1,000 $ft^2$) |
| 5 | Catalina Perennial Ryegrass | 25.0 | November 16 to February 14 | | | |

M:\PROJECTS\gwmp\11(4)\Proj_Dev\CADD\AMC Arch\M01-M03-Memorial Circle_e8s.dgn [M03]
21 May 2026 6:14 PM

| NO. | DATE | BY | REVISIONS |
|---|---|---|---|
| | | | |
| | | | |
| | | | |
| | | | |

U.S. DEPARTMENT OF TRANSPORTATION
FEDERAL HIGHWAY ADMINISTRATION
OFFICE OF FEDERAL LANDS HIGHWAY

GEORGE WASHINGTON MEMORIAL PARKWAY

# EROSION AND SEDIMENT CONTROL NARRATIVE

NPS PMIS No. XXXXXX NPS Drwg No. XXX/XXXX

| PROJECT | SHEET NUMBER |
|---|---|
| DC NP GWMP ARCH TAR 2026 | M04 |

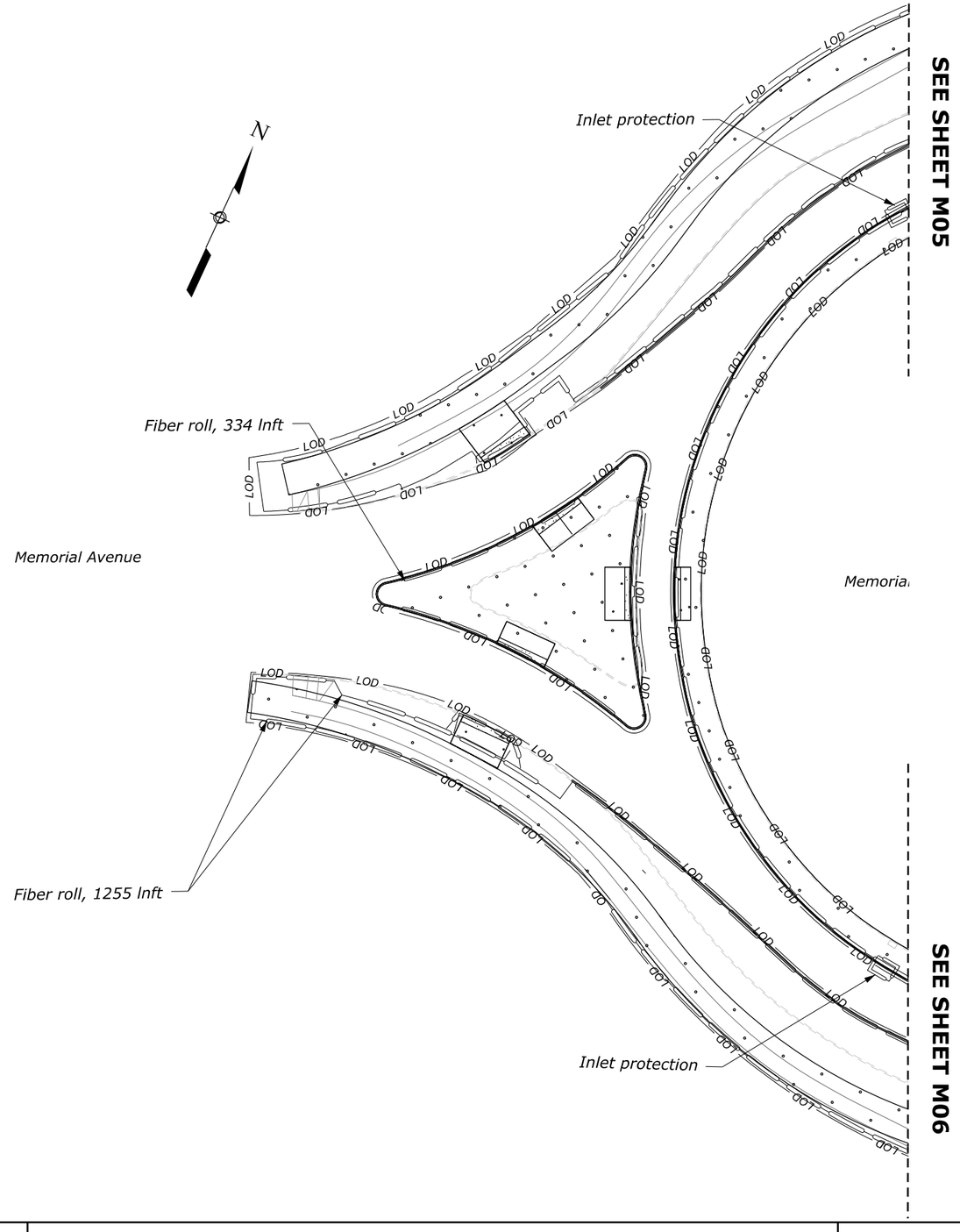


| NO. | DATE | BY | REVISIONS |
|---|---|---|---|
| | | | |
| | | | |
| | | | |
| | | | |

U.S. DEPARTMENT OF TRANSPORTATION
FEDERAL HIGHWAY ADMINISTRATION
OFFICE OF FEDERAL LANDS HIGHWAY

0 25 50
SCALE IN FEET

GEORGE WASHINGTON MEMORIAL PARKWAY

# EROSION AND SEDIMENT CONTROL PLAN

MEMORIAL CIRCLE

M:\PROJECTS\gwmp\11(4)\Proj_Dev\CADD\AMC Arch\M04-M06_Memorial Circle.dgn [M004 (SHEET)]
21 May 2026 6:20 PM

NPS PMIS No. XXXXXX NPS Drwg No. XXX/XXXX

| PROJECT | SHEET NUMBER |
|---|---|
| DC NP GWMP ARCH TAR 2026 | M05 |

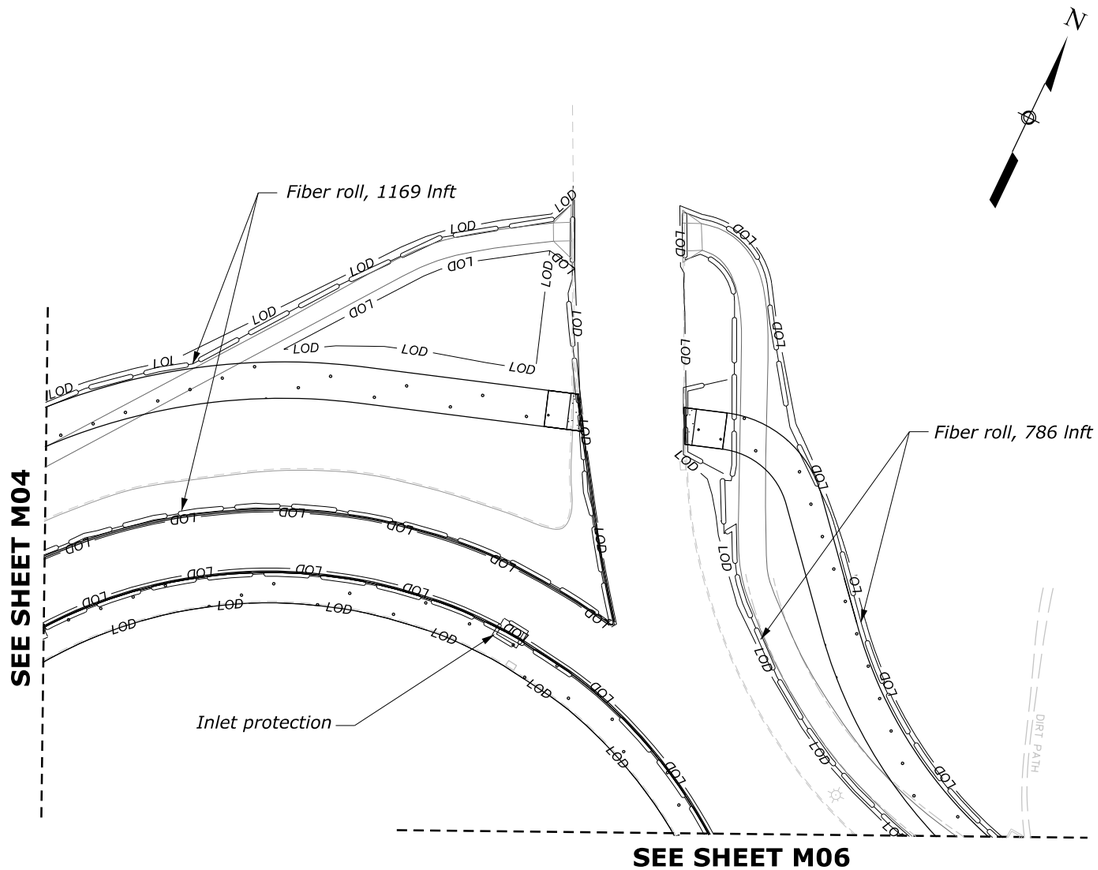


| NO. | DATE | BY | REVISIONS |
|---|---|---|---|
| | | | |
| | | | |
| | | | |
| | | | |

U.S. DEPARTMENT OF TRANSPORTATION
FEDERAL HIGHWAY ADMINISTRATION
OFFICE OF FEDERAL LANDS HIGHWAY

0 25 50
SCALE IN FEET

GEORGE WASHINGTON MEMORIAL PARKWAY

# EROSION AND SEDIMENT CONTROL PLAN

MEMORIAL CIRCLE
S. ARLINGTON BLVD

M:\PROJECTS\gwmp\11(4)\Proj_Dev\CADD\AMC Arch\M04-M06_Memorial Circle.dgn [M05 SHEET]
21 May 2026 6:20 PM

NPS PMIS No. XXXXXX NPS Drwg No. XXX/XXXX

| PROJECT | SHEET NUMBER |
|---|---|
| DC NP GWMP ARCH TAR 2026 | M06 |

**SEE SHEET M05**

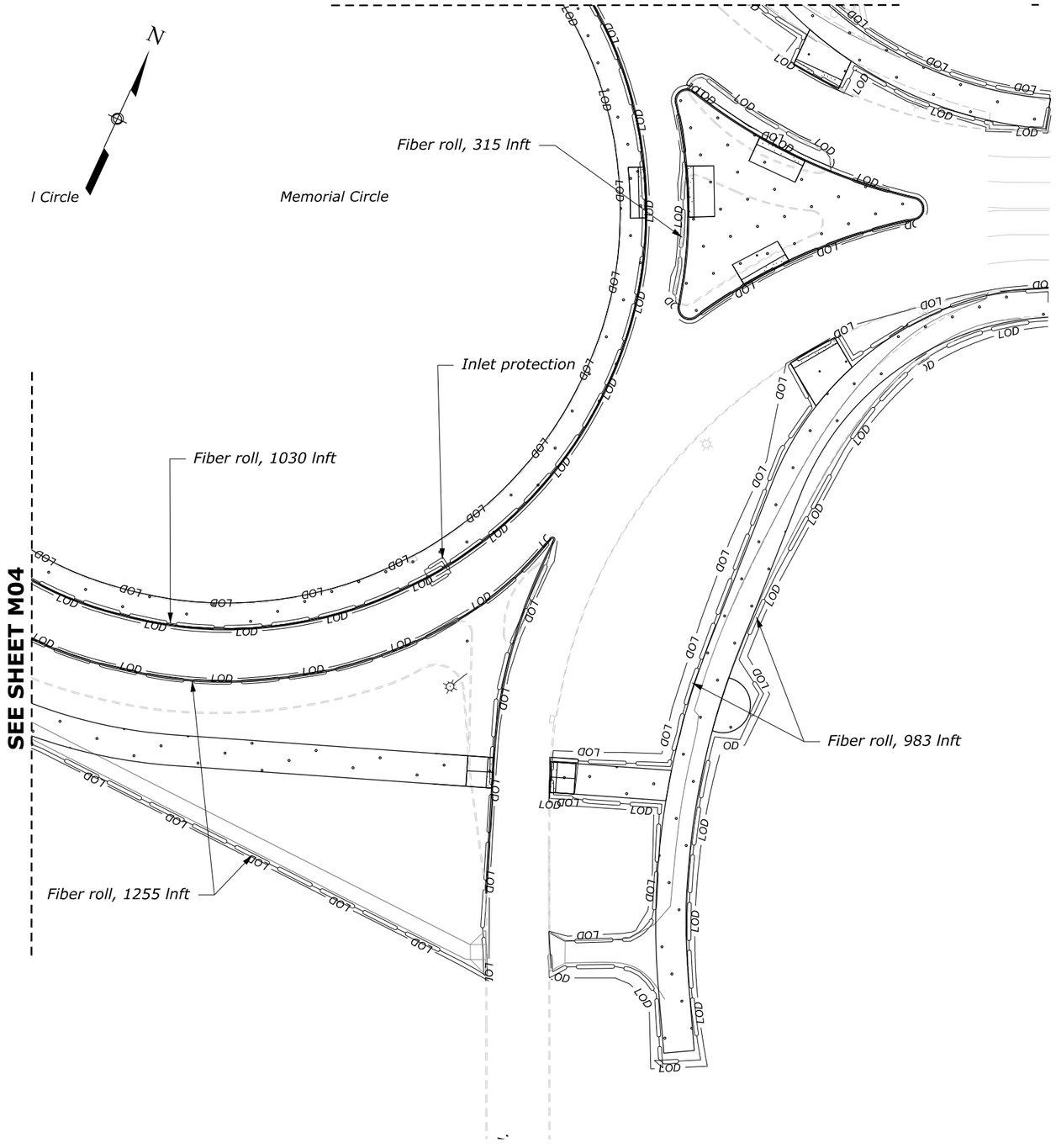


**SEE SHEET M04**

M:\PROJECTS\gwmp\11(4)\Proj_Dev\CADD\AMC Arch\M04-M06_Memorial Circle.dgn [M06 (SHEET)]

21 May 2026 6:20 PM

| NO. | DATE | BY | REVISIONS |
|---|---|---|---|
| | | | |
| | | | |
| | | | |
| | | | |

U.S. DEPARTMENT OF TRANSPORTATION
FEDERAL HIGHWAY ADMINISTRATION
OFFICE OF FEDERAL LANDS HIGHWAY

0 25 50
SCALE IN FEET

GEORGE WASHINGTON MEMORIAL PARKWAY

# EROSION AND SEDIMENT CONTROL PLAN

MEMORIAL CIRCLE
WASHINGTON BLVD

## *TRAFFIC CONTROL PLAN GENERAL NOTES:*

1. *The Traffic Control Plans have been designed in accordance with the Manual on Uniform Traffic Control Devices (MUTCD), latest edition, and Section 635 of the Eastern Federal Lands Highway Division (EFLHD) detail drawings.*

2. *Traffic control signing, devices, workzone and overall set up is located within National Park Service (NPS)-owned and maintained roadways. If applicable, coordinate with DDOT, VDOT, Arlington County or other local agencies for work taking place along roadways under their respective jurisdiction. If applicable, all lane closure hours on VDOT-maintained roadways shall be in accordance with the Lane Closures in NOVA District Memorandum, dated February, 2024. If applicable, all work along DDOT-maintained roadways shall be in accordance with the DDOT Design and Engineering Manual (2023) and the DDOT Work Zone Temporary Traffic Control Manual (2006).*

3. *The allowable lane closure hours apply to the Memorial Circle Safety Improvements.*

   (a) *Maintain a minimum of one lane of traffic in each direction from 9:00 PM to 5:00 AM and during non-rush hours.*
   (b) *During rush hours, maintain existing number of lanes of traffic.*
   (c) *Lane closures must be scheduled to not conflict with local events.*
   (d) *Definition of Rush Hours and Night Hours*
   *EB Morning Rush Hours: 5:00 AM to 9:30 AM*
   *WB Evening Rush Hours: 2:30 PM to 7:00 PM*
   *Night Hours: 9:00 PM to 5:00 AM*

4. *Take all appropriate measures to ensure that adequate sight distances are provided during construction operations. Traffic control devices, signs, construction equipment, material storage or any other obstacle should not interfere with sight distances.*

5. *Do not store equipment and/or materials within the established clear zone unless positive protection is provided.*

6. *Do not perform any work, park vehicles or equipment, or store materials in buffer areas of lane closures.*

7. *Place signs as shown in the Traffic Control Plans. Temporary sign locations can be adjusted in the field so that they do not conflict with permanent existing signs or other existing features, such as sidewalk ramps, railing or light poles. Maintain all existing permanent signs during construction, unless otherwise noted in each stage of the Traffic Control Plans.*

8. *The Temporary Traffic Control Plans depict the major traffic control devices and safety measures required for construction. The daily control of traffic including placement, maintenance, and removal of traffic control devices is the Contractor's responsibility.*

9. *Implement additional measures as needed to provide separation between pedestrians, bicycles, and the work zone.*

10. *Remove traffic control devices no longer needed at the end of each shift. Cover signs that conflict with the current traffic set-up.*

11. *Coordinate traffic control signing and devices as needed with all other work zones in the vicinity, and make adjustments as necessary.*

## *TRANSPORTATION OPERATIONS PLAN:*

*The following is a list of local emergency contact agencies:*

| | |
|---|---|
| *Fire and Emergency Medical Services:* | *911* |
| *US Park Police:* | *202-619-7500* |
| *Virginia State Police:* | *703-803-0026* |
| *Arlington County Police:* | *703-558-2222* |
| *Arlington County Public Safety Communications and Emergency Management:* | *703-228-7935* |
| *Arlington County Transportation:* | *703-228-5000* |
| *Metropolitan Area Transportation Operations Coordination (MATOC):* | *301-405-7841* |
| *DDOT Transportation Management Center:* | *202-673-6813* |
| *VDOT Northern Region Operations Center:* | *703-877-3401* |
| *MDOT Operations Center:* | *410-582-5605* |
| *US Department of Homeland Security:* | *202-282-8000* |

*For utility company contact information, call 811.*

## *POSTED SPEED LIMITS TABLE*

| *Road Name* | *Posted Speed Limit (mph)* |
|---|---|
| *Arlington Memorial Bridge* | *30* |
| *Memorial Avenue* | *20-30* |
| *Washington Boulevard* | *25-40* |
| *George Washington Memorial Parkway* | *50* |
| *GWMP Distributor Ramp at Memorial Circle* | *30* |
| *Washington Blvd to Memorial Circle* | *30-45* |
| *Washington Blvd from Memorial Circle to US Hwy 50* | *30-40* |
| *Washington Blvd Turnaround* | *30* |

M:\PROJECTS\gwmp\11(4)\Proj_Dev\CADD\AMC Arch\N Sheets\N01-NYX-Memorial Circle_ttc_nar.dgn [TEMPORARY TRAFFIC CONTROL NARRATIVE]
21 May 2026 6:17 PM

| NO. | DATE | BY | REVISIONS |
|---|---|---|---|
| | | | |
| | | | |
| | | | |
| | | | |

U.S. DEPARTMENT OF TRANSPORTATION
FEDERAL HIGHWAY ADMINISTRATION
OFFICE OF FEDERAL LANDS HIGHWAY

GEORGE WASHINGTON MEMORIAL PARKWAY

# TEMPORARY TRAFFIC CONTROL NARRATIVE

NPS PMIS No. XXXXXX NPS Drwg No. XXX/XXXX

| PROJECT | SHEET NUMBER |
|---|---|
| DC NP GWMP ARCH TAR 2026 | N02 |

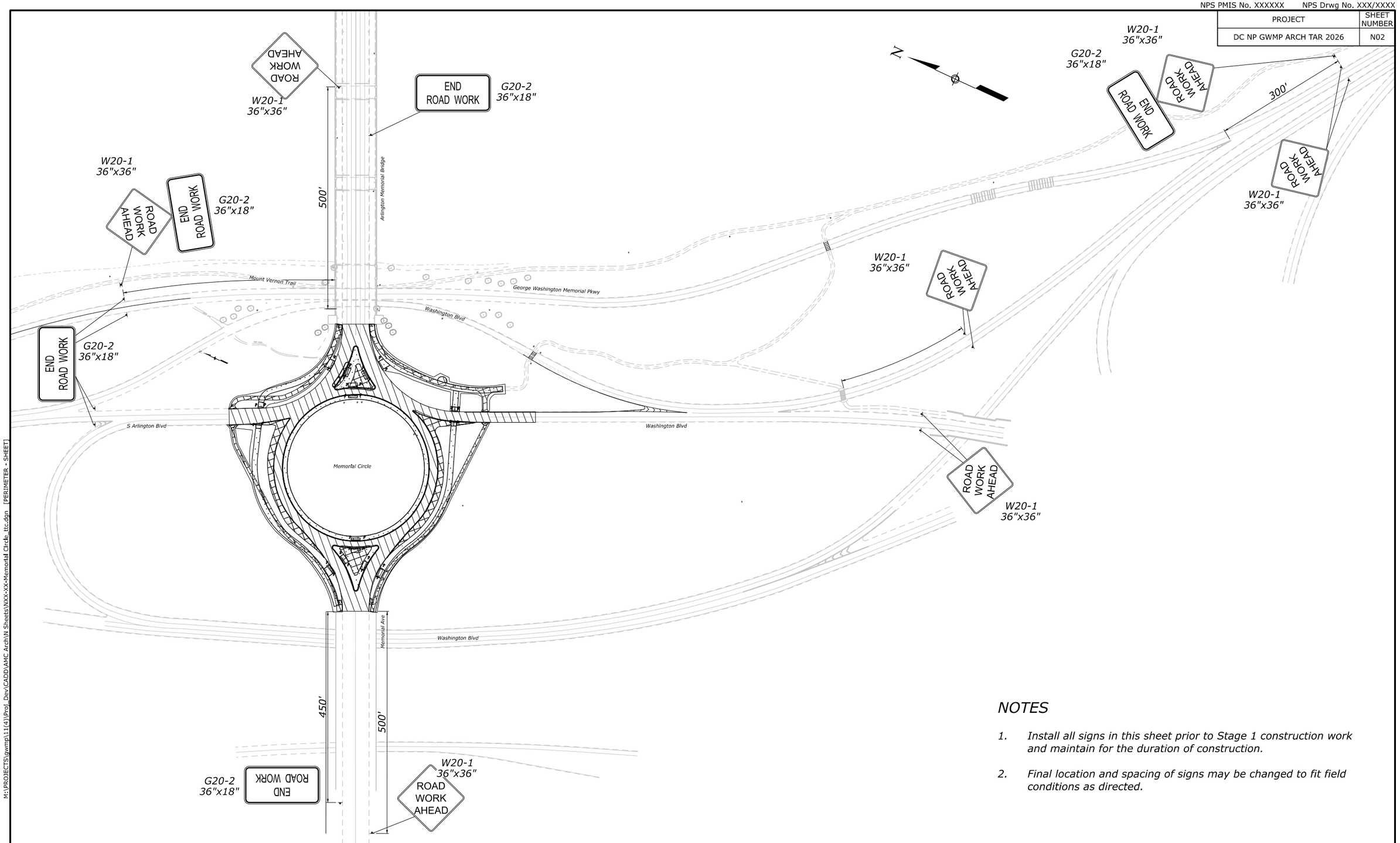


## NOTES

1. *Install all signs in this sheet prior to Stage 1 construction work and maintain for the duration of construction.*
2. *Final location and spacing of signs may be changed to fit field conditions as directed.*

| NO. | DATE | BY | REVISIONS |
|---|---|---|---|
| | | | |
| | | | |
| | | | |
| | | | |

U.S. DEPARTMENT OF TRANSPORTATION
FEDERAL HIGHWAY ADMINISTRATION
OFFICE OF FEDERAL LANDS HIGHWAY

0 100 200
SCALE IN FEET

GEORGE WASHINGTON MEMORIAL PARKWAY

# TEMPORARY TRAFFIC CONTROL PLAN FOR THE SIGNAL AND SIDEWALK IMPROVEMENT

PERIMETER PLAN

M:\PROJECTS\gwmp\11(4)\Proj_Dev\CADD\AMC Arch\N Sheets\WXX-XX-Memorial Circle_ttc.dgn [PERIMETER - SHEET]
21 May 2026 6:19 PM

NPS PMIS No. XXXXXX NPS Drwg No. XXX/XXXX

| PROJECT | SHEET NUMBER |
|---|---|
| DC NP GWMP ARCH TAR 2026 | N03 |

**SEE SHEET N05**

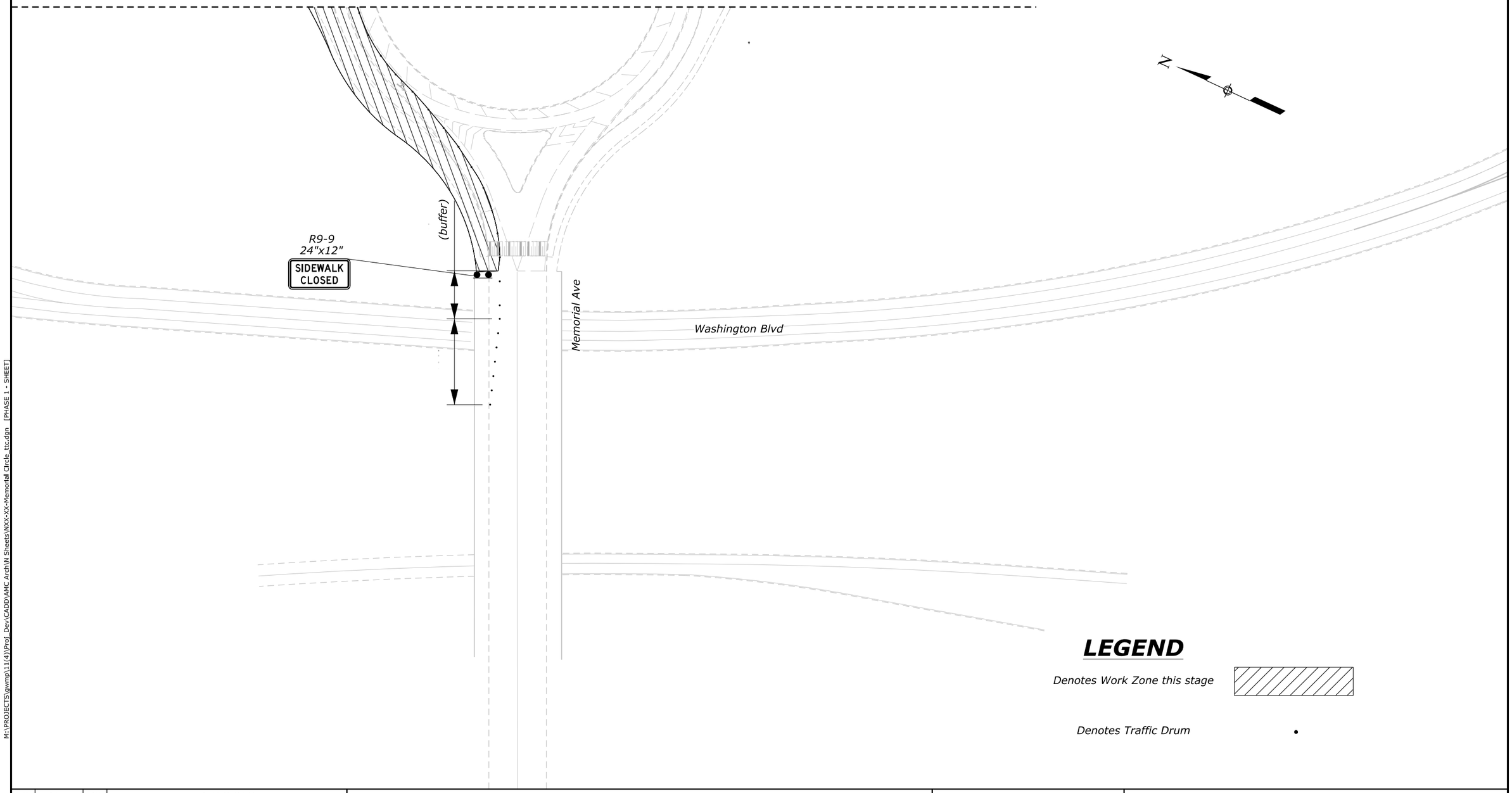


## LEGEND

*Denotes Work Zone this stage*

*Denotes Traffic Drum*

| NO. | DATE | BY | REVISIONS |
|---|---|---|---|
| | | | |
| | | | |
| | | | |
| | | | |

U.S. DEPARTMENT OF TRANSPORTATION
FEDERAL HIGHWAY ADMINISTRATION
OFFICE OF FEDERAL LANDS HIGHWAY

0 50 100
SCALE IN FEET

GEORGE WASHINGTON MEMORIAL PARKWAY

# TEMPORARY TRAFFIC CONTROL PLAN FOR THE SIGNAL AND SIDEWALK IMPROVEMENT

STAGE 1

M:\PROJECTS\gwmp\11(4)\Proj_Dev\CADD\AMC Arch\N Sheets\NXX-XX-Memorial Circle_ttc.dgn [PHASE 1 - SHEET]
21 May 2026 6:19 PM

NPS PMIS No. XXXXXX NPS Drwg No. XXX/XXXX

| PROJECT | SHEET NUMBER |
|---|---|
| DC NP GWMP ARCH TAR 2026 | N04 |

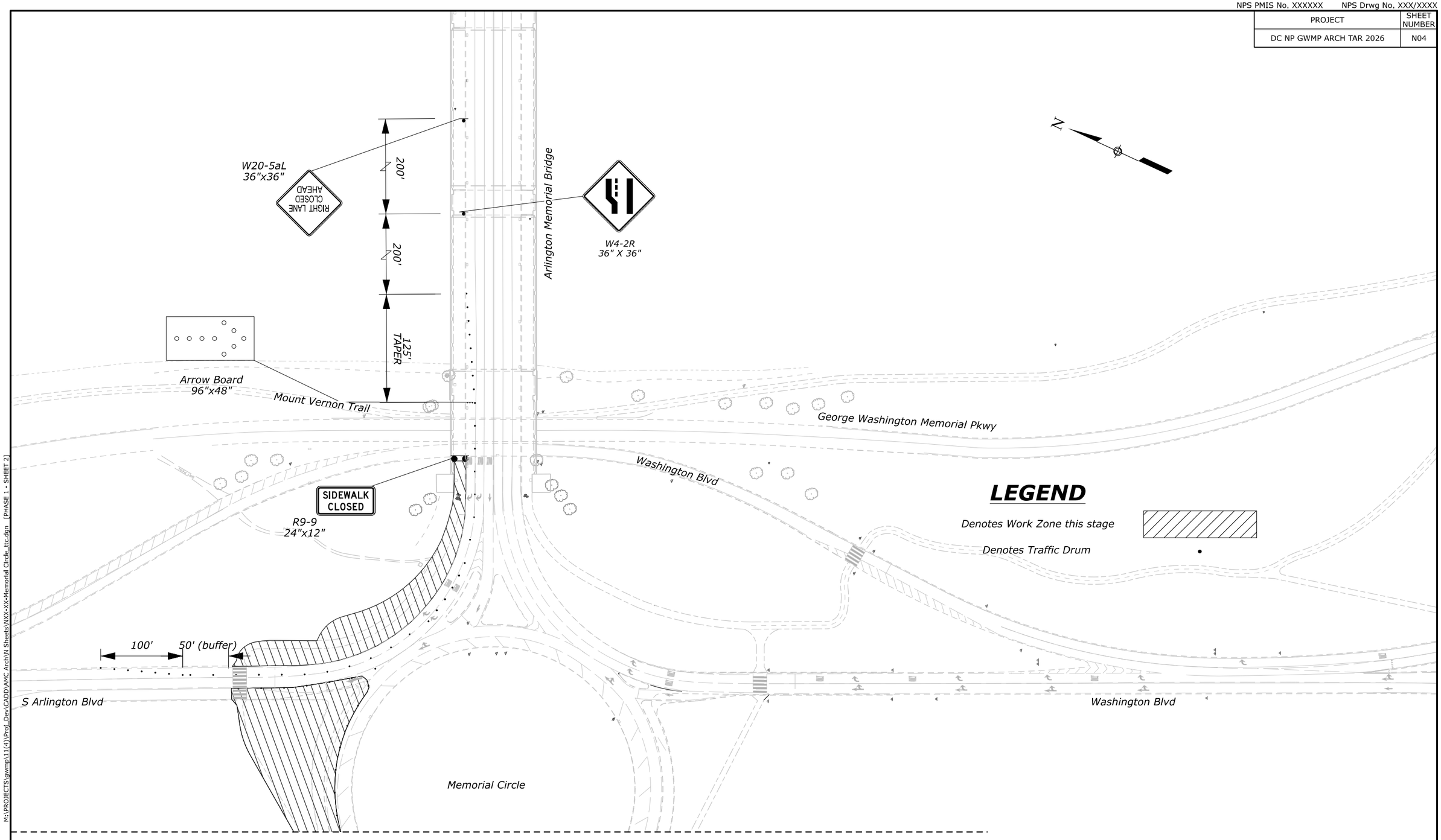


**SEE SHEET N04**

| NO. | DATE | BY | REVISIONS |
|---|---|---|---|
| | | | |
| | | | |
| | | | |
| | | | |

U.S. DEPARTMENT OF TRANSPORTATION
FEDERAL HIGHWAY ADMINISTRATION
OFFICE OF FEDERAL LANDS HIGHWAY

0 50 100
SCALE IN FEET

GEORGE WASHINGTON MEMORIAL PARKWAY

# TEMPORARY TRAFFIC CONTROL PLAN FOR THE SIGNAL AND SIDEWALK IMPROVEMENT

STAGE 1

M:\PROJECTS\gwmp\11(4)\Proj_Dev\CADD\AMC Arch\N Sheets\NXX-XX-Memorial Circle_ttc.dgn [PHASE 1 - SHEET 2]
21 May 2026 6:19 PM

NPS PMIS No. XXXXXX NPS Drwg No. XXX/XXXX

| PROJECT | SHEET NUMBER |
|---|---|
| DC NP GWMP ARCH TAR 2026 | N05 |

**SEE SHEET N07**

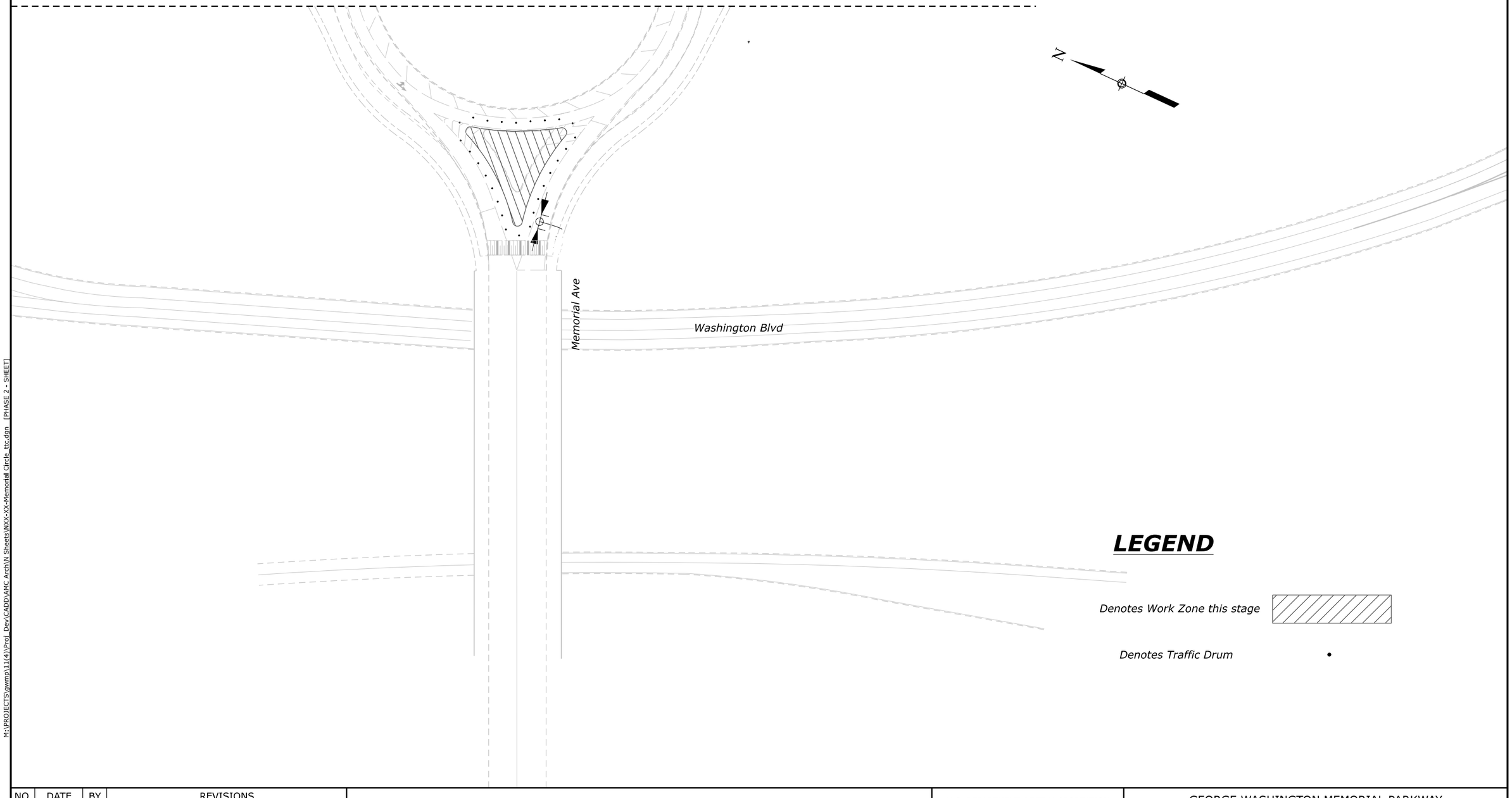


## *LEGEND*

*Denotes Work Zone this stage*

*Denotes Traffic Drum*

| NO. | DATE | BY | REVISIONS |
|---|---|---|---|
| | | | |
| | | | |
| | | | |
| | | | |

U.S. DEPARTMENT OF TRANSPORTATION
FEDERAL HIGHWAY ADMINISTRATION
OFFICE OF FEDERAL LANDS HIGHWAY

0 50 100
SCALE IN FEET

GEORGE WASHINGTON MEMORIAL PARKWAY

# TEMPORARY TRAFFIC CONTROL PLAN FOR THE SIGNAL AND SIDEWALK IMPROVEMENT

STAGE 2

M:\PROJECTS\gwmp\111(4)\Proj_Dex\CADD\AMC Arch\N Sheets\NXX-XX-Memorial Circle_ttc.dgn [PHASE 2 - SHEET]
21 May 2026 6:19 PM

NPS PMIS No. XXXXXX NPS Drwg No. XXX/XXXX

| PROJECT | SHEET NUMBER |
|---|---|
| DC NP GWMP ARCH TAR 2026 | N06 |

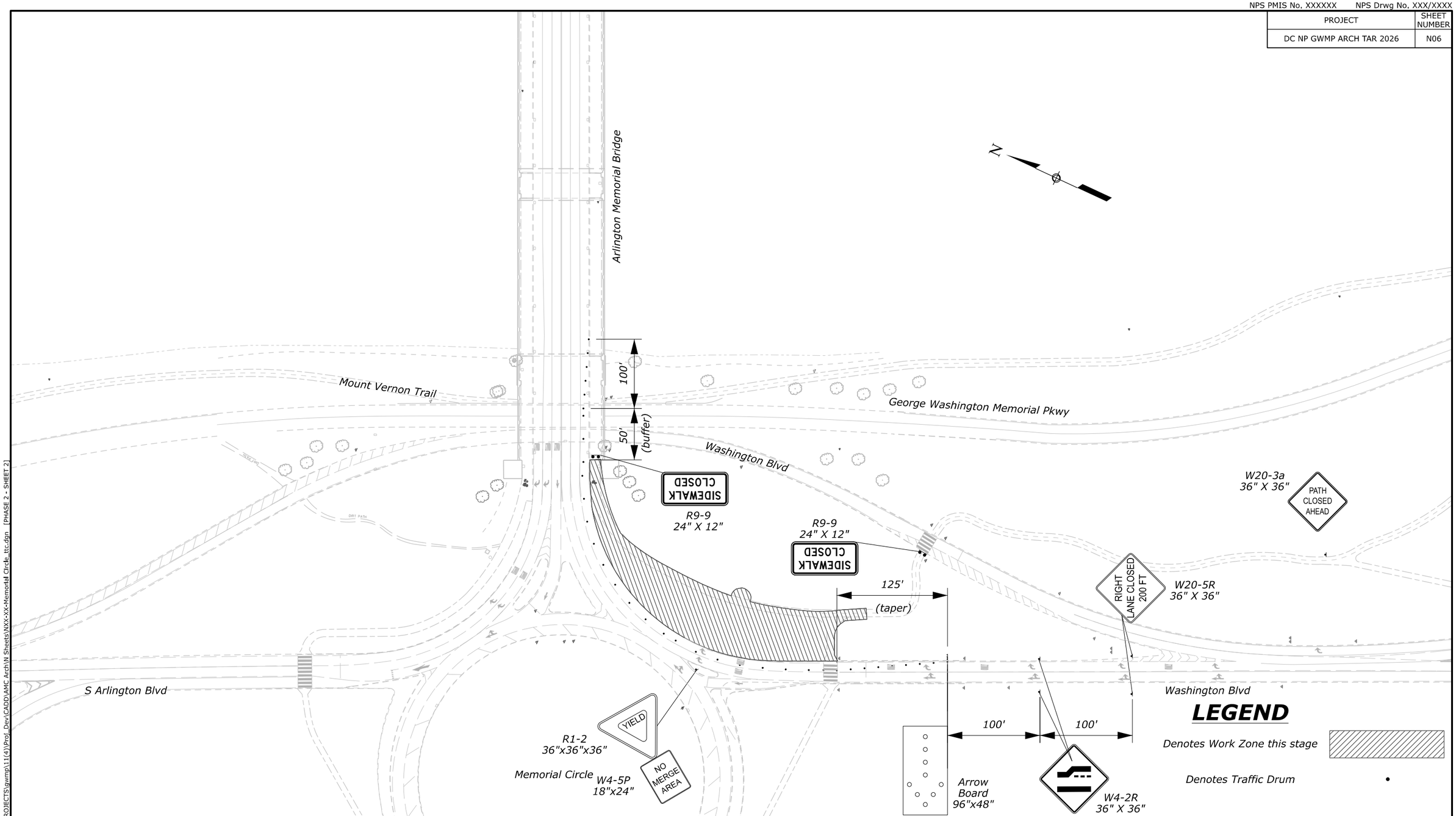


SEE SHEET N06

| NO. | DATE | BY | REVISIONS |
|---|---|---|---|
| | | | |
| | | | |
| | | | |
| | | | |

U.S. DEPARTMENT OF TRANSPORTATION
FEDERAL HIGHWAY ADMINISTRATION
OFFICE OF FEDERAL LANDS HIGHWAY

0 50 100
SCALE IN FEET

GEORGE WASHINGTON MEMORIAL PARKWAY

# TEMPORARY TRAFFIC CONTROL PLAN FOR THE SIGNAL AND SIDEWALK IMPROVEMENT

STAGE 2

M:\PROJECTS\gwmp\11(4)\Proj_Dev\CADD\AMC Arch\N Sheets\NXX-XX-Memorial Circle_ttc.dgn [PHASE 2 - SHEET 2]
21 May 2026 6:19 PM

NPS PMIS No. XXXXXX NPS Drwg No. XXX/XXXX

| PROJECT | SHEET NUMBER |
|---|---|
| DC NP GWMP ARCH TAR 2026 | N07 |

**SEE SHEET N09**

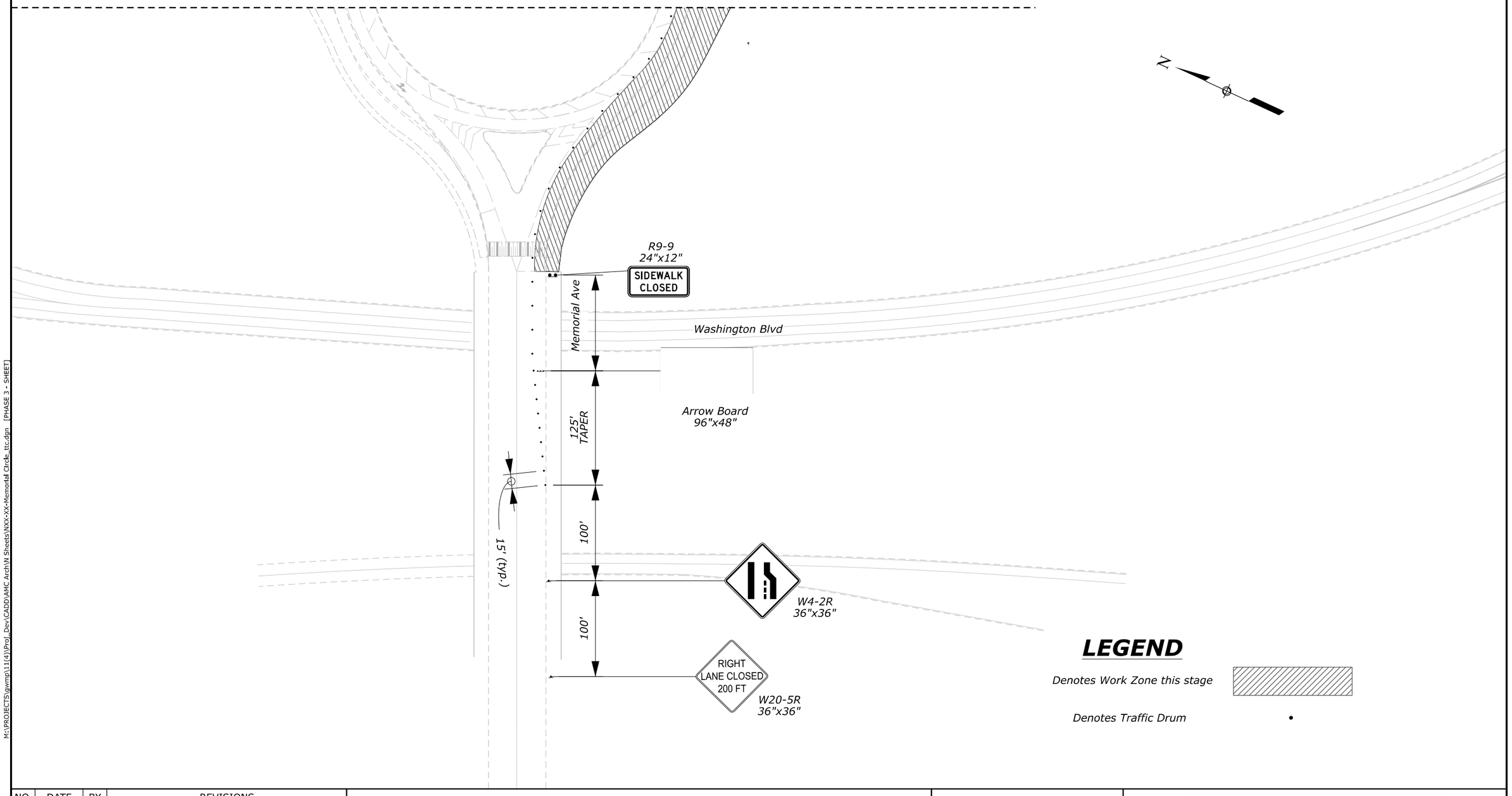


## LEGEND

Denotes Work Zone this stage

Denotes Traffic Drum •

| NO. | DATE | BY | REVISIONS |
|---|---|---|---|
| | | | |
| | | | |
| | | | |
| | | | |

U.S. DEPARTMENT OF TRANSPORTATION
FEDERAL HIGHWAY ADMINISTRATION
OFFICE OF FEDERAL LANDS HIGHWAY

0 50 100
SCALE IN FEET

GEORGE WASHINGTON MEMORIAL PARKWAY

# TEMPORARY TRAFFIC CONTROL PLAN FOR THE SIGNAL AND SIDEWALK IMPROVEMENT

STAGE 3

M:\PROJECTS\gwmp\11(4)\Proj_Dev\CADD\AMC Arch\N Sheets\WXX-XX-Memorial Circle_ntc.dgn [PHASE 3 - SHEET]
21 May 2026 6:19 PM

NPS PMIS No. XXXXXX NPS Drwg No. XXX/XXXX

| PROJECT | SHEET NUMBER |
|---|---|
| DC NP GWMP ARCH TAR 2026 | N08 |

W20-5aL
36"x36"

2 LEFT LANES CLOSED AHEAD

100'

100'

125'
TAPER

Arrow Board
96"x48"

Arlington Memorial Bridge

W4-2L
36" X 36"

N

Mount Vernon Trail

George Washington Memorial Pkwy

Washington Blvd

## LEGEND

Denotes Work Zone this stage

Denotes Traffic Drum

R9-9
24"x12"

SIDEWALK CLOSED

125'
TAPER

S Arlington Blvd

Arrow Board
96"x48"

Washington Blvd

200'

W4-2L
36"x36"

LEFT LANE CLOSED AHEAD

W20-5L
36"x36"

Memorial Circle

**SEE SHEET N08**

| NO. | DATE | BY | REVISIONS |
|---|---|---|---|
| | | | |
| | | | |
| | | | |
| | | | |

U.S. DEPARTMENT OF TRANSPORTATION
FEDERAL HIGHWAY ADMINISTRATION
OFFICE OF FEDERAL LANDS HIGHWAY

0 50 100
SCALE IN FEET

GEORGE WASHINGTON MEMORIAL PARKWAY

# TEMPORARY TRAFFIC CONTROL PLAN FOR THE SIGNAL AND SIDEWALK IMPROVEMENT

STAGE 3

M:\PROJECTS\gwmp\11(4)\Proj_Dev\CADD\AMC Arch\N Sheets\NXX-XX-Memorial Circle_ttc.dgn [PHASE 3 - SHEET 2]

21 May 2026 6:19 PM

NPS PMIS No. XXXXXX NPS Drwg No. XXX/XXXX

| PROJECT | SHEET NUMBER |
|---|---|
| DC NP GWMP ARCH TAR 2026 | N09 |

N

*Memorial Circle*

15' (typ.)

## *LEGEND*

*Denotes Work Zone this stage*

*Denotes Traffic Drum*

| NO. | DATE | BY | REVISIONS |
|---|---|---|---|
| | | | |
| | | | |
| | | | |
| | | | |

U.S. DEPARTMENT OF TRANSPORTATION
FEDERAL HIGHWAY ADMINISTRATION
OFFICE OF FEDERAL LANDS HIGHWAY

0 25 50
SCALE IN FEET

GEORGE WASHINGTON MEMORIAL PARKWAY

# TEMPORARY TRAFFIC CONTROL PLAN FOR THE SIGNAL AND SIDEWALK IMPROVEMENT

STAGE 4

M:\PROJECTS\gwmp\11(4)\Proj_Dev\CADD\AMC Arch\N Sheets\NXX-XX-Memorial Circle_ ttc.dgn [PHASE 4 - SHEET]

21 May 2026 6:19 PM

NPS PMIS No. XXXXXX NPS Drwg No. XXX/XXXX

| PROJECT | SHEET NUMBER |
|---|---|
| DC NP GWMP ARCH TAR 2026 | N10 |

W20-5L
36"x36"

W4-2L
36"x36"

200'

200'

125'
TAPER

Mount Vernon Trail

GEORGE WASHINGTON MEMORIAL PKWY

WASHINGTON BLVD

DIRT PATH

DIRT PATH

Arlington

George Washington Memorial Pkwy

Washington Blvd

W4-3
36"x36"

N

END
DETOUR

M4-8a
24"x18"

Place temporary crosswalk

S Arlington Blvd

Rapid
Flashing
Beacon

W11-15
36"x36"

W16-7PL
21"x16"

M4-9aL
30"x24"

DETOUR

M4-9aR
30"x24"

DETOUR

Construct temporary
aggregate path

W6-3
36"x36"

STATE
LAW
STOP
FOR
IN
CROSSWALK

R1-6e
12"x36"
(double-
sided)

Rapid
Flashing
Beacon

Memorial Circle

W11-15
36"x36"

W16-7PR
21"x16"

Place temporary pavement markings,
white, 293 lnft

Place temporary pavement markings,
yellow, 2756 lnft

ROAD
CLOSED

R11-2
48"x30"

W1-6R
48"x24"

mounted on Type 3 barricade

R9-9
24"x12"

M4-9aR
30"x24"

SIDEWALK
CLOSED

DETOUR

R9-9
24"x12"

M4-9aR
30"x24"

mounted on Type 3 barricade

350'

Washington Blvd

ARLINGTON
MEMORIAL CIRCLE
CLOSED
AHEAD

W20-3 (mod.)
36"x36"

R11-2
48"x30"

W1-6L
48"x24"

mounted on Type 3 barricade

ROAD
CLOSED

SEE SHEET N12

## LEGEND

Type 3 barricade

Traffic Drum

| NO. | DATE | BY | REVISIONS |
|---|---|---|---|
| | | | |
| | | | |
| | | | |
| | | | |

U.S. DEPARTMENT OF TRANSPORTATION
FEDERAL HIGHWAY ADMINISTRATION
OFFICE OF FEDERAL LANDS HIGHWAY

0 50 100
SCALE IN FEET

GEORGE WASHINGTON MEMORIAL PARKWAY

# TEMPORARY TRAFFIC CONTROL PLAN FOR THE CONSTRUCTION OF THE ARCH

DETOUR ROUTE

M:\PROJECTS\gwmp\11(4)\Prof_Dev\CADD\AMC Arch\N Sheets\NXX-YX-Memorial Circle- ttc.dgn [DETOUR ROUTE - SHEET]

21 May 2026 6:19 PM

NPS PMIS No. XXXXXX NPS Drwg No. XXX/XXXX

| PROJECT | SHEET NUMBER |
|---|---|
| DC NP GWMP ARCH TAR 2026 | N11 |

**SEE SHEET N11**

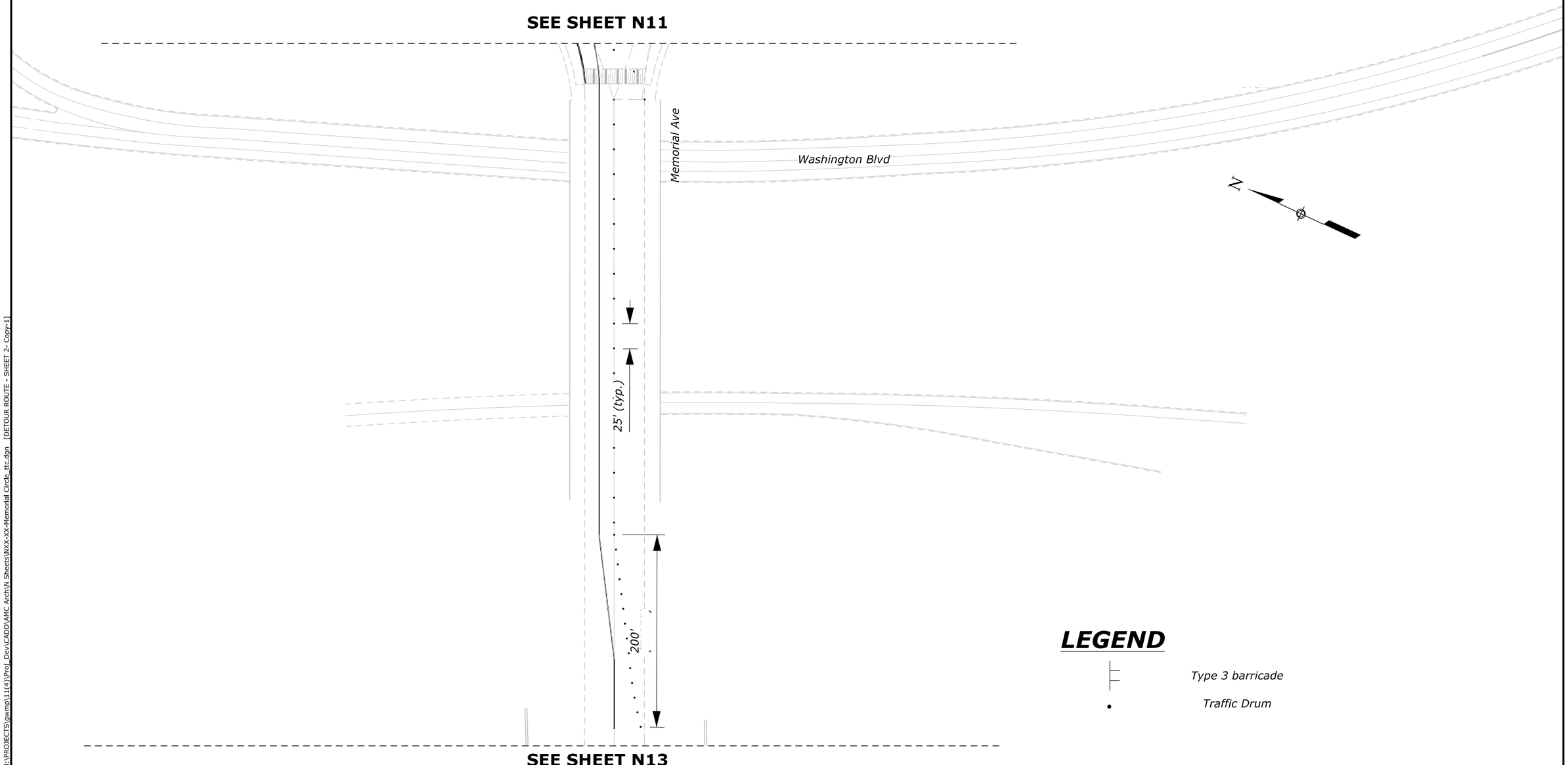


**SEE SHEET N13**

## LEGEND

Type 3 barricade

Traffic Drum

| NO. | DATE | BY | REVISIONS |
|---|---|---|---|
| | | | |
| | | | |
| | | | |
| | | | |

U.S. DEPARTMENT OF TRANSPORTATION
FEDERAL HIGHWAY ADMINISTRATION
OFFICE OF FEDERAL LANDS HIGHWAY

0 50 100
SCALE IN FEET

GEORGE WASHINGTON MEMORIAL PARKWAY

# TEMPORARY TRAFFIC CONTROL PLAN FOR THE CONSTRUCTION OF THE ARCH

DETOUR ROUTE

M:\PROJECTS\gwmp\11(4)\Proj_Dev\CADD\AMC Arch\N Sheets\NXX-XX-Memorial Circle_ttc.dgn [DETOUR ROUTE - SHEET 2 - Copy-1]

21 May 2026 6:19 PM

| PROJECT | SHEET NUMBER |
|---|---|
| DC NP GWMP ARCH TAR 2026 | N12 |

**SEE SHEET N12**

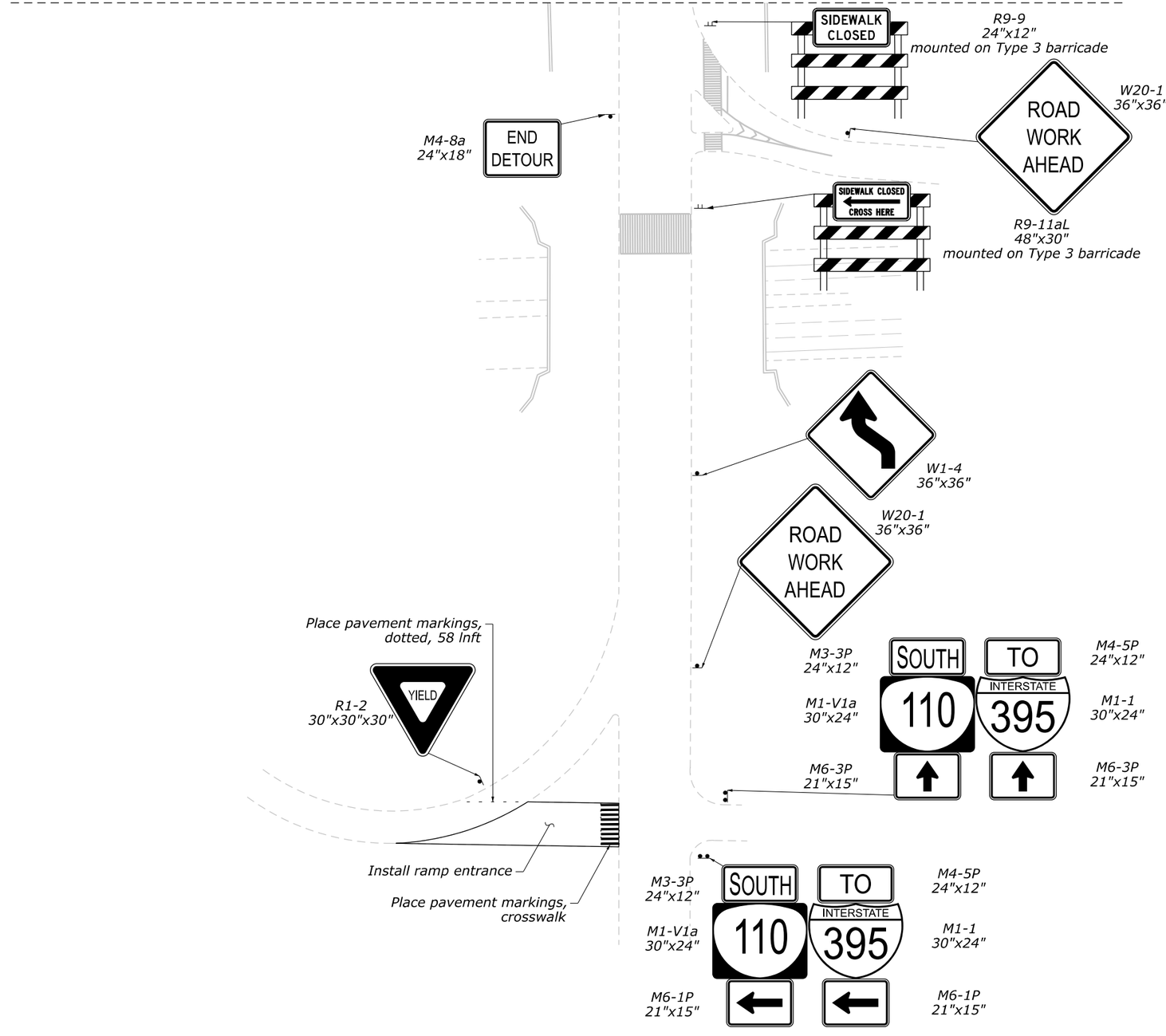


## LEGEND

Type 3 barricade

Traffic Drum

| NO. | DATE | BY | REVISIONS |
|---|---|---|---|
| | | | |
| | | | |
| | | | |
| | | | |

U.S. DEPARTMENT OF TRANSPORTATION
FEDERAL HIGHWAY ADMINISTRATION
OFFICE OF FEDERAL LANDS HIGHWAY

0 50 100
SCALE IN FEET

GEORGE WASHINGTON MEMORIAL PARKWAY

# TEMPORARY TRAFFIC CONTROL PLAN FOR THE CONSTRUCTION OF THE ARCH

DETOUR ROUTE

M:\PROJECTS\gwmp\11(4)\Proj_Dev\CADD\AMC Arch\N Sheets\NXX-XX-Memorial Circle_ttc.dgn [DETOUR ROUTE - SHEET 3]

21 May 2026 6:19 PM

NPS PMIS No. XXXXXX NPS Drwg No. XXX/XXXXXX

| PROJECT | SHEET NUMBER |
|---|---|
| DC NP GWMP ARCH TAR 2026 | P01 |

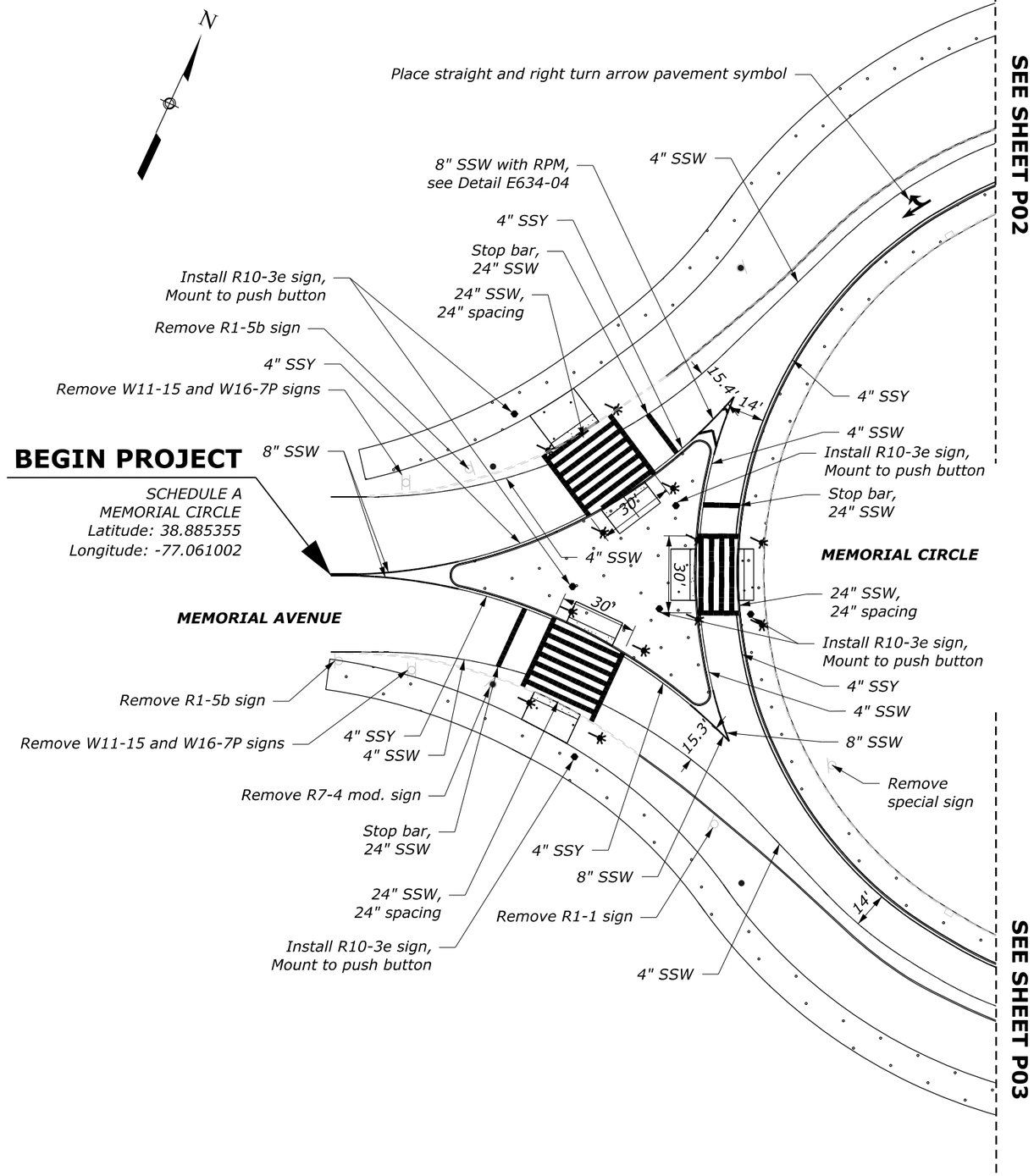


| NO. | DATE | BY | REVISIONS |
|---|---|---|---|
| | | | |
| | | | |
| | | | |
| | | | |

U.S. DEPARTMENT OF TRANSPORTATION
FEDERAL HIGHWAY ADMINISTRATION
OFFICE OF FEDERAL LANDS HIGHWAY

0 25 50
SCALE IN FEET

GEORGE WASHINGTON MEMORIAL PARK

# PAVEMENT MARKING AND SIGNING PLAN

M:\PROJECTS\gwmp\11(4)\Proj_Dev\CADD\AMC Arch\P01-P03_Memorial Circle.dgn [P01 (SHEET)]
21 May 2026 7:12 PM

NPS PMIS No. XXXXXX NPS Drwg No. XXX/XXXXXX

| PROJECT | SHEET NUMBER |
|---|---|
| DC NP GWMP ARCH TAR 2026 | P02 |

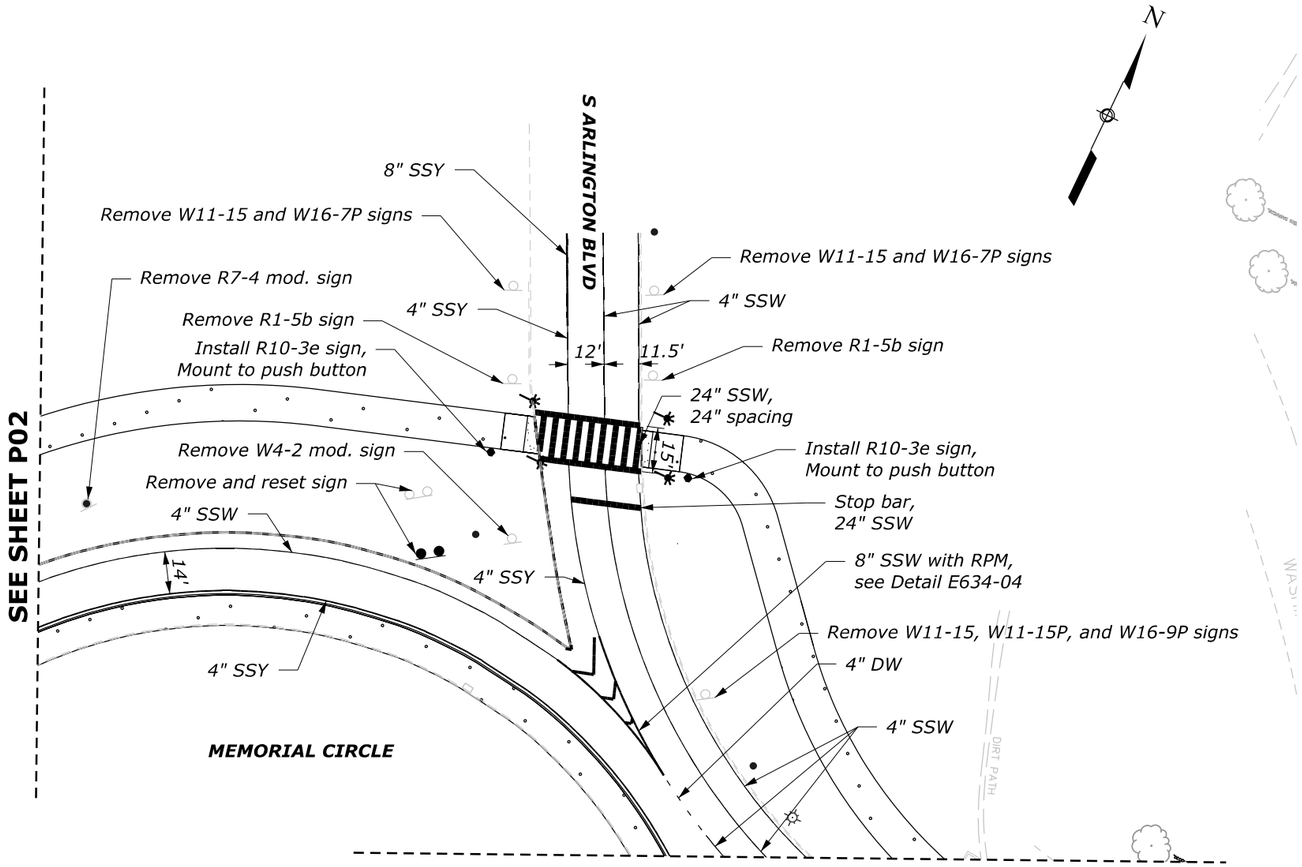


| NO. | DATE | BY | REVISIONS |
|---|---|---|---|
| | | | |
| | | | |
| | | | |
| | | | |

U.S. DEPARTMENT OF TRANSPORTATION
FEDERAL HIGHWAY ADMINISTRATION
OFFICE OF FEDERAL LANDS HIGHWAY

0 25 50
SCALE IN FEET

GEORGE WASHINGTON MEMORIAL PARK

# PAVEMENT MARKING AND SIGNING PLAN

M:\PROJECTS\gwmp\11(4)\Proj_Dev\CADD\AMC Arch\P01-P03_Memorial Circle.dgn [P02 SHEET]
21 May 2026 7:12 PM

NPS PMIS No. XXXXXX NPS Drwg No. XXX/XXXXXX

| PROJECT | SHEET NUMBER |
|---|---|
| DC NP GWMP ARCH TAR 2026 | P03 |

SEE SHEET P02

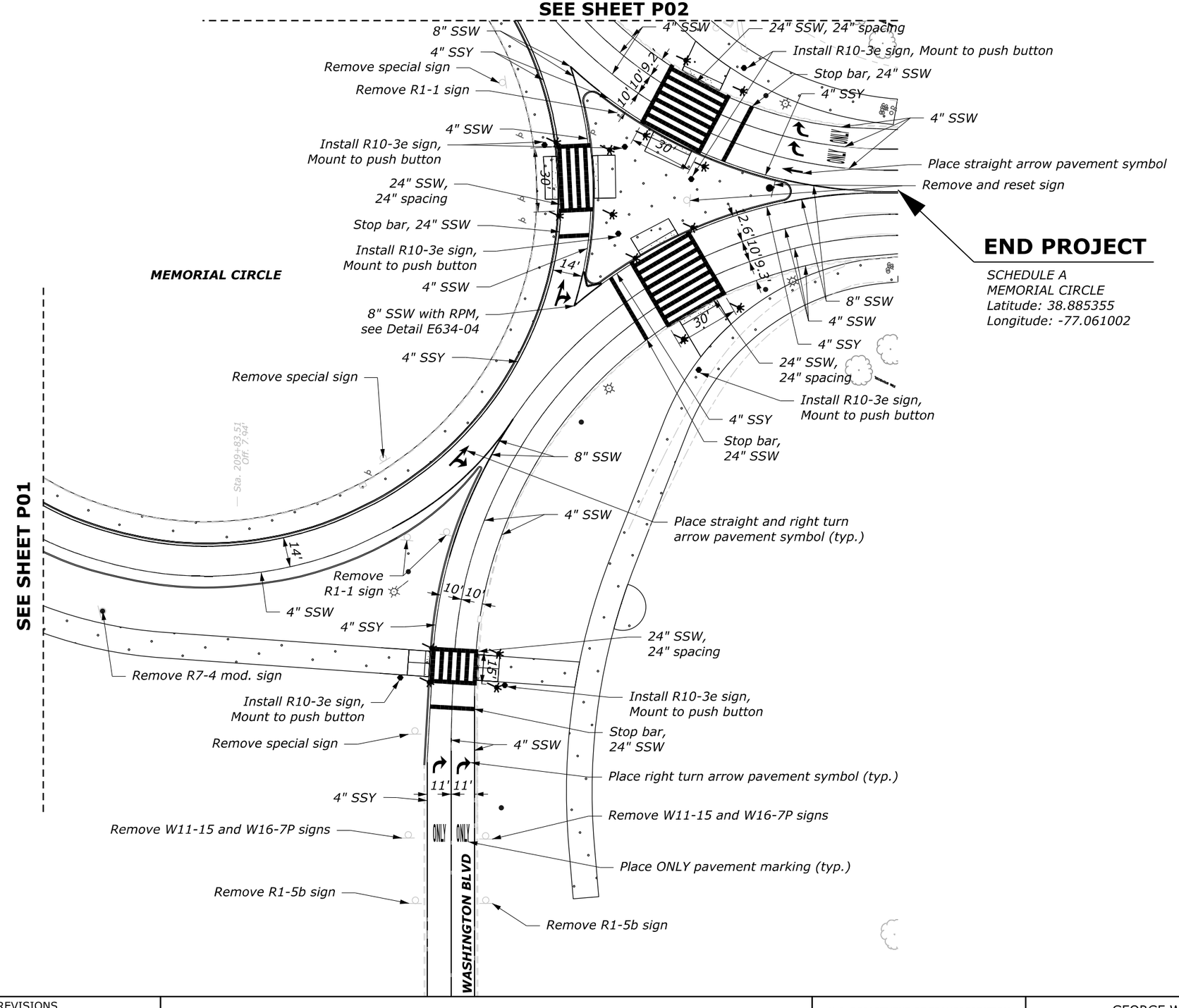


| NO. | DATE | BY | REVISIONS |
|---|---|---|---|
| | | | |
| | | | |
| | | | |
| | | | |

U.S. DEPARTMENT OF TRANSPORTATION
FEDERAL HIGHWAY ADMINISTRATION
OFFICE OF FEDERAL LANDS HIGHWAY

0 25 50
SCALE IN FEET

GEORGE WASHINGTON MEMORIAL PARK

# PAVEMENT MARKING AND SIGNING PLAN

21 May 2026 7:12 PM M:\PROJECTS\gwmp\11(4)\Proj_Dev\CADD\AMC Arch\P01-P03_Memorial Circle.dgn [P03 [SHEET]]

| PROJECT | SHEET NUMBER |
|---|---|
| DC NP GWMP ARCH TAR 2026 | S01 |

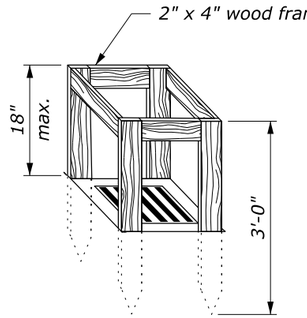


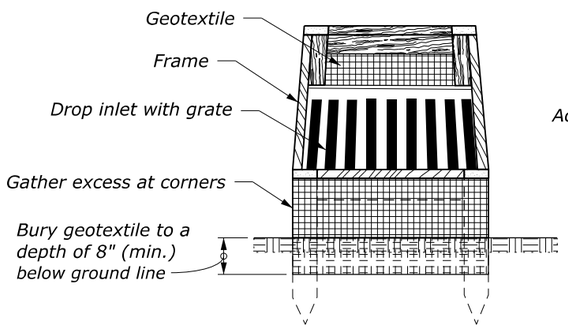


## SILT FENCE DROP INLET PROTECTION (TYPE A)

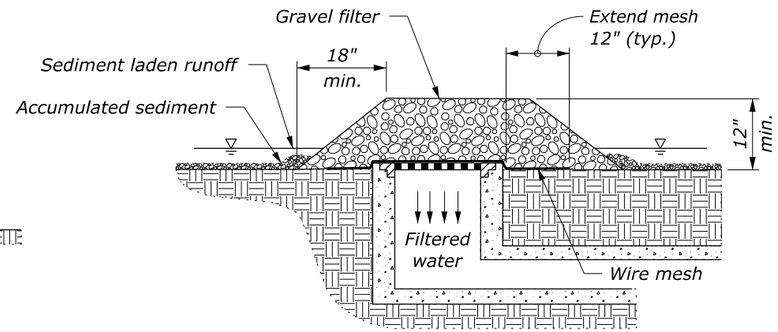


## GRAVEL AND WIRE MESH DROP INLET PROTECTION (TYPE B)

### NOTE:

1. For gravel filters use 2" to 3" diameter coarse aggregate.
2. Use wire mesh with ½" x ½" openings.
3. Use type A inlet protection in sump locations only.
4. Use type B inlet protection only in sump locations where heavy concentrated flows are not expected. Do not use where ponding around the structure might cause inconvenience or damage.
5. Provide silt fence drop inlet protection geotextile conforming to subsection 713.16(a).

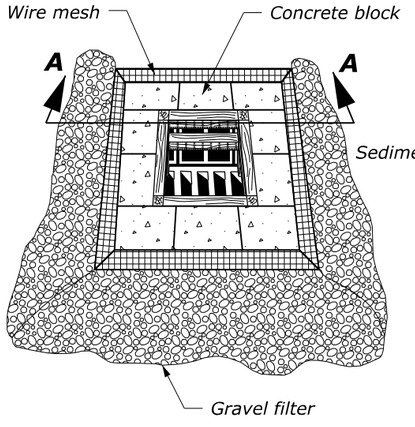


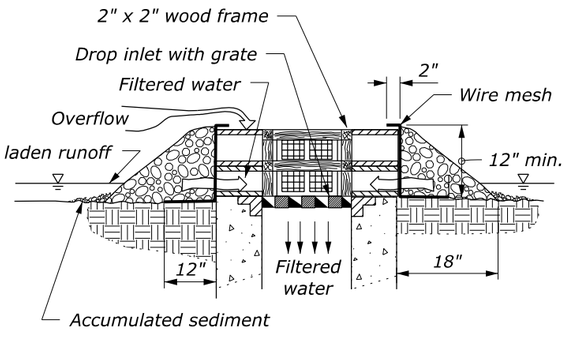


SECTION A-A

## BLOCK AND GRAVEL DROP INLET PROTECTION (TYPE C)

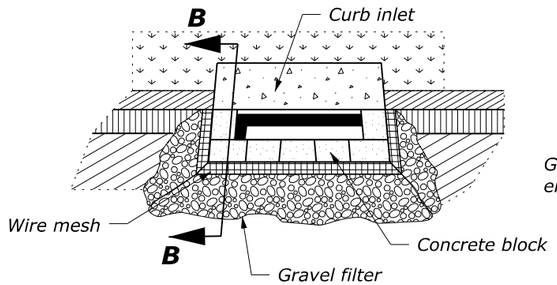


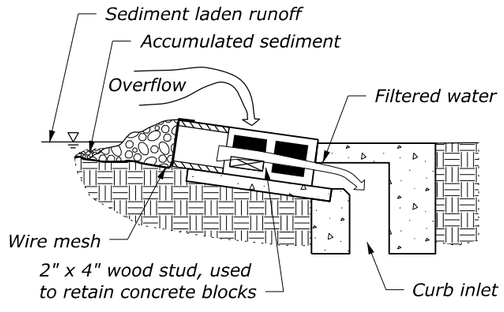


SECTION B-B

## CURB INLET PROTECTION, BLOCK AND GRAVEL (TYPE D)

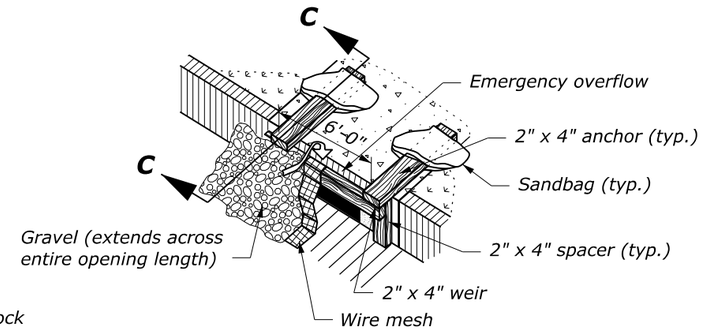


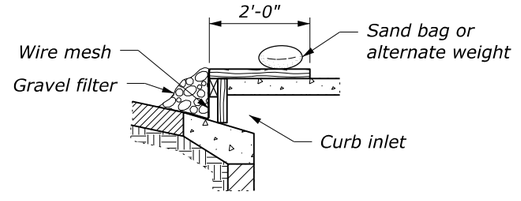


SECTION C-C

## CURB INLET PROTECTION, WOODEN WEIR (TYPE E)

NO SCALE

| U.S. DEPARTMENT OF TRANSPORTATION, FHWA<br>OFFICE OF FEDERAL LANDS HIGHWAY | FLH STANDARD<br>157-2 |
|---|---|
| **TEMPORARY INLET PROTECTION** | SPECIFICATION<br>FP-24, FP-14 |
| | APPROVED FOR USE<br>1/2024 |

M:\PROJECTS\gwmp\11(4)\Proj_Dev\CADD\AMC Arch\Std-Det\Std157-2.dgn [Std 157-2]
21 May 2026 1:49 PM

| PROJECT | SHEET NUMBER |
|---|---|
| DC NP GWMP ARCH TAR 2026 | S02 |

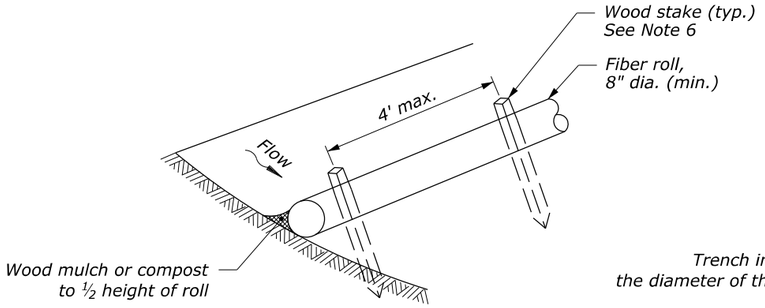


UNTRENCHED INSTALLATION

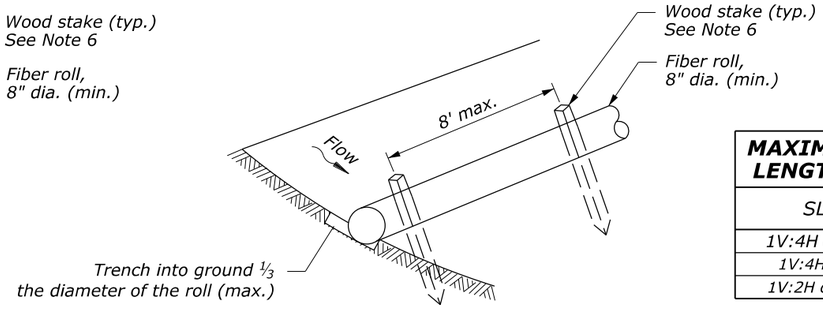


ENTRENCHED INSTALLATION

## FIBER ROLL ISOMETRIC VIEW

| MAXIMUM ALLOWABLE SLOPE LENGTH ABOVE FIBER ROLLS | |
|---|---|
| SLOPE | MAX INTERVAL |
| 1V:4H or Flatter | 20 ft |
| 1V:4H - 1V:2H | 15 ft |
| 1V:2H or Steeper | 10 ft |

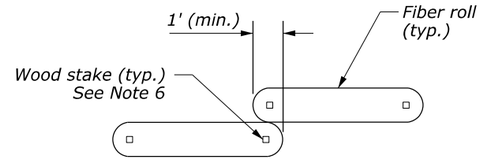


## FIBER ROLL OVERLAP

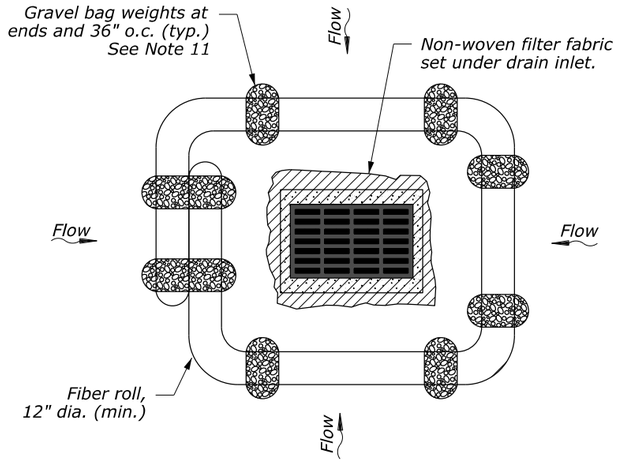


## INLET PROTECTION

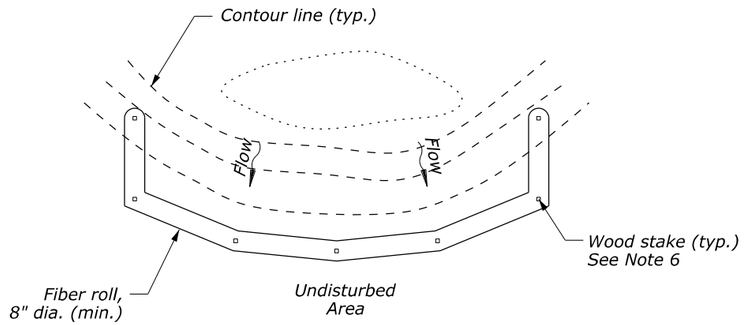


## PLAN VIEW

## NOTES:

1. Provide fiber rolls meeting the requirements of Subsection 713.12.
2. Use fiber rolls with a minimum 8-inch diameter. For drain inlet protection, use fiber rolls with a minimum 12-inch diameter.
3. Prior to installation, clear all obstructions including rocks, clods, and debris greater than 1-inch that may interfere with proper function of the fiber roll.
4. For untrenched installation, blow or hand place mulch or compost on uphill side of the slope along the fiber roll.
5. Place fiber rolls on level grade and parallel to contours. Extend both ends of the fiber roll at least 8 feet upslope at 45 degrees to the main alignment.
6. Use wood stakes with a minimum nominal cross section of 2- by 2-inch and of sufficient length to attain a minimum of 12 inches into the ground and 3 inches protruding above the roll. Provide wood stakes meeting the requirements of Subsection 713.08(a).
7. When more than one fiber roll is needed, overlap ends 12 inches minimum and stake.
8. Remove sediment deposits when accumulation is one-half the height of the exposed fiber roll.
9. Replace biodegradable fiber rolls 6 months after installation and photodegradable fiber rolls 12 months after installation.
10. When fiber rolls are required on paved surfaces, use gravel bags to support them as shown on the inlet protection view.
11. Provide gravel bag weights meeting the requirements of Subsection 713.13.

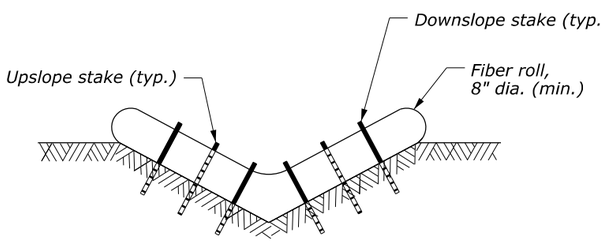


V-DITCH

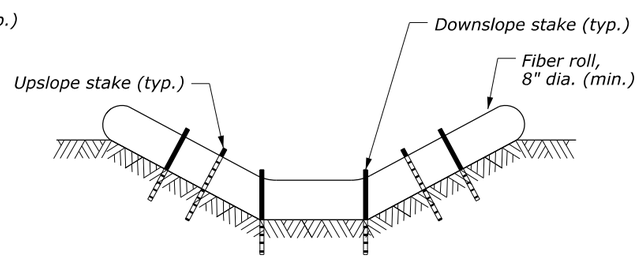


TRAPEZOIDAL DITCH

## FIBER ROLL CHECK DAM CROSS-SECTIONS

| FIBER ROLL CHECK DAM SPACING TABLE | | |
|---|---|---|
| DITCH GRADE * | CHECK DAM SPACING (S)** | |
| | 8" HIGH | 12" HIGH |
| 2% | 33' | 50' |
| 3% | 22' | 33' |
| 4% | 16' | 25' |
| 5% | 13' | 20' |

* Do not install check dams on grades below 2%
** Adjust spacing as approved based on site conditions

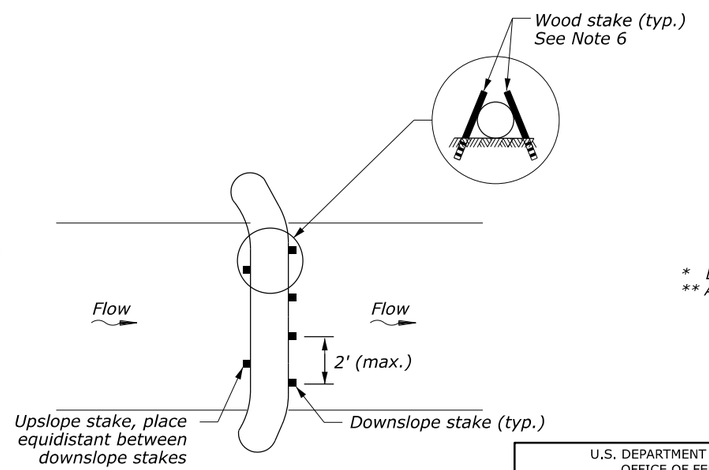


## FIBER ROLL CHECK DAM PLAN VIEW

NO SCALE

U.S. DEPARTMENT OF TRANSPORTATION, FHWA
OFFICE OF FEDERAL LANDS HIGHWAY

**FIBER ROLL**

EFLHD DETAIL
E157-04

SPECIFICATION
FP-24, FP-14

APPROVED FOR USE
05/2024

M:\PROJECTS\gwmp\11(4)\Proj_Dev\CADD\AMC Arch\Std-Det\E157-04.dgn [Sheet]
21 May 2026 1:54 PM

| PROJECT | SHEET NUMBER |
|---|---|
| DC NP GWMP ARCH TAR 2026 | S03 |

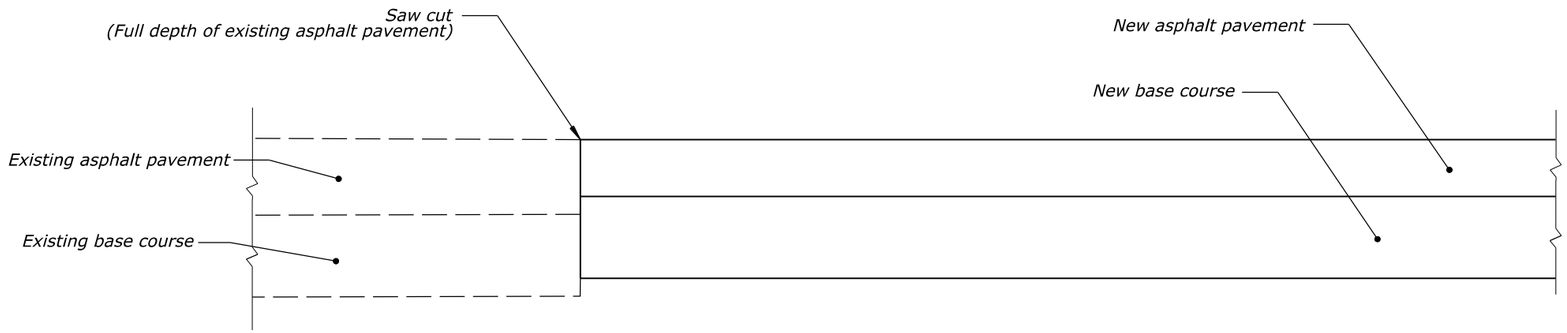


## NEW PAVEMENT

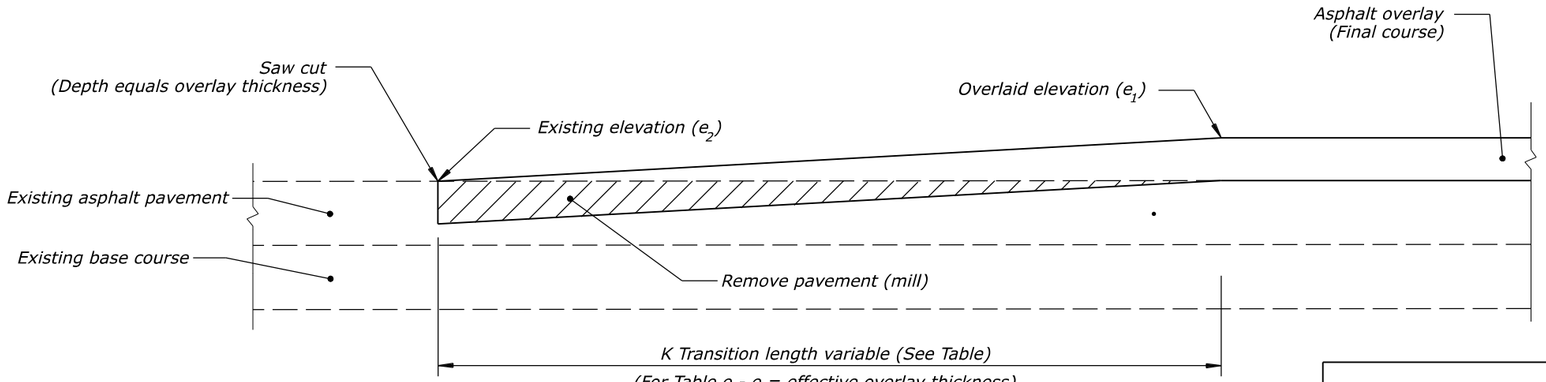


## OVERLAY

### NOTE:

*Provide a transition length in feet that is not less than the value obtained by multiplying the effective overlay thickness in inches (difference between the existing and overlaid elevations) by the K value from the Table for the posted speed of the roadway.*

*Use $K*[e_1 - e_2] = T$, or $K*[d_1 - d_2] = T$ (whichever applies), to obtain the transition length. (Minimum transition length=30 feet)*

*Example :*
*If the posted speed is 55 MPH*
*Effective overlay thickness = 2 inches*
*Then the minimum transition length =*
*2 inches x 42.5 ft./in. = 85 feet.*

**K VALUE TABLE (ft/in)**

| POSTED SPEED (MPH) * | 30 | 35 | 40 | 45 | 50 | 55 | 60 | 65 | 70 | 75 |
|---|---|---|---|---|---|---|---|---|---|---|
| K | 30 | 32.5 | 35 | 37.5 | 40 | 42.5 | 45 | 47.5 | 50 | 52.5 |

* Use a K Value of 30 for speeds less than 30 MPH.

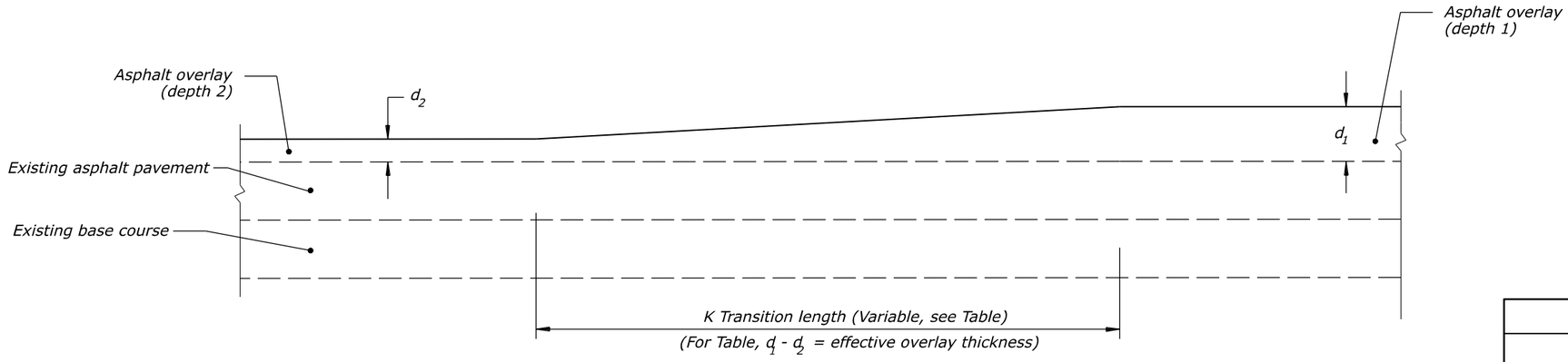


## OVERLAY - DEPTH TRANSITIONS

NO SCALE

U.S. DEPARTMENT OF TRANSPORTATION, FHWA
OFFICE OF FEDERAL LANDS HIGHWAY

**PAVEMENT TRANSITIONS**

| EFLHD DETAIL |
|---|
| E401-01 |
| SPECIFICATION |
| FP-24, FP-14 |
| APPROVED FOR USE |
| 05/2024 |

M:\PROJECTS\gwmp\11(4)\Proj_Dev\CADD\AMC Arch\Std-Det\E401-01.dgn [Sheet]
21 May 2026 1:33 PM

| PROJECT | SHEET NUMBER |
|---|---|
| DC NP GWMP ARCH TAR 2026 | S04 |

## NOTE:

*Place transverse expansion joints at intervals of not more than 60 feet for curbs and sidewalks.*

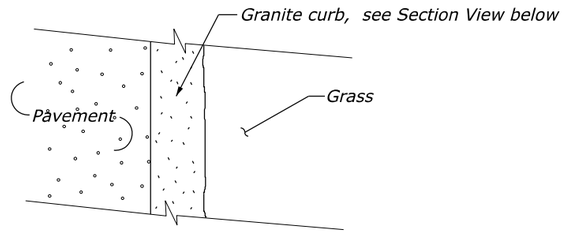


PLAN VIEW

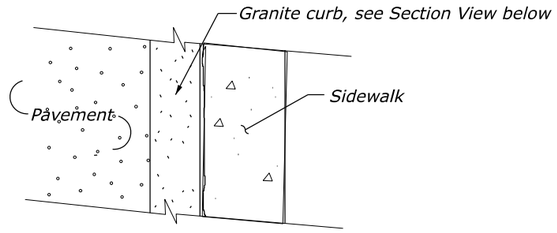


PLAN VIEW

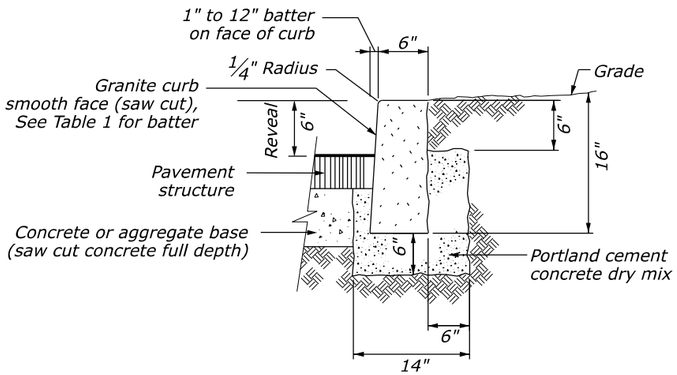


SECTION VIEW

**STONE CURB TYPE 1, 16" DEPTH (GRANITE TYPE A OR B) (WITHOUT SIDEWALK)**

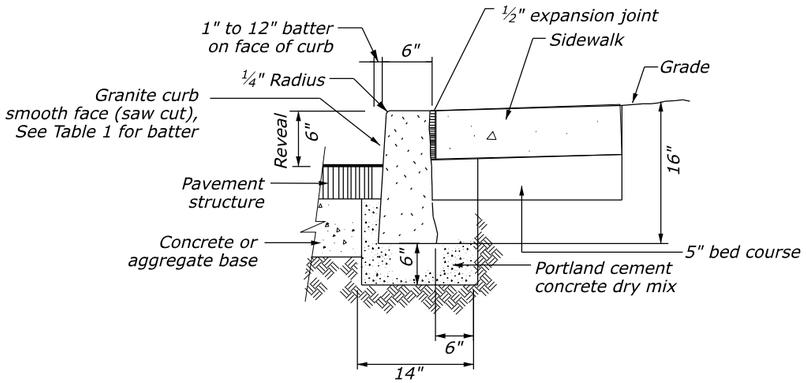


SECTION VIEW

**STONE CURB TYPE 1, 16" DEPTH (GRANITE TYPE A OR B) (WITH SIDEWALK)**

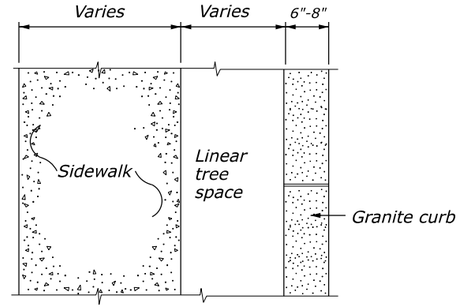


PLAN VIEW

**STONE CURB TYPE 1, 16" DEPTH (GRANITE TYPE A OR B) (WITH SIDEWALK AND LINEAR TREE SPACE)**

### TABLE 1

| BATTER FOR GRANITE CURB | |
|---|---|
| **TYPE** | **BATTER (H:V)** |
| A | 1:12 |
| B | 3/4:10 |

NO SCALE

U.S. DEPARTMENT OF TRANSPORTATION, FHWA
OFFICE OF FEDERAL LANDS HIGHWAY

# GRANITE CURBS

EFLHD DETAIL
E609-02

SPECIFICATION
FP-24. FP-14

APPROVED FOR USE
05/2024

M:\PROJECTS\gwmp\11(4)\Proj_Dev\CADD\AMC Arch\Std-Det\E609-02.dgn [Sheet]
21 May 2026 2:31 PM

| PROJECT | SHEET NUMBER |
|---|---|
| DC NP GWMP ARCH TAR 2026 | S05 |

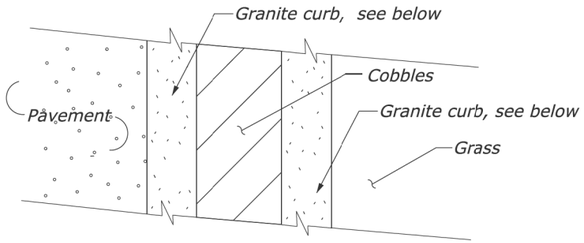


**PLAN**

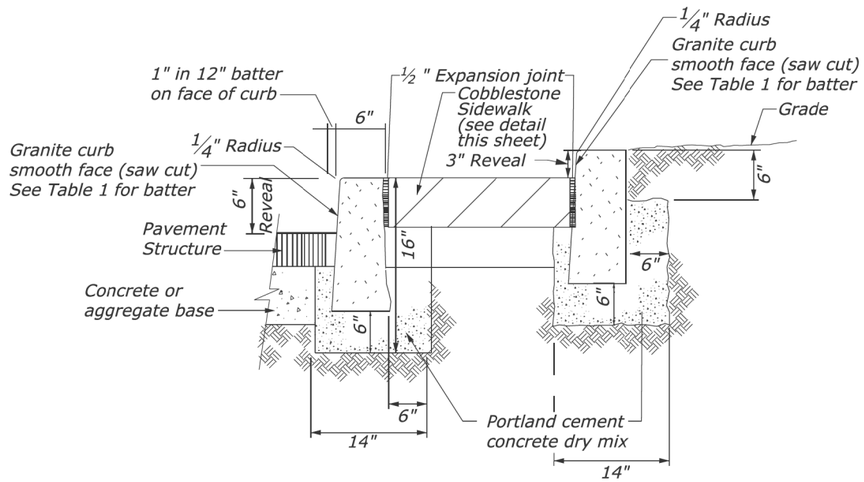


**SECTION**

*(WITH COBBLES)*

*STONE CURB TYPE 1, 16" DEPTH (GRANITE TYPE A OR B)*

*NOTE:*

*Place transverse expansion joints at intervals of not more than 60 feet for curbs and sidewalks.*

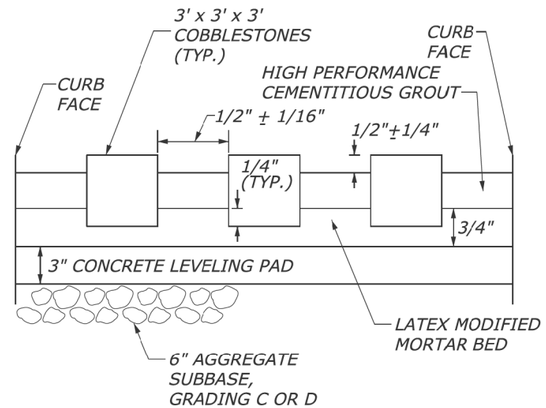


**COBBLESTONE SIDEWALK DETAIL (NTS)**

*NO SCALE*

| U.S. DEPARTMENT OF TRANSPORTATION, FHWA OFFICE OF FEDERAL LANDS HIGHWAY | EFLHD DETAIL E609-02A |
|---|---|
| **EXPOSED AGGREGATE CONCRETE SIDEWALK** | |

M:\PROJECTS\gwmp\11(4)\Proj_Dev\CADD\AMC Arch\Std-Det\E609-02A_Granite Curb w Cobbles.dgn [Sheet]
21 May 2026 2:32 PM

| PROJECT | SHEET NUMBER |
|---|---|
| DC NP GWMP ARCH TAR 2026 | S06 |

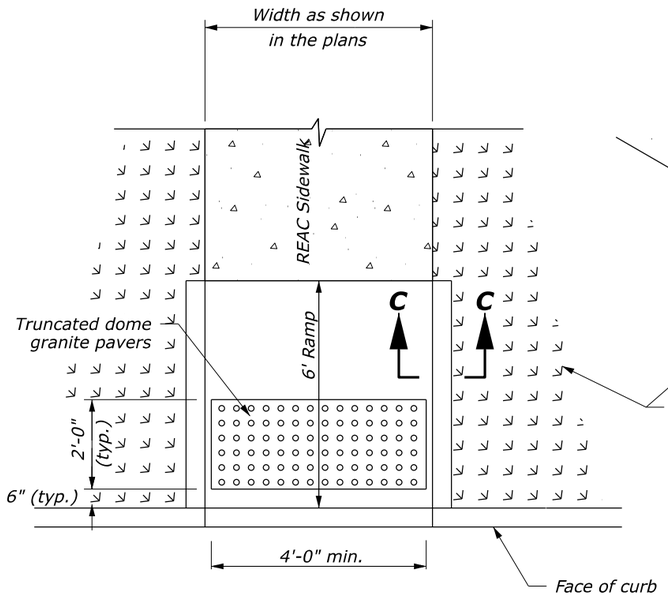


PLAN VIEW

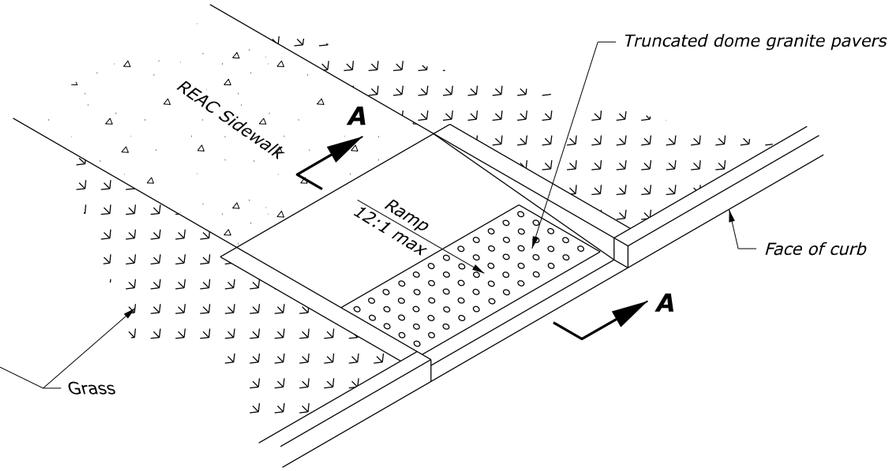


ISOMETRIC VIEW

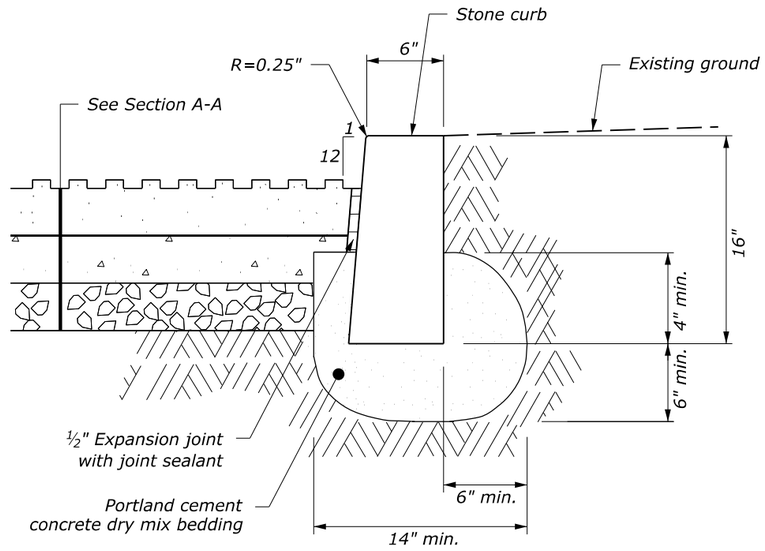


SECTION C-C

# TYPE C RAMP

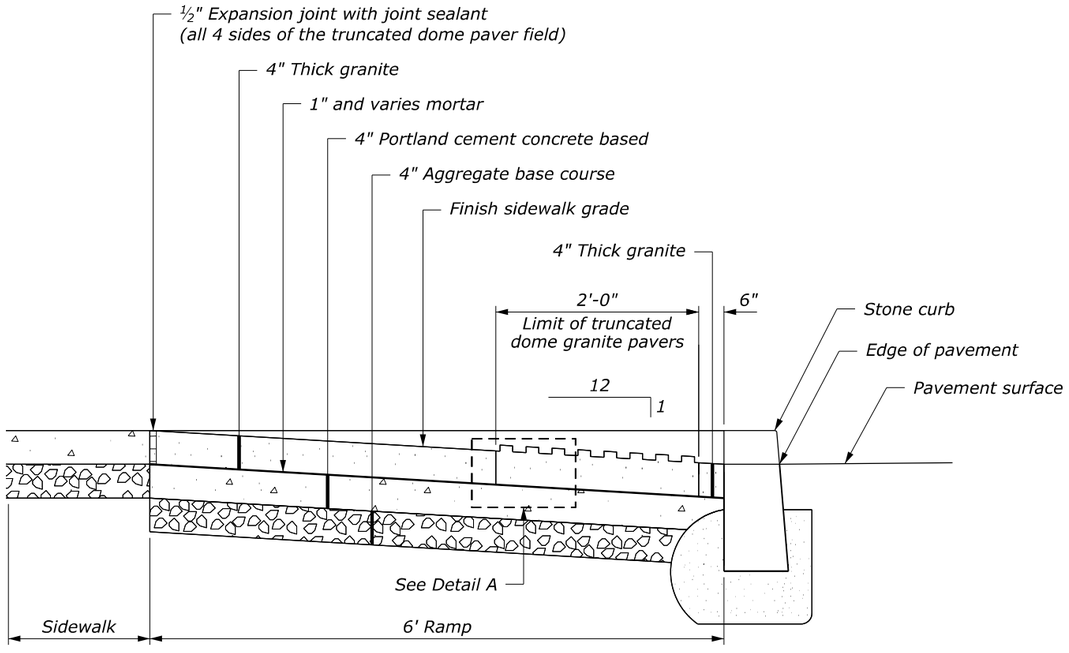


SECTION A-A

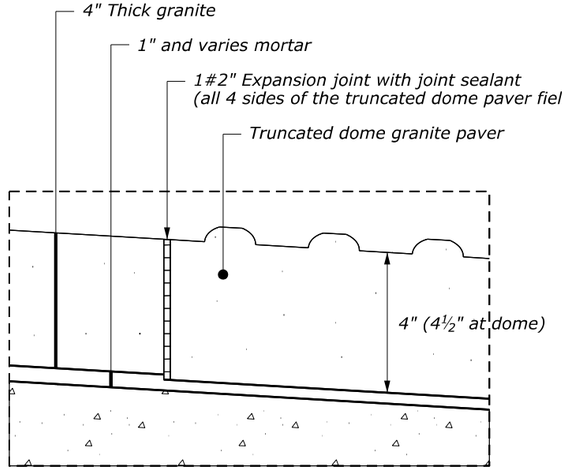


DETAIL A

NO SCALE

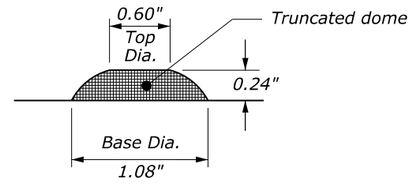


ELEVATION VIEW

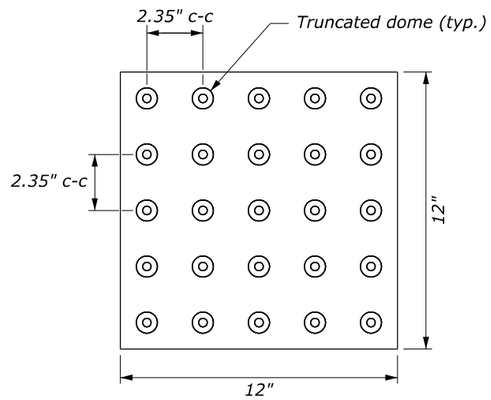


PLAN VIEW

## TRUNCATED DOMES PAVERS

| U.S. DEPARTMENT OF TRANSPORTATION, FHWA<br>OFFICE OF FEDERAL LANDS HIGHWAY | EFLHD DETAIL<br>E610-A |
|---|---|
| **STONE ACCESSIBILITY RAMP CURB RETURN** | |

M:\PROJECTS\gwmp\11(4)\Proj_Dev\CADD\AMC Arch\Std-Det\std610A_AccessibilityTyp-Ramp.dgn [615-4]

21 May 2026 2:40 PM

| PROJECT | SHEET NUMBER |
|---|---|
| DC NP GWMP ARCH TAR 2026 | S07 |

*NOTES:*

1. *Place 1/2-inch transverse expansion joints as directed.*
2. *Place 1/4-inch wide dummy joints to match the adjacent curb or at intervals equal to the width as directed. Place dummy joints to 1/3-inch depth of the sidewalk.*
3. *Finish sidewalks according to Subsection 615.04(b).*
4. *Place construction joints around all structures in the sidewalk.*
5. *Place welded wire fabric on chairs.*

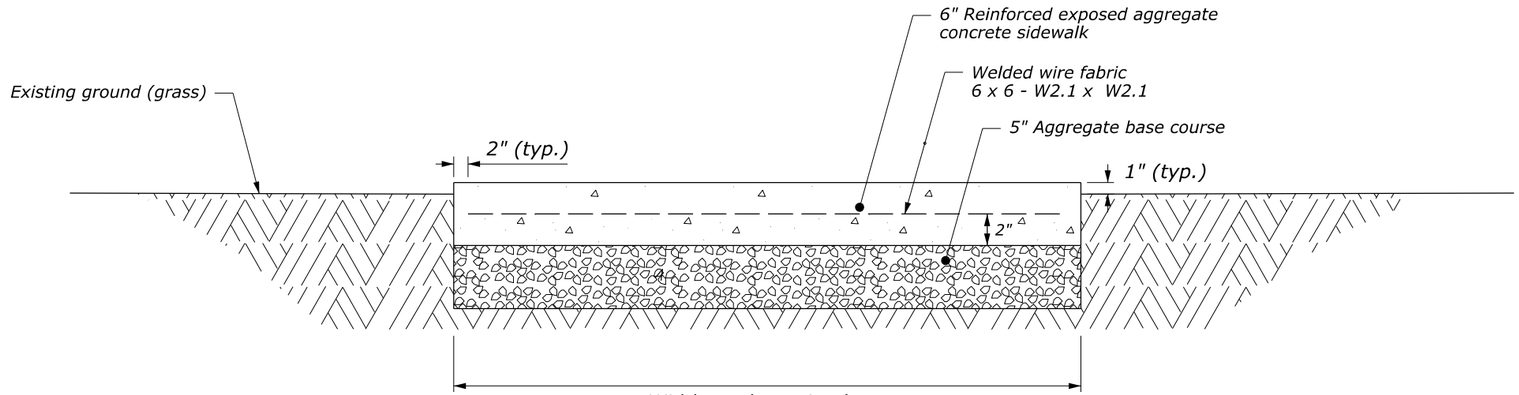


***SIDEWALK WITHOUT CURB***

*NO SCALE*

| U.S. DEPARTMENT OF TRANSPORTATION, FHWA<br>OFFICE OF FEDERAL LANDS HIGHWAY | EFLHD DETAIL<br>E610-B |
|---|---|
| **EXPOSED AGGREGATE CONCRETE SIDEWALK** | |

M:\PROJECTS\gwmp\11(4)\Prof_Dev\CADD\AMC Arch\Std-Det\st610B_Exp-Aggregate-Sidewalk.dgn [Sheet]
21 May 2026 2:35 PM

| PROJECT | SHEET NUMBER |
|---|---|
| DC NP GWMP ARCH TAR 2026 | S08 |

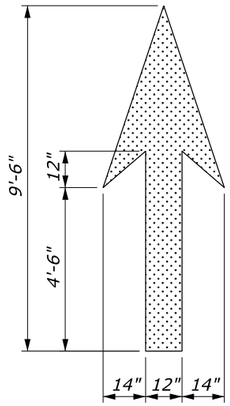


**STRAIGHT ARROW SYMBOL**

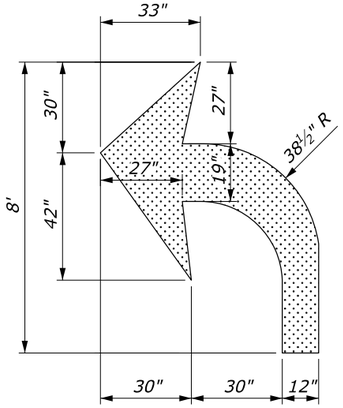


**TURN ARROW SYMBOL**

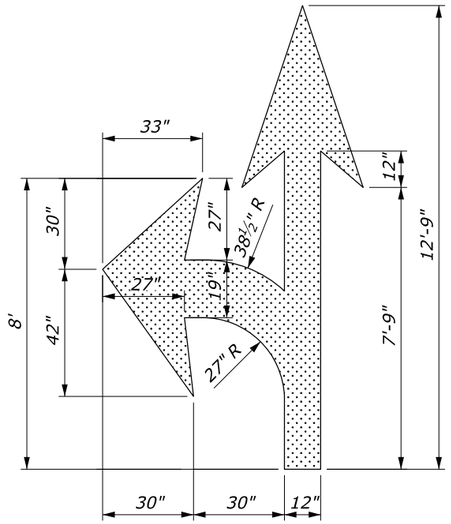


**STRAIGHT/TURN ARROW COMBINATION SYMBOL**

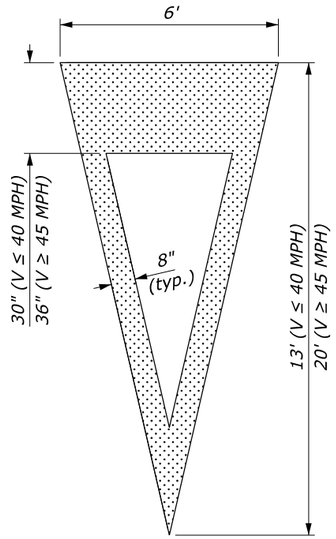


**YIELD AHEAD TRIANGLE SYMBOL**

## NOTES:

1. Place pavement word and symbol markings in accordance with the "Manual on Uniform Traffic Control Devices" (MUTCD), latest edition.
2. Place all letters, numerals, and symbols in accordance with the "Standard Highway Signs", latest edition.
3. Provide Accessibility Symbol marking as indicated in the plans or directed otherwise by the CO in one of the following configurations:

   (a) w/ Symbol only; or
   (b) w/ Symbol, blue background, and white border

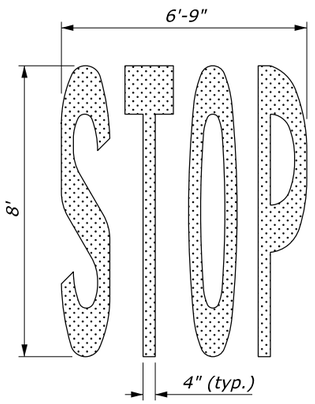


**"STOP" WORD MESSAGE**

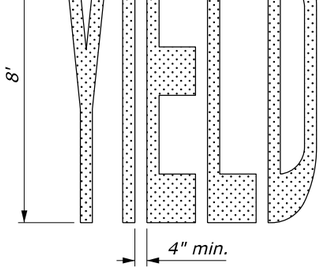


**"YIELD" WORD MESSAGE**

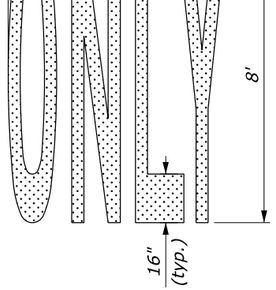


**"ONLY" WORD MESSAGE**

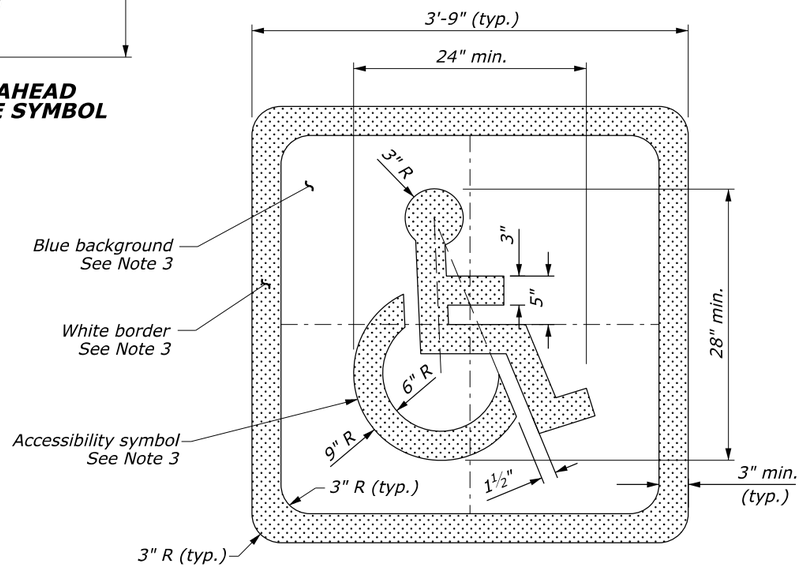


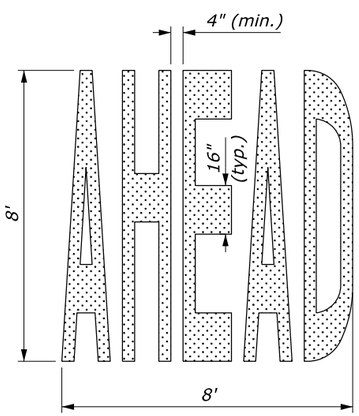


**"AHEAD" WORD MESSAGE**

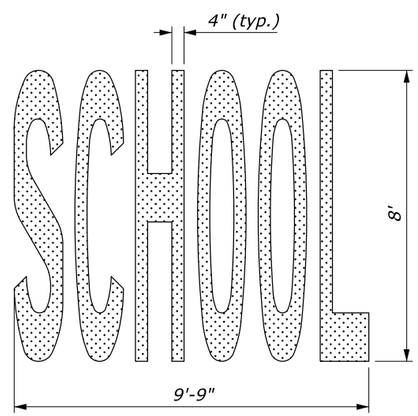


**"SCHOOL" WORD MESSAGE**

| PAVEMENT MARKING AREAS | |
|---|---|
| TYPE | SQFT |
| Accessibility Symbol: | -- |
| w/ Symbol only | 2 |
| w/ Symbol, blue background, and white border | 16 |
| Straight Arrow Symbol | 12 |
| Straight/Turn Arrow Combination Symbol | 26 |
| Turn Arrow Symbol | 16 |
| Yield Ahead Triangle Symbol (V<45 mph) | 26 |
| Yield Ahead Triangle Symbol (V≥45 mph) | 37 |
| "AHEAD" Word Message Marking | 30 |
| "ONLY" Word Message Marking | 21 |
| "SCHOOL" Word Message Marking | 33 |
| "STOP" Word Message Marking | 22 |
| "YIELD" Word Message Marking | 24 |

NO SCALE

U.S. DEPARTMENT OF TRANSPORTATION, FHWA
OFFICE OF FEDERAL LANDS HIGHWAY

# PAVEMENT MARKINGS SYMBOLS AND WORDS

EFLHD DETAIL
E634-01

SPECIFICATION
FP-24, FP-14

APPROVED FOR USE
06/2024

M:\PROJECTS\gwmp\11(4)\Proj_Dev\CADD\AMC Arch\Std-Det\E634-01.dgn [Sheet]
21 May 2026 2:33 PM

| PROJECT | SHEET NUMBER |
|---|---|
| DC NP GWMP ARCH TAR 2026 | S09 |

## NOTES:

1. *Provide reflective markers with either clear (white), yellow or red colors as specified.*
2. *Ensure the shell of the marker is made of one color or a combination of colors the same as the reflector.*

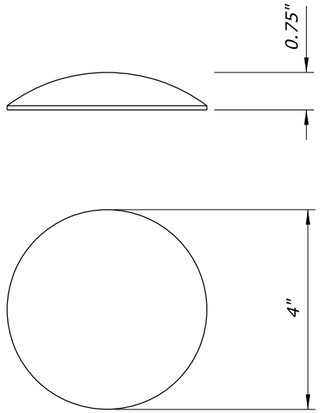


NON-REFLECTIVE

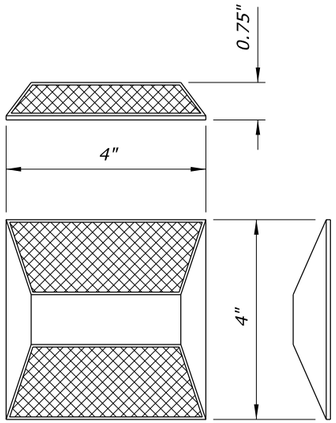


BI-DIRECTIONAL

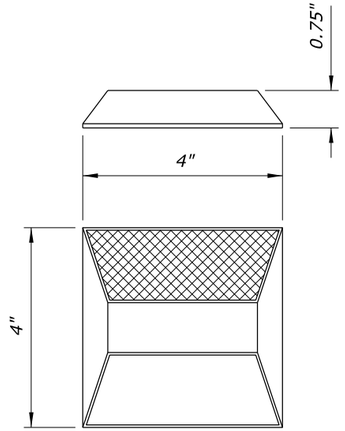


MONO-DIRECTIONAL

## *NON-PLOWABLE PAVEMENT MARKERS*

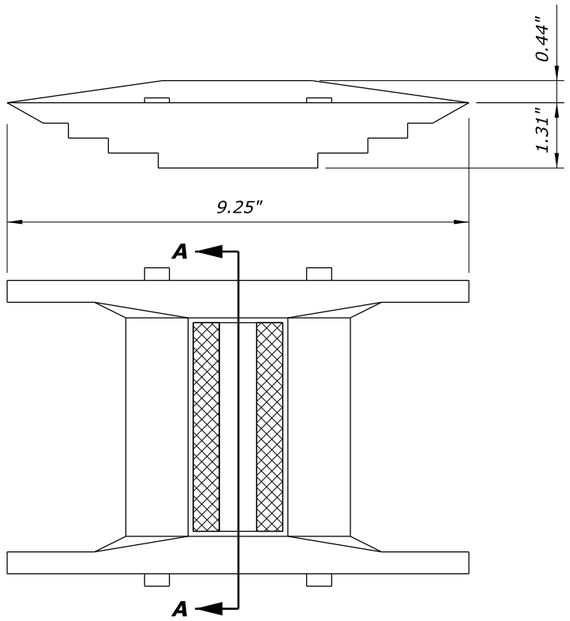


BI-DIRECTIONAL

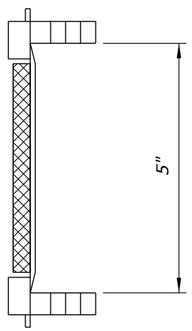


SECTION A-A

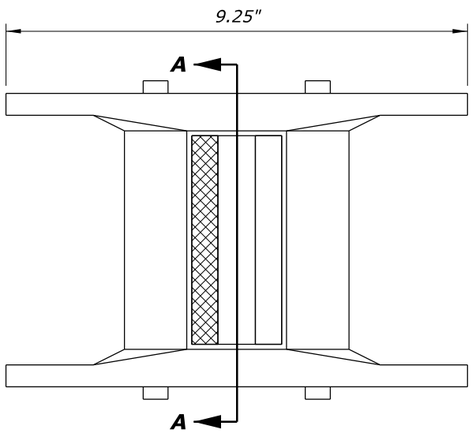


MONO-DIRECTIONAL

***LEGEND:***

*Reflective material*

## *PLOWABLE PAVEMENT MARKERS*

*NO SCALE*

| U.S. DEPARTMENT OF TRANSPORTATION, FHWA<br>OFFICE OF FEDERAL LANDS HIGHWAY | EFLHD DETAIL<br>E634-02 |
|---|---|
| **RAISED PAVEMENT MARKERS** | SPECIFICATION<br>FP-24, FP-14 |
| | APPROVED FOR USE<br>06/2024 |

M:\PROJECTS\gwmp\11(4)\Proj_Dev\CADD\AMC Arch\Std-Det\E634-02.dgn [Sheet]
21 May 2026 2:33 PM

| PROJECT | SHEET NUMBER |
|---|---|
| DC NP GWMP ARCH TAR 2026 | S10 |

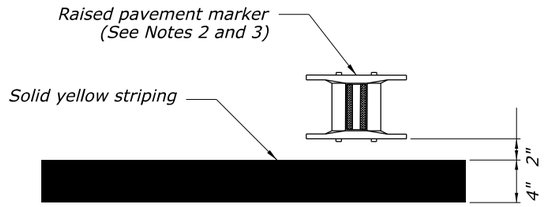


**VIEW A**

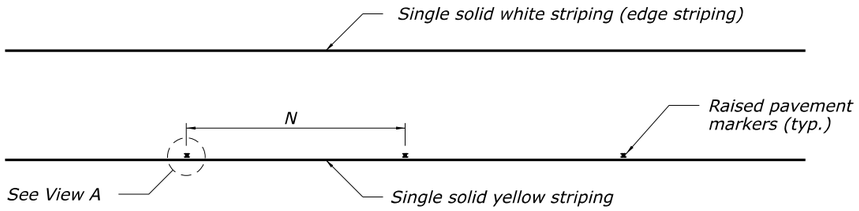


**SINGLE SOLID YELLOW STRIPING
WITH RAISED PAVEMENT MARKERS**

## NOTES:

1. Install striping in accordance with the "Manual on Uniform Traffic Control Devices" (MUTCD), latest edition.
2. When raised pavement markers are required, space and install in accordance with the MUTCD and as shown in this Detail or as directed.
3. When raised pavement markers are required, see Detail E634-02.

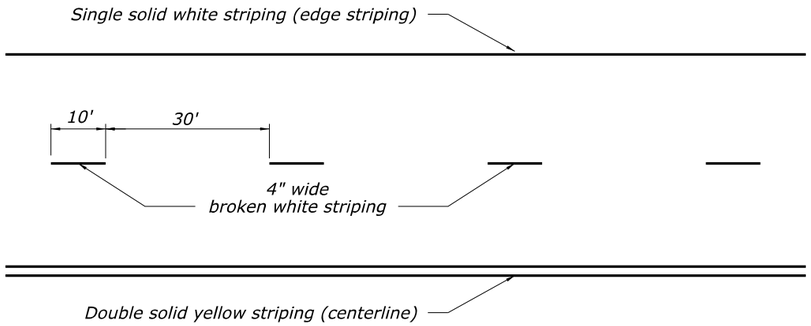


**BROKEN SINGLE WHITE AND
DOUBLE SOLID YELLOW STRIPING**

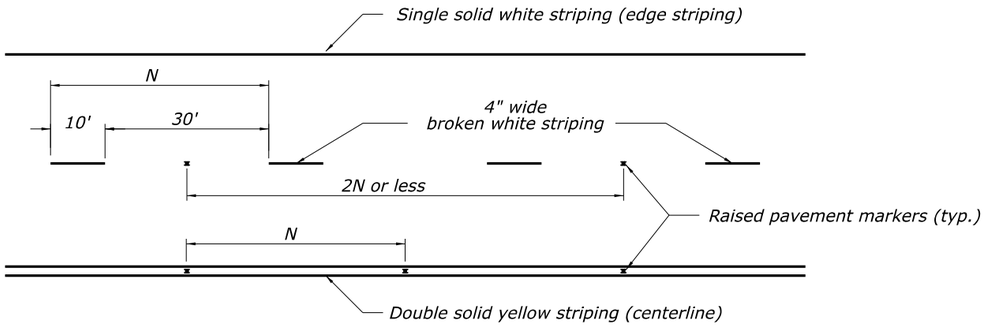


**BROKEN SINGLE WHITE AND
DOUBLE SOLID YELLOW STRIPING
WITH RAISED PAVEMENT MARKERS**

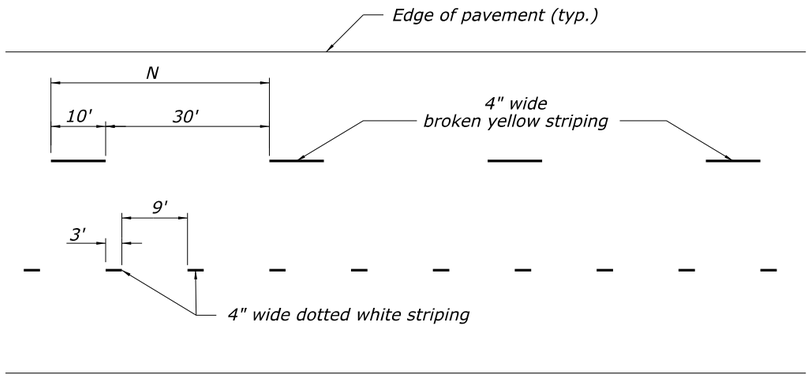


**BROKEN SINGLE YELLOW AND
DOTTED WHITE STRIPING**

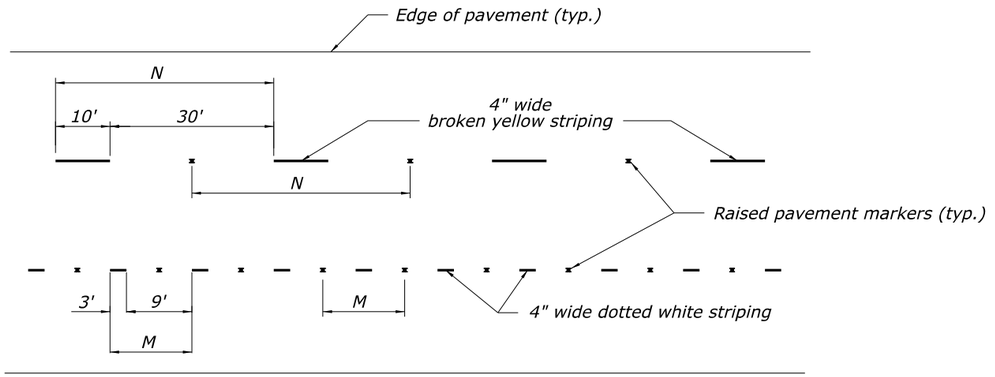


**BROKEN SINGLE YELLOW AND
DOTTED WHITE STRIPING
WITH RAISED PAVEMENT MARKERS**

*NO SCALE*

U.S. DEPARTMENT OF TRANSPORTATION, FHWA
OFFICE OF FEDERAL LANDS HIGHWAY

# PAVEMENT MARKINGS WITH AND WITHOUT RAISED PAVEMENT MARKERS

| EFLHD DETAIL | SPECIFICATION | APPROVED FOR USE |
|---|---|---|
| E634-03 | FP-24, FP-14 | 06/2024 |

M:\PROJECTS\gwmp\11(4)\Proj_Dev\CADD\AMC Arch\Std-Det\E634-03.dgn [Sheet]
21 May 2026 2:33 PM

| PROJECT | SHEET NUMBER |
|---|---|
| DC NP GWMP ARCH TAR 2026 | S11 |

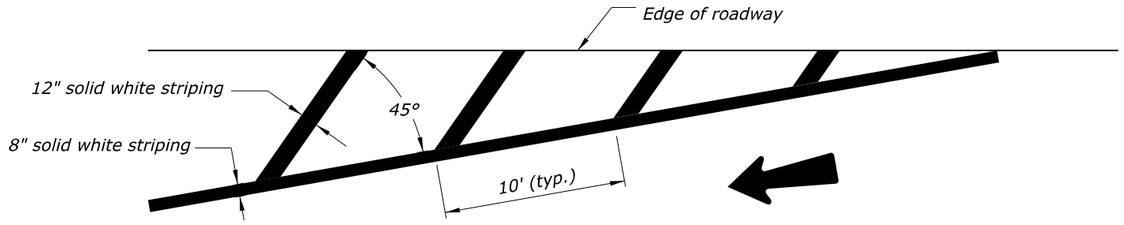


## ONE-WAY TRAFFIC, LANE SHIFT

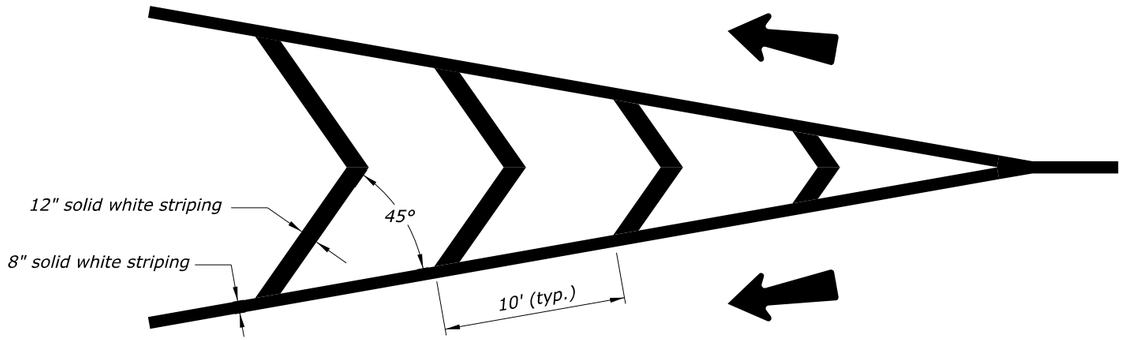


## ONE-WAY TWO-LANE TRAFFIC, LANES SEPARATE

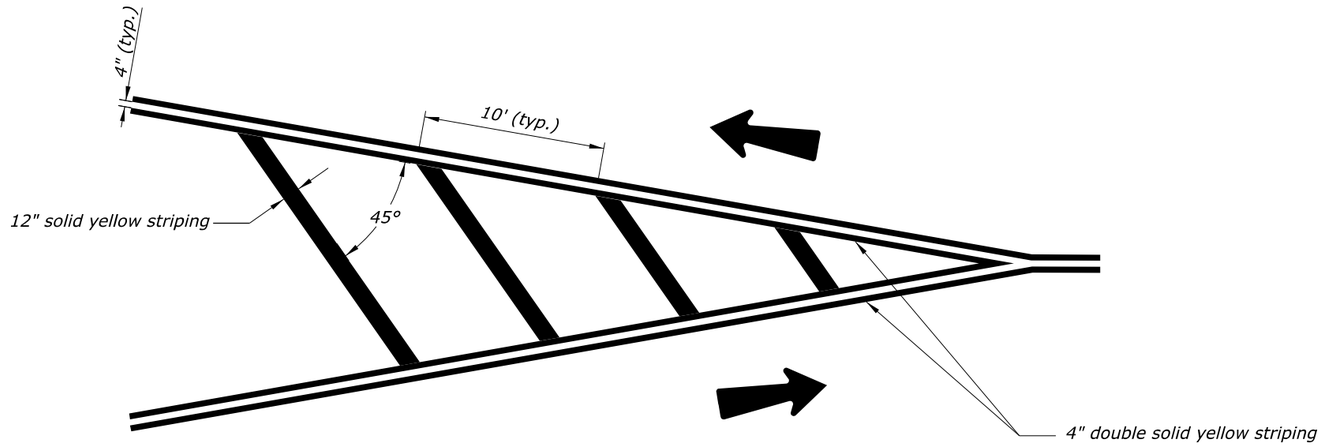


## TWO-WAY TWO-LANE TRAFFIC, LANES SEPARATE

NO SCALE

### NOTES:

1. Install striping in accordance with the "Manual on Uniform Traffic Control Devices" (MUTCD), latest edition.
2. Typical pavement marking widths are shown. Use wider pavement markings when specified in the plans or as directed.

U.S. DEPARTMENT OF TRANSPORTATION, FHWA
OFFICE OF FEDERAL LANDS HIGHWAY

# PAVEMENT MARKINGS IN NEUTRAL AREAS

| EFLHD DETAIL | SPECIFICATION | APPROVED FOR USE |
|---|---|---|
| E634-04 | FP-24, FP-14 | 06/2024 |

M:\PROJECTS\gwmp\11(4)\Proj_Dev\CADD\AMC Arch\Std-Det\E634-04.dgn [Sheet1_without_RPM]
21 May 2026 2:34 PM

| PROJECT | SHEET NUMBER |
|---|---|
| DC NP GWMP ARCH TAR 2026 | S12 |

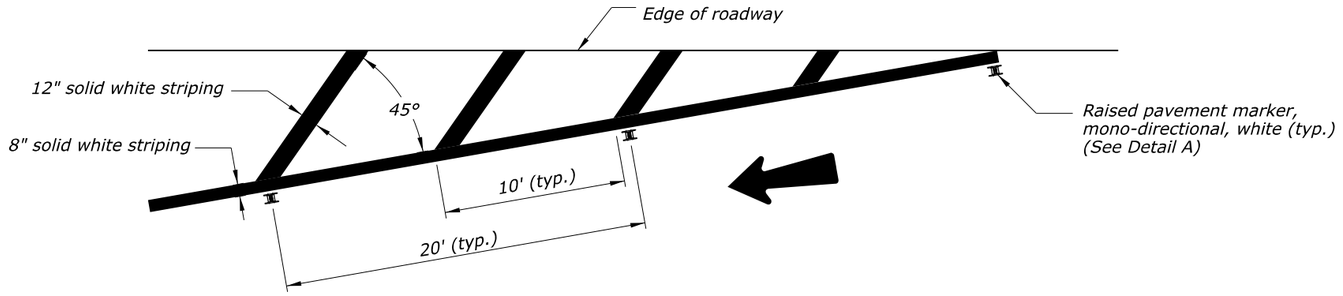


**ONE-WAY TRAFFIC, LANE SHIFT**

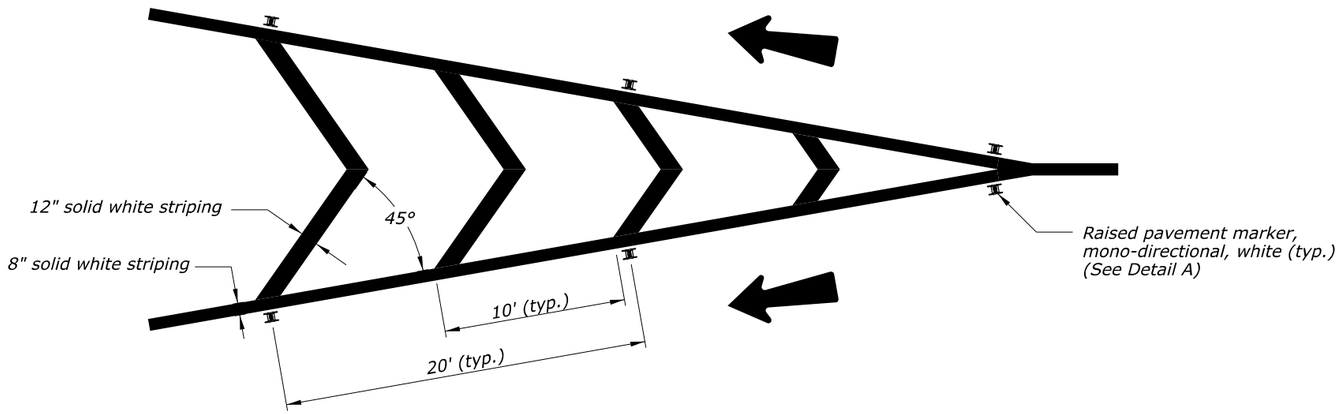


**ONE-WAY TWO-LANE TRAFFIC, LANES SEPARATE**

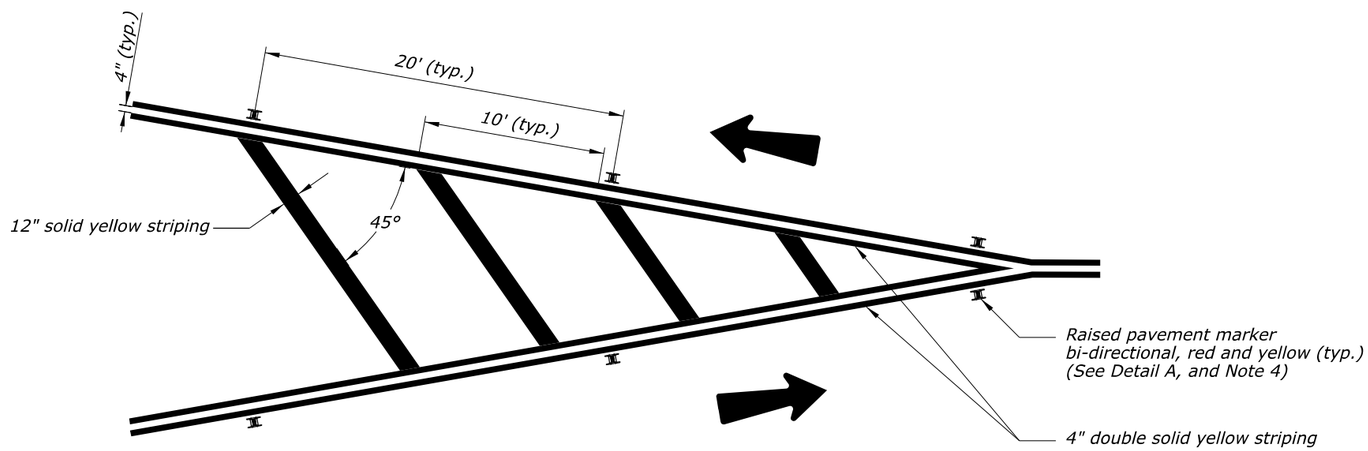


**TWO-WAY TWO-LANE TRAFFIC, LANES SEPARATE**

## NOTES:

1. *Install striping in accordance with the "Manual on Uniform Traffic Control Devices" (MUTCD), latest edition.*
2. *Typical pavement marking widths are shown. Use wider pavement markings when specified in the plans or as directed.*
3. *Space and install raised pavement markers (RPMs) in accordance with the MUTCD, latest edition, and as shown or as directed.*
4. *Detail A shows plowable RPM only; the same positioning applies to non-plowable RPMs. See Detail E634-02 for RPM details.*
5. *Install bi-directional RPMs so that the yellow reflective side is facing the traffic flow and the red reflective side is facing the opposing traffic.*

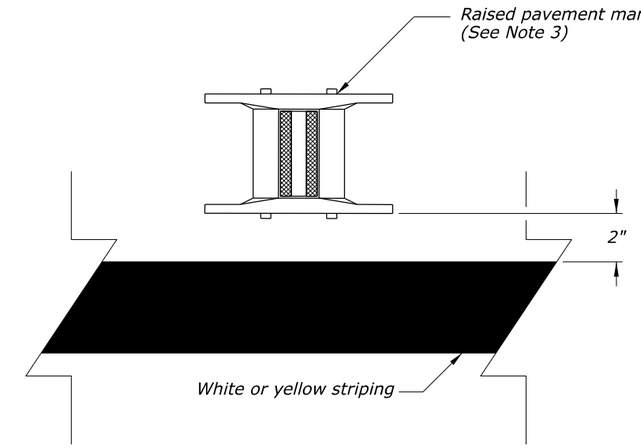


**DETAIL A**

NO SCALE

U.S. DEPARTMENT OF TRANSPORTATION, FHWA
OFFICE OF FEDERAL LANDS HIGHWAY

# PAVEMENT MARKINGS IN NEUTRAL AREAS WITH RAISED PAVEMENT MARKERS

| EFLHD DETAIL |
|---|
| E634-04 |
| SPECIFICATION |
| FP-24, FP-14 |
| APPROVED FOR USE |
| 06/2024 |

M:\PROJECTS\gwmp\11(4)\Proj_Dev\CADD\AMC Arch\Std-Det\E634-04.dgn [Sheet2_with_RPM]
21 May 2026 2:34 PM

| PROJECT | SHEET NUMBER |
|---|---|
| DC NP GWMP ARCH TAR 2026 | S13 |

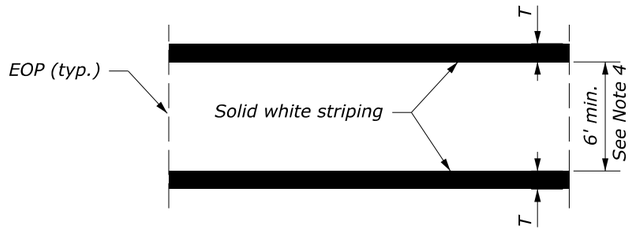


TRANSVERSE

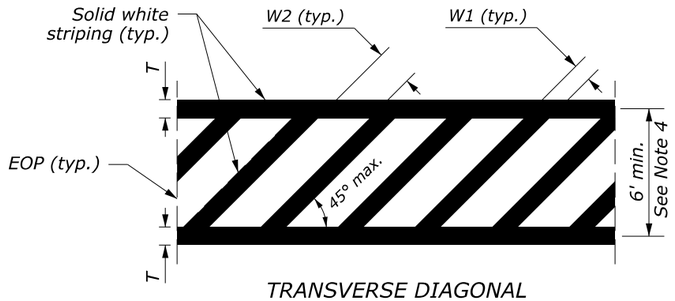


TRANSVERSE DIAGONAL
See Note 3

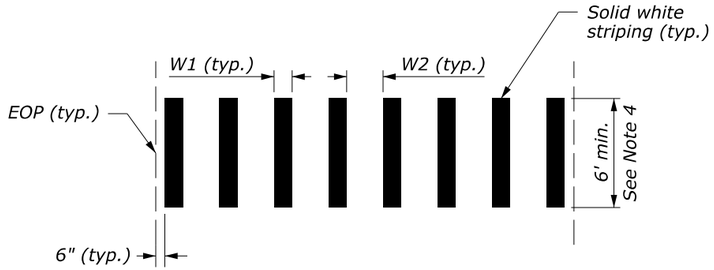


LONGITUDINAL BAR

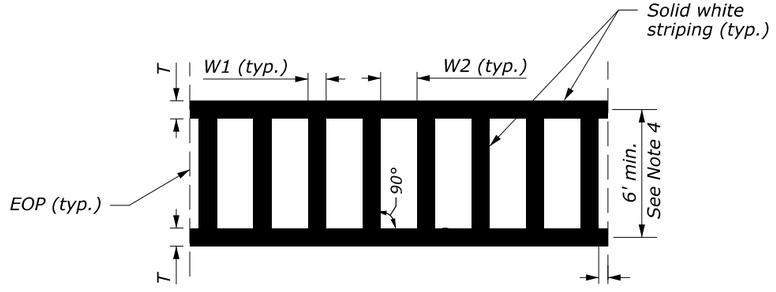


LADDER

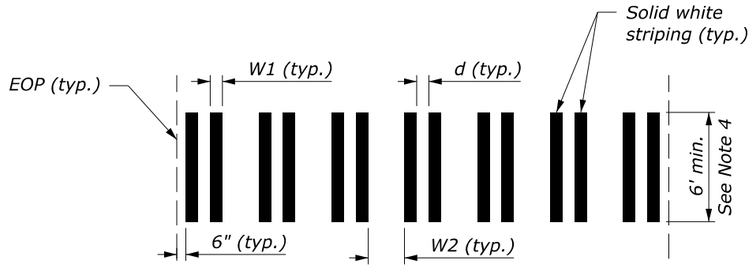


BAR PAIR

## TYPICAL CROSSWALK LAYOUTS

### NOTES:

1. Install striping and signing in accordance with the "Manual on Uniform Traffic Control Devices" (MUTCD), latest edition.
2. For longitudinal bar, bar pair, and ladder crosswalk layouts, space line bars to avoid wheel path as shown in the plans or as approved.
3. Use transverse diagonal crosswalk layout only at locations with complex roadway geometry where rotated interior longitudinal bars are needed to remain parallel to approaching traffic.
4. At non-intersection crosswalk where the posted speed limit is 40 MPH or greater, provide a minimum crosswalk width of 8 feet unless otherwise specified in the plans.

**CROSSWALK STRIPING DIMENSIONS TABLE**

| CROSSWALK TYPE | W1 | | W2* | | T | | d | |
|---|---|---|---|---|---|---|---|---|
| | Min. | Max. | Min. | Max. | Min. | Max. | Min. | Max. |
| Transverse | | | | | 6" | 24" | | |
| Longitudinal Bar | 12" | 24" | 12" | 60" | | | | |
| Longitudinal Bar Pair | 8" | 12" | 24" | 60" | | | 8" | 12" |
| Ladder | | 24" | | 24" | 6" | 24" | | |
| Transverse Diagonal | 12" | 24" | 12" | 60" | 6" | 24" | | |

NO SCALE

U.S. DEPARTMENT OF TRANSPORTATION, FHWA
OFFICE OF FEDERAL LANDS HIGHWAY

**PAVEMENT MARKINGS**
**PEDESTRIAN CROSSWALK**
SHEET 1 of 2

EFLHD DETAIL
E634-06A

SPECIFICATION
FP-24, FP-14

APPROVED FOR USE
06/2024

M:\PROJECTS\gwmp\11(4)\Proj_Dev\CADD\AMC Arch\Std-Det\E634-06.dgn [Sheet 1]
21 May 2026 2:34 PM

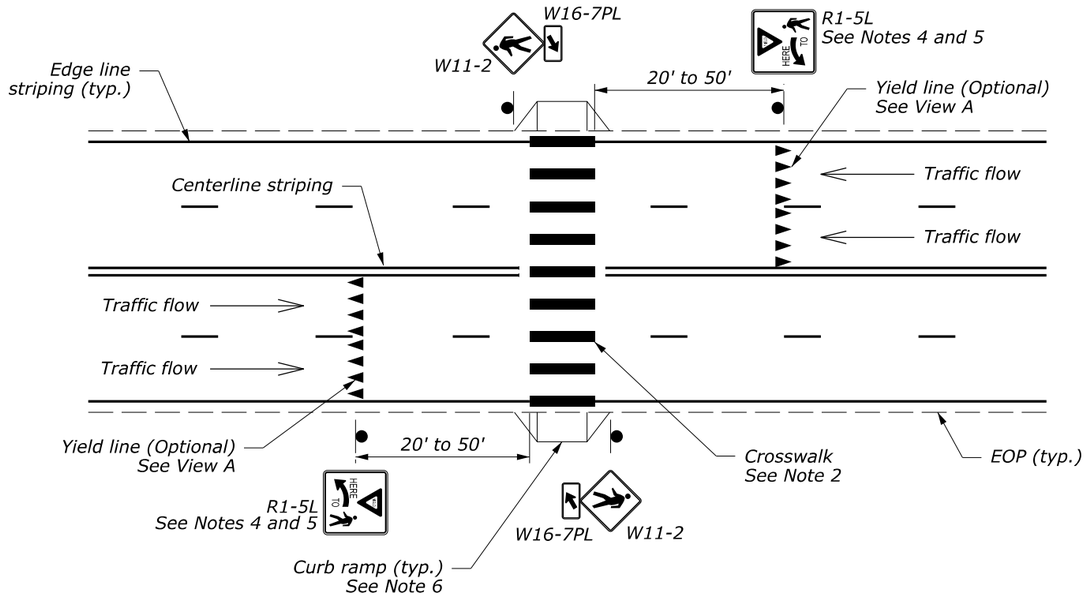


TWO-WAY ROADWAY

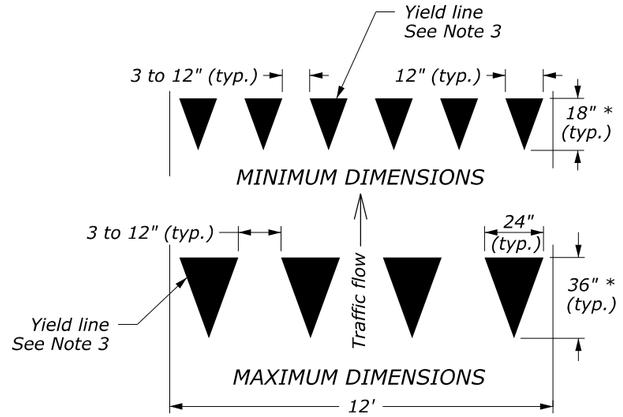


## VIEW A - YIELD LINE LAYOUTS

* Ensure triangle height for yield lines is equal to 1.5 times the base dimension.

## NOTES:

1. Install striping and signing in accordance with the "Manual on Uniform Traffic Control Devices" (MUTCD), latest edition.
2. Longitudinal bar crosswalk layout is used for illustration purposes only. Refer to the plans for project crosswalk layout and actual striping dimensions. See Sheet 1 of 2 for typical crosswalk layouts.
3. Smaller than shown yield lines may be used when installed on narrower, slow-speed facilities as approved.
4. If Stop Here for Pedestrians signs (R1-5b or R1-5c) are used instead of Yield Here to Pedestrians signs (R1-5 or R1-5a), use stop lines instead of yield lines.
5. The In-Street Pedestrian Crossing (R1-6 or R1-6a) sign may be used to remind road users of laws regulating right-of-way at an unsignalized pedestrian crosswalk according to the latest edition of the MUTCD as approved.
6. When curb ramps are present, ensure that crosswalk markings are located so that the curb ramps are within the extension of the crosswalk markings.

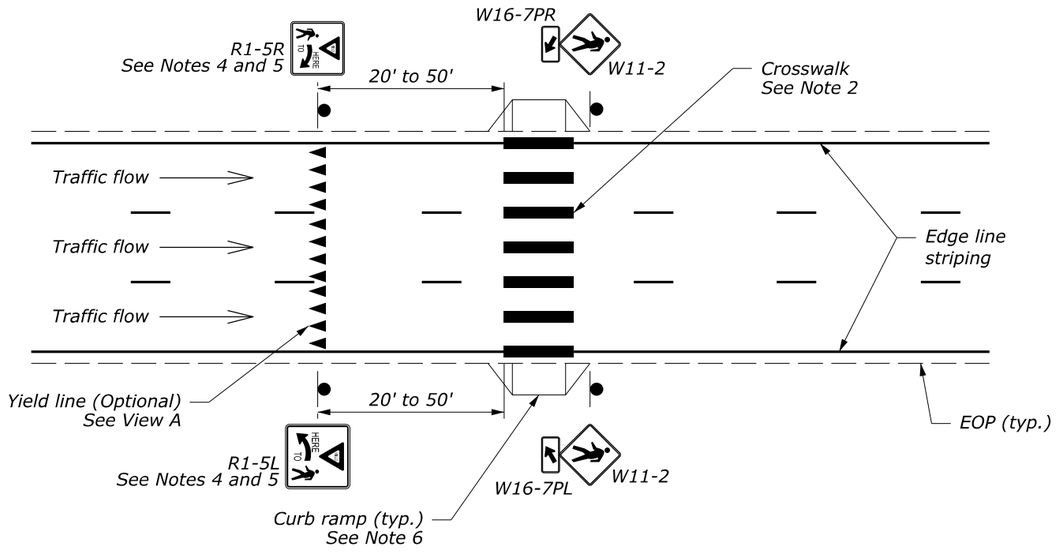


ONE-WAY ROADWAY

## HIGH-VISIBILITY CROSSWALK AT UNSIGNALIZED MIDBLOCK

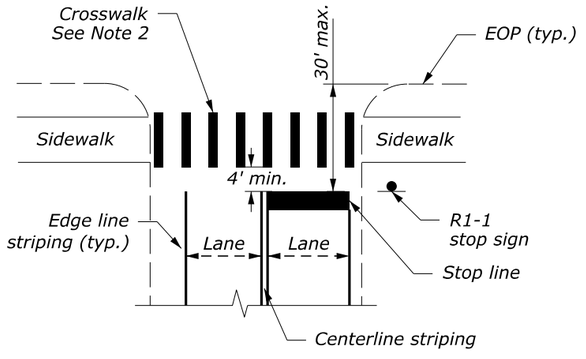


## STANDARD CROSSWALK AT INTERSECTION

NO SCALE

| U.S. DEPARTMENT OF TRANSPORTATION, FHWA OFFICE OF FEDERAL LANDS HIGHWAY | EFLHD DETAIL E634-06A |
|---|---|
| **PAVEMENT MARKINGS PEDESTRIAN CROSSWALK** SHEET 2 of 2 | SPECIFICATION FP-24, FP-14 |
| | APPROVED FOR USE 06/2024 |

M:\PROJECTS\gwmp\11(4)\Proj_Dev\CADD\AMC Arch\Std-Det\E634-06.dgn [Sheet 2]
21 May 2026 2:34 PM

| PROJECT | SHEET NUMBER |
|---|---|
| DC NP GWMP ARCH TAR 2026 | S15 |

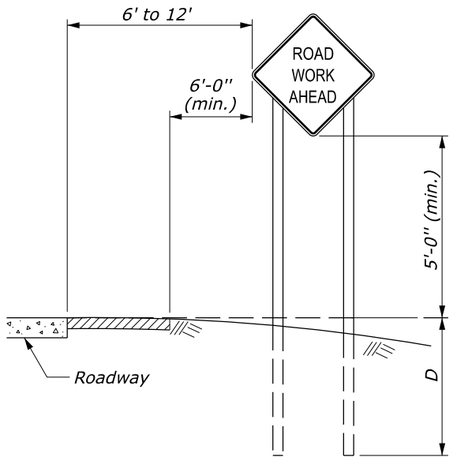


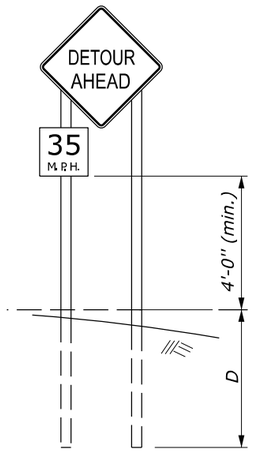


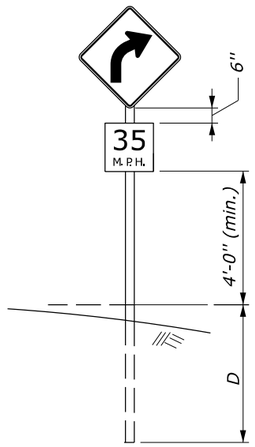


RURAL AREA

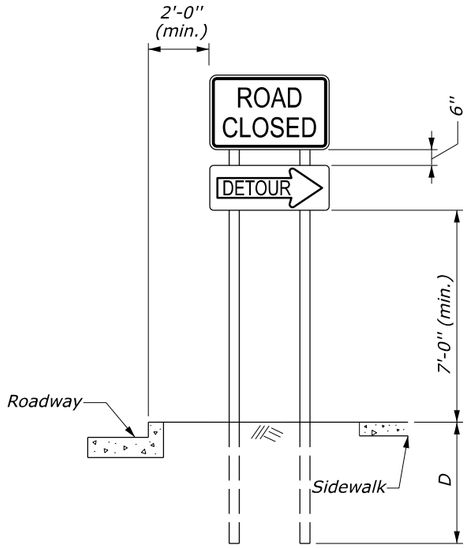


URBAN AREA

## FIXED ROADWAY SIGNS

*NOTES:*

1. *Mount signs that are wider than 3 feet or larger than 10 square feet on double posts.*
2. *All lumber dimensions are nominal.*
3. *Submit alternate details for portable signs. Ensure sign mounts hold the sign face in a vertical plane. Portable signs may be mounted lower than fixed signs when approved. Ensure all portable sign supports are crashworthy.*
4. *When parking is permitted within 200 feet of the sign, mount the sign a minimum of 7 feet above the pavement surface.*
5. *When approved by the CO and the Utility Company, utility poles may be used for sign mounting.*
6. *For 4- by 6-inch and greater posts, see the Breakaway Sign Support View. If breakaway design cannot be used due to post spacing, place the sign outside the clearzone or shield with a barrier. Do not place holes in posts of non-breakaway signs.*
7. *Signs requiring 6- by 6-inch and greater posts are considered non-breakaway if multiple posts are required and the posts cannot be spaced a minimum of 7 feet apart.*

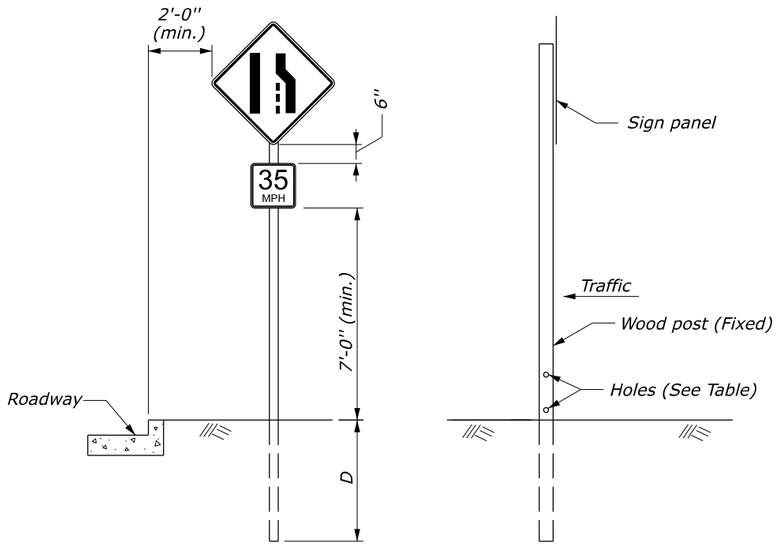


BREAKAWAY SIGN SUPPORT
(FIXED SIGNS 4" X 6" AND GREATER POSTS)
See Notes 6 and 7

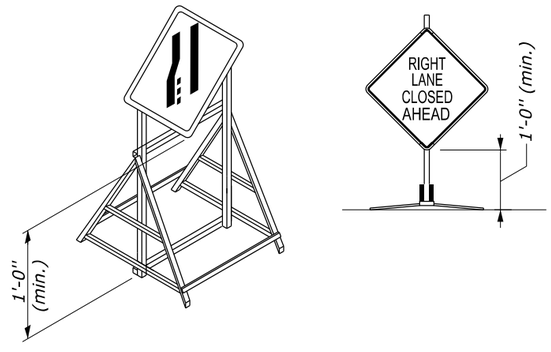


**PORTABLE SIGNS**
See Notes 3 and 4

| POST SIZE TABLE | | | | | | |
|---|---|---|---|---|---|---|
| POST SIZE | D | HOLE DIAMETER | MAXIMUM SIGN AREA (SQFT) | | | |
| | | | 1 Post | 2 Post | 3 Post | 4 Post |
| 4" x 4" | 4' | None Required | 10 | 20 | X | X |
| 4" x 6" | 4' | 1.5" | X | 35 | 50 | 70 |
| 6" x 6" | 5' | 2" | X | 50 | 75 | 100 |
| 6" x 8" | 5' | 3" | X | 85 | 125 | 165 |

NO SCALE

U.S. DEPARTMENT OF TRANSPORTATION, FHWA
OFFICE OF FEDERAL LANDS HIGHWAY

**TEMPORARY TRAFFIC CONTROL SIGN MOUNTING**

EFLHD DETAIL
E635-01

SPECIFICATION
FP-24, FP-14

APPROVED FOR USE
06/2024

M:\PROJECTS\gwmp\11(4)\Proj_Dev\CADD\AMC Arch\Std-Det\E635-01.dgn [Sheet]
21 May 2026 2:34 PM

# TYPICAL APPLICATION: ONE WAY, TWO LANE ROADWAY, CLOSING ONE LANE

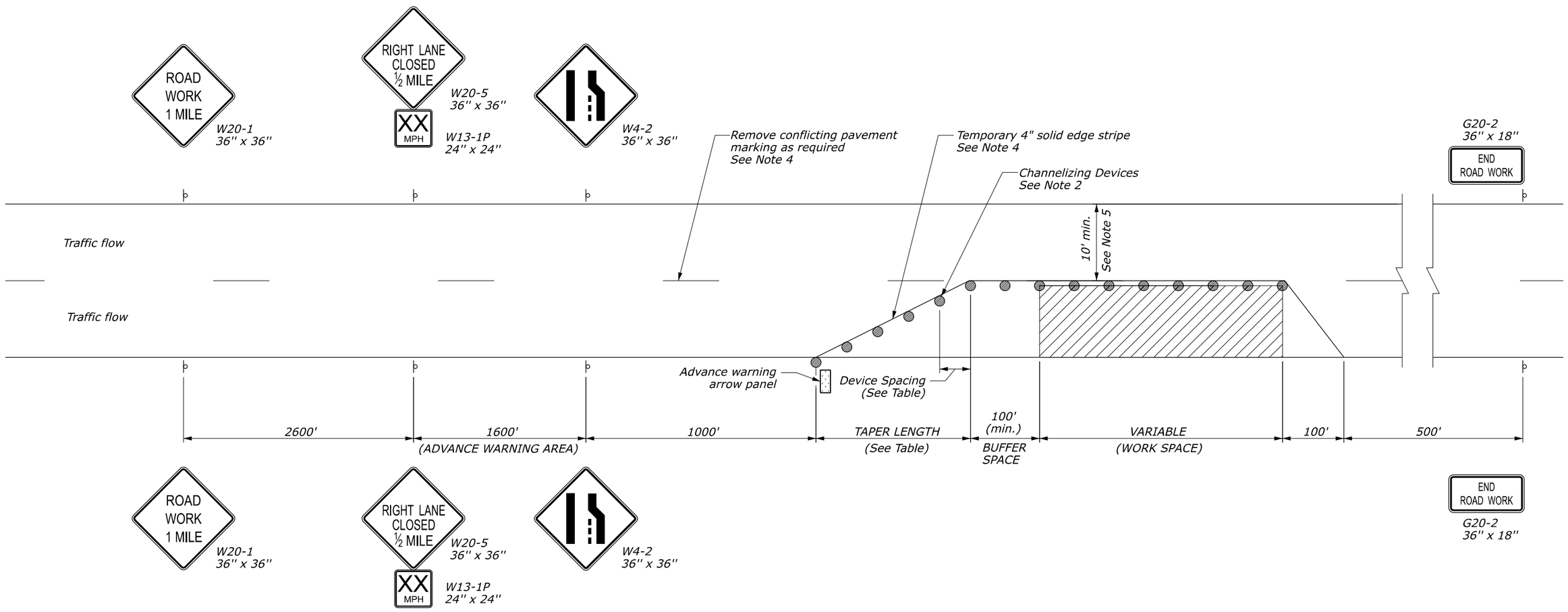


## NOTES:

1. Final location and spacing of temporary traffic control devices may be changed to fit field conditions as approved.
2. For operations that require a lane closure for a day or less, drums may be substituted with cones, type A in the work area as approved.
3. Right lane closure is shown. For left lane closure, substitute W20-5 and W4-2 left lane closure signs.
4. For long-term operations (operations where the lane is continuously closed for more than three days) remove conflicting pavement markings and place edge stripe as shown.
5. Use minimum width shown unless otherwise specified in Section 156.

## LENGTH AND SPACING TABLE

| APPROACH SPEED (MPH) | MINIMUM TAPER LENGTH (LNFT) LANE WIDTH (LNFT) | | | CHANNELIZING DEVICE SPACING (LNFT) | |
|---|---|---|---|---|---|
| | 10 | 11 | 12 | TAPER AREA | WORK AREA |
| 25 | 105 | 115 | 125 | 25 | 50 |
| 30 | 150 | 165 | 180 | 30 | 60 |
| 35 | 205 | 225 | 245 | 35 | 70 |
| 40 | 270 | 295 | 320 | 40 | 80 |
| 45 | 450 | 495 | 540 | 45 | 90 |
| 50 | 500 | 550 | 600 | 50 | 100 |
| 55 | 550 | 605 | 660 | 55 | 100 |

* Approach speed based on the regulatory posted speed, not the advisory speed.

NO SCALE

U.S. DEPARTMENT OF TRANSPORTATION, FHWA
OFFICE OF FEDERAL LANDS HIGHWAY

**TEMPORARY TRAFFIC CONTROL SINGLE LANE CLOSURE LAYOUT**

| EFLHD DETAIL | SPECIFICATION | APPROVED FOR USE |
|---|---|---|
| E635-05 | FP-24, FP-14 | 06/2024 |

M:\PROJECTS\gwmp\111(4)\Proj_Dev\CADD\AMC Arch\Std-Det\E635-05.dgn [Sheet]
21 May 2026 2:34 PM

| PROJECT | SHEET NUMBER |
|---|---|
| DC NP GWMP ARCH TAR 2026 | S17 |

*NOTES:*

1. *Mount all new steel traffic signal poles on a transformer. See Detail E636-D for transformer base details.*
2. *Use stainless steel strapping to affix hardware to poles, unless otherwise specified.*

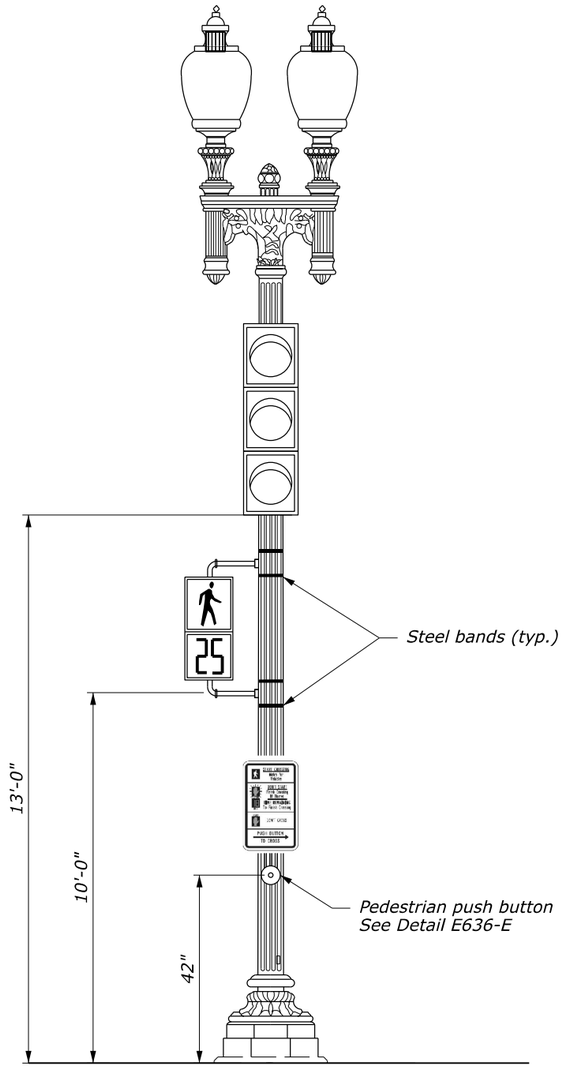


***TWIN 20 STYLE LIGHTING STANDARD WITH LED RETROFIT UPGRADE***

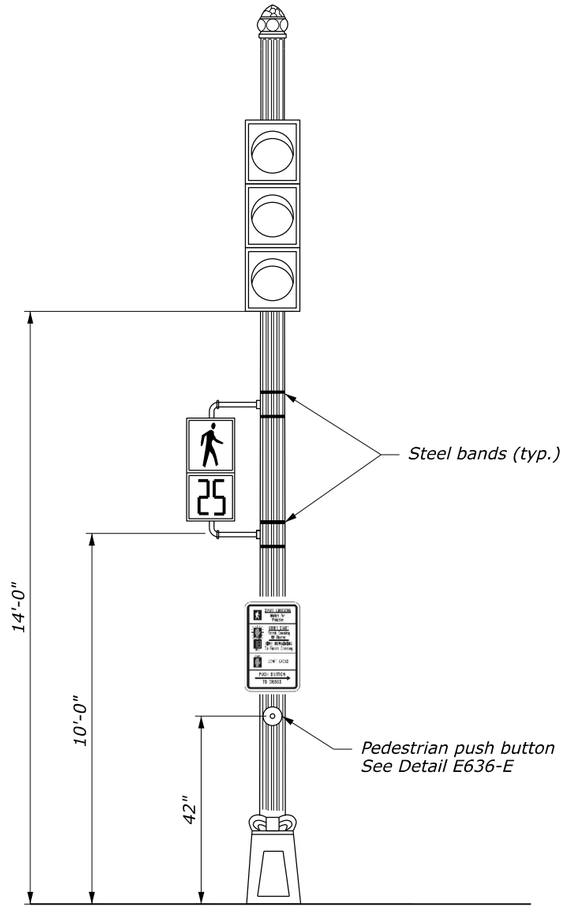


***20 FOOT TALL STEEL TRAFFIC SIGNAL POLE***

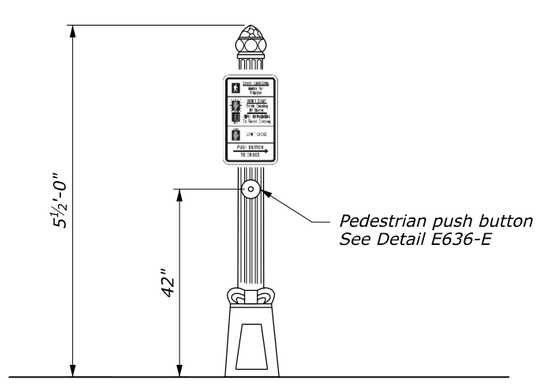


***STEEL PEDESTAL POLE***

*NO SCALE*

| U.S. DEPARTMENT OF TRANSPORTATION, FHWA<br>OFFICE OF FEDERAL LANDS HIGHWAY | EFLHD DETAIL<br>E636-A |
|---|---|
| **TRAFFIC SIGNAL HARDWARE ARRANGEMENT ON METAL POLES** | SPECIFICATION<br>FP-24 |
| | APPROVED FOR USE |

M:\PROJECTS\gwmp\11(4)\Proj_Dev\CADD\AMC Arch\Std-Det\S28-34-det E636_C.dgn [E636-A]
21 May 2026 2:38 PM

| PROJECT | SHEET NUMBER |
|---|---|
| DC NP GWMP ARCH TAR 2026 | S18 |

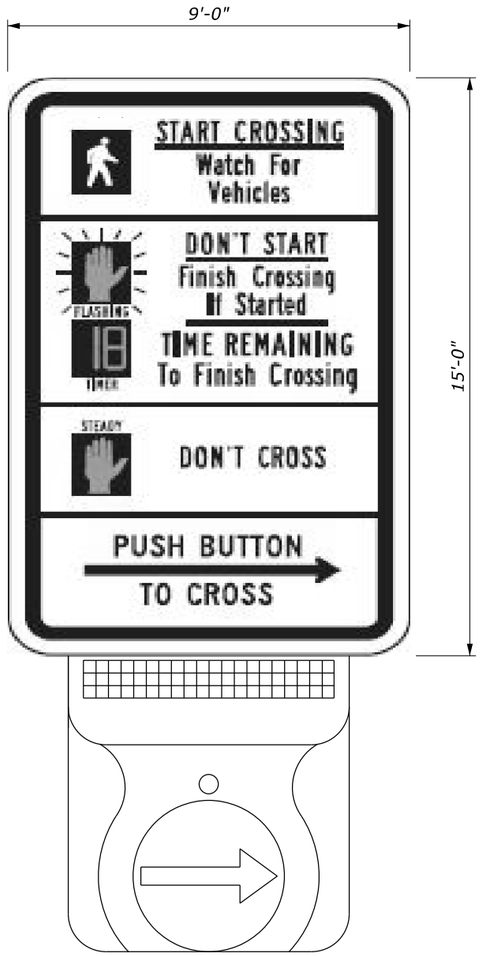


***FRONT VIEW***

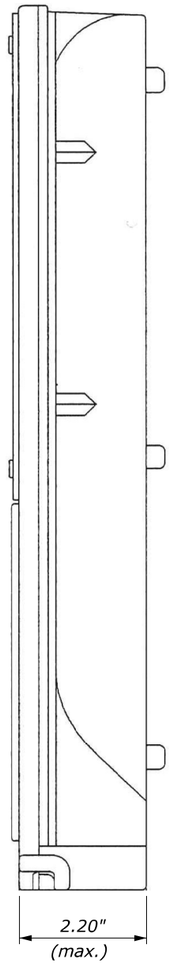


***SIDE VIEW***

*NO SCALE*

| U.S. DEPARTMENT OF TRANSPORTATION, FHWA<br>OFFICE OF FEDERAL LANDS HIGHWAY | EFLHD DETAIL<br>E636-B |
|---|---|
| **PEDESTRIAN PUSH BUTTON** | SPECIFICATION<br>FP-24 |
| | APPROVED FOR USE |

M:\PROJECTS\gwmp\11(4)\Proj_Dev\CADD\AMC Arch\Std-Det\S28-34-det E636_C.dgn [E636-B]
21 May 2026 2:38 PM

| PROJECT | SHEET NUMBER |
|---|---|
| DC NP GWMP ARCH TAR 2026 | S19 |

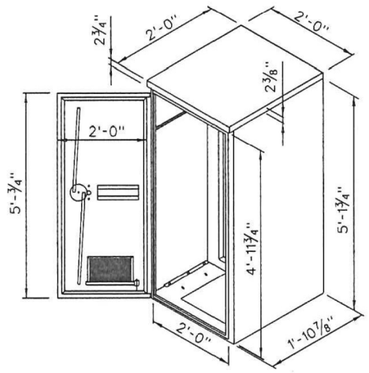


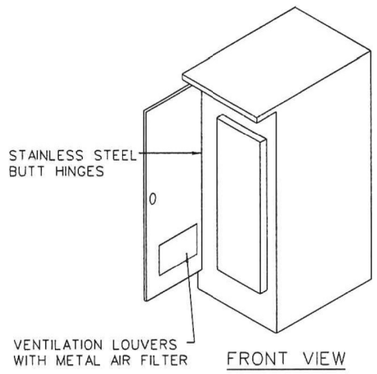


FRONT VIEW

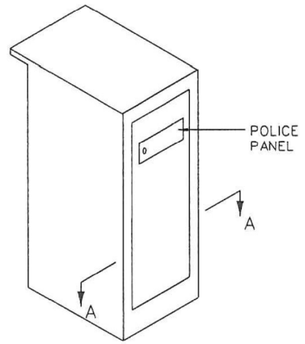


REAR VIEW

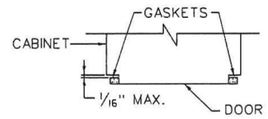


SECTION A-A

MODEL 336SS CONTROLLER CABINET

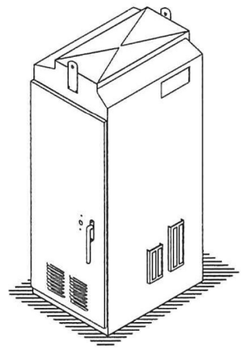

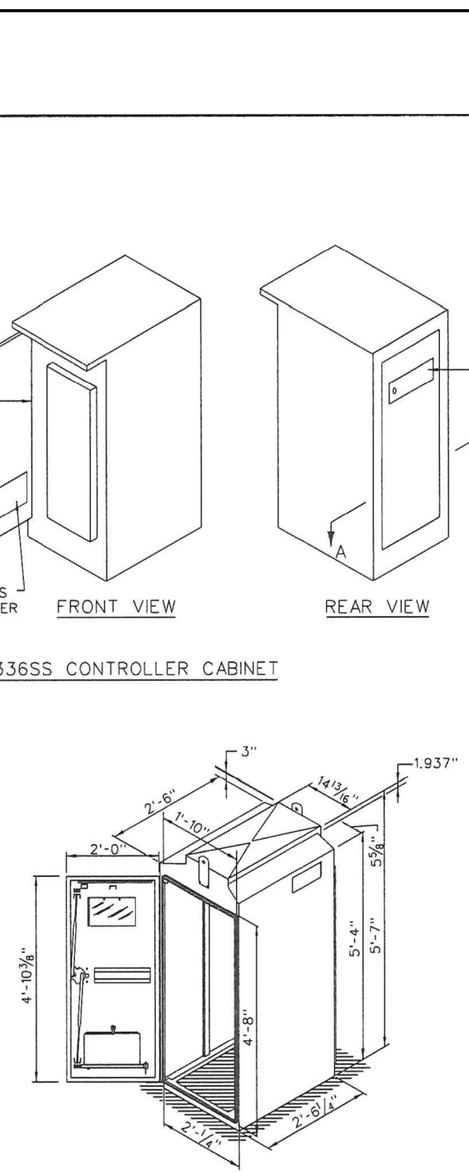


MODEL 332 CONTROLLER CABINET DETAILS

NOTE:

DO NOT PLACE CABINETS IN SIDEWALK.

*Adopted from District of Columbia Department of Transporation Standard Drawings, August 2015, DWG. NO. 613.10*

| ISSUED: 8/2015 | |
|---|---|
| REVISION | APPROVAL |
| | |
| | |
| | |
| | |
| | |

RECOMMENDED: _____ PROJECT MANAGER

APPROVED: Muhammed Khalid CHIEF ENGINEER

# TRAFFIC SIGNAL CONTROLLER CABINET DETAILS

d. DISTRICT OF COLUMBIA DEPARTMENT OF TRANSPORTATION

DWG. NO. 613.10

*NO SCALE*

U.S. DEPARTMENT OF TRANSPORTATION, FHWA
OFFICE OF FEDERAL LANDS HIGHWAY

**TRAFFIC SIGNAL CONTROLLER CABINET DETAILS**

EFLHD DETAIL E636-C

SPECIFICATION FP-24

APPROVED FOR USE

M:\PROJECTS\gwmp\11(4)\Proj_Dev\CADD\AMC Arch\Std-Det\S28-34-det E636_C.dgn [E636-C]
21 May 2026 2:38 PM

| PROJECT | SHEET NUMBER |
|---|---|
| DC NP GWMP ARCH TAR 2026 | S20 |

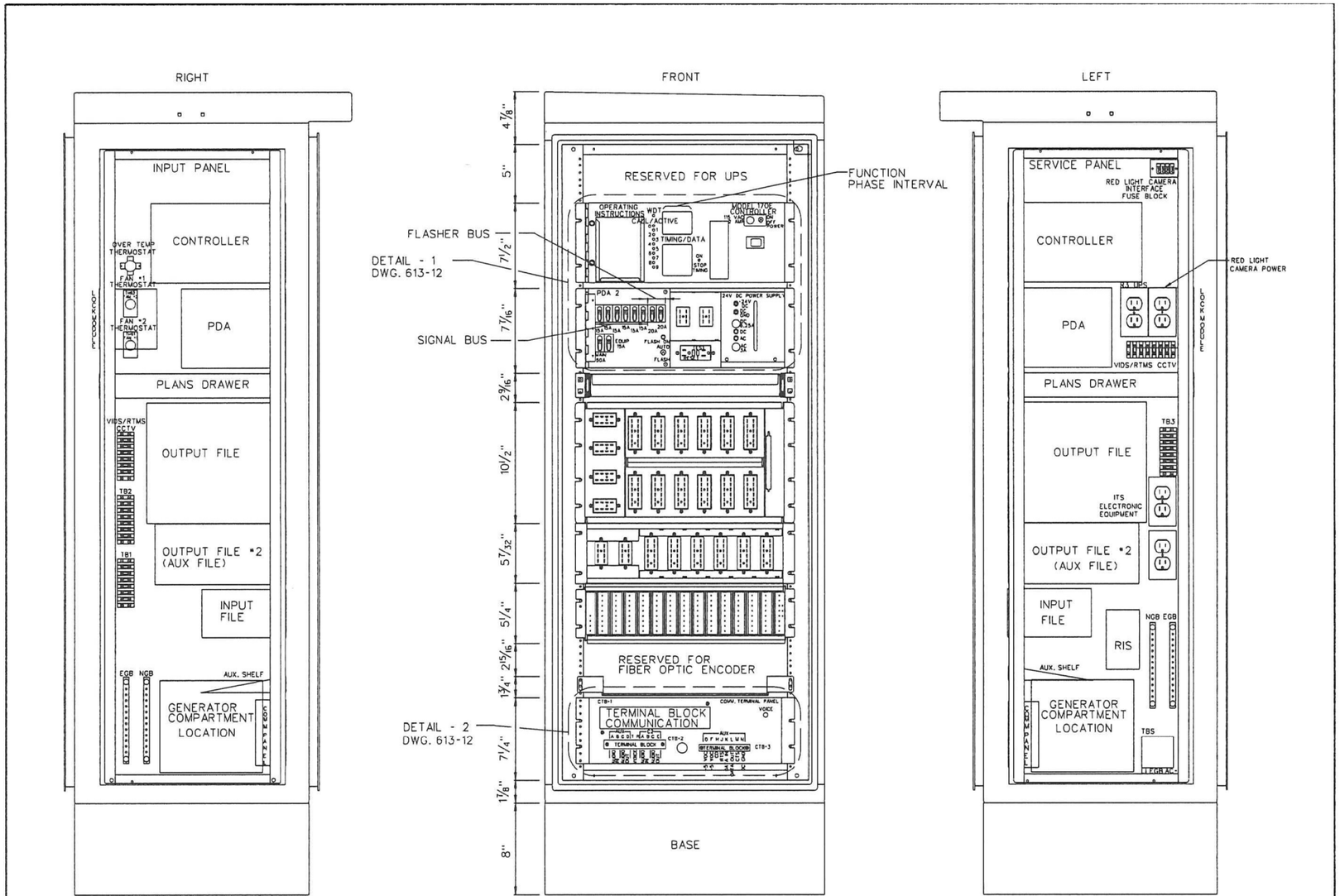


*Adopted from District of Columbia Department of Transporation Standard Drawings, August 2015, DWG. NO. 613.11*

| ISSUED: 8/2015 | |
|---|---|
| REVISION | APPROVAL |
| | |

RECOMMENDED: _____ PROJECT MANAGER

APPROVED: Muhammed Khalid CHIEF ENGINEER

# 336SS TRAFFIC SIGNAL CABINET FRONT, LEFT, AND RIGHT VIEWS

d. DISTRICT OF COLUMBIA DEPARTMENT OF TRANSPORTATION

DWG. NO. 613.11

*NO SCALE*

U.S. DEPARTMENT OF TRANSPORTATION, FHWA
OFFICE OF FEDERAL LANDS HIGHWAY

**336SS TRAFFIC SIGNAL CABINET FRONT, LEFT, AND RIGHT VIEWS**

| EFLHD DETAIL |
|---|
| E636-D |
| SPECIFICATION |
| FP-24 |
| APPROVED FOR USE |

M:\PROJECTS\gwmp\11(4)\Prof_Dev\CADD\AMC Arch\Std-Det\S28-34-det E636_C.dgn [E636-D]
21 May 2026 2:38 PM

| PROJECT | SHEET NUMBER |
|---|---|
| DC NP GWMP ARCH TAR 2026 | S21 |

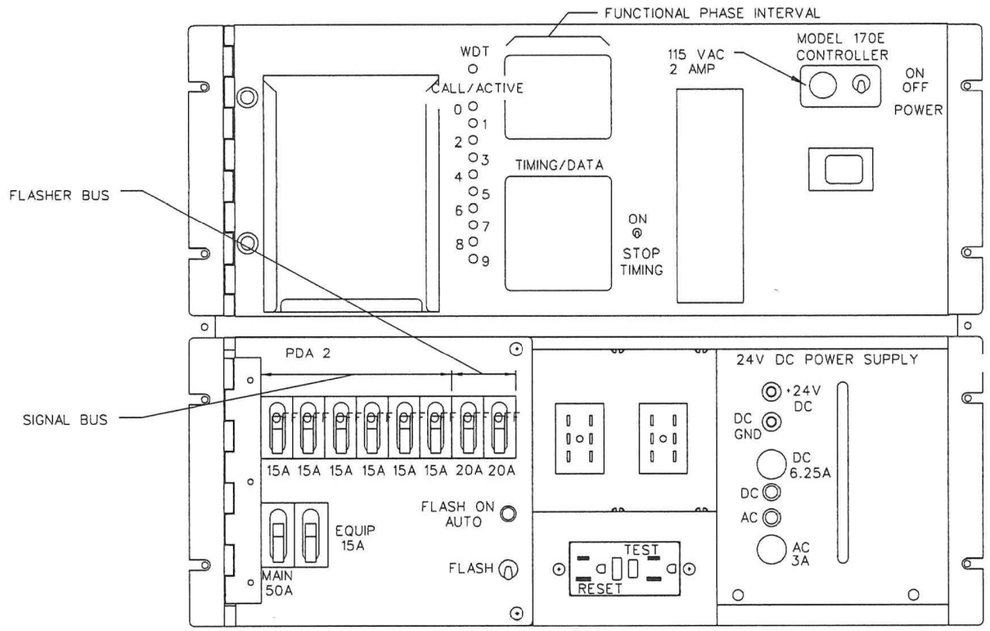


DETAIL - 1

DWG. 613.11

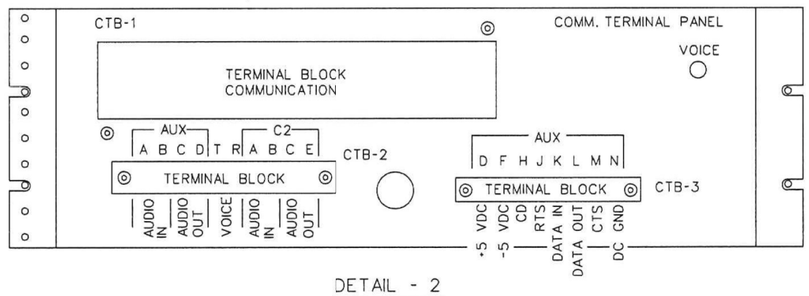


DETAIL - 2

DWG. 613.11

*Adopted from District of Columbia Department of Transporation Standard Drawings, August 2015, DWG. NO. 613.12*

| ISSUED: 8/2015 | |
|---|---|
| REVISION | APPROVAL |
| | |
| | |
| | |
| | |
| | |

RECOMMENDED: _____ PROJECT MANAGER

APPROVED: Muhammed Khalid CHIEF ENGINEER

# 336SS TRAFFIC SIGNAL CABINET DETAILS

DISTRICT OF COLUMBIA
DEPARTMENT OF TRANSPORTATION

DWG. NO. 613.12

*NO SCALE*

U.S. DEPARTMENT OF TRANSPORTATION, FHWA
OFFICE OF FEDERAL LANDS HIGHWAY

**336SS TRAFFIC SIGNAL CABINET DETAILS**

| EFLHD DETAIL |
|---|
| E636-E |
| SPECIFICATION FP-24 |
| APPROVED FOR USE |

M:\PROJECTS\gwmp\11(4)\Proj_Dev\CADD\AMC Arch\Std-Det\S28-34-det E636_C.dgn [E636-E]
21 May 2026 2:38 PM

| PROJECT | SHEET NUMBER |
|---|---|
| DC NP GWMP ARCH TAR 2026 | S22 |

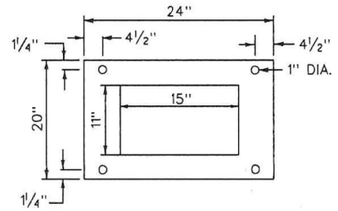


TOP VIEW

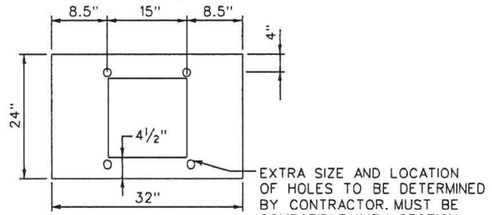


EXTRA SIZE AND LOCATION OF HOLES TO BE DETERMINED BY CONTRACTOR. MUST BE COMPATIBLE WITH SECTION D-D, DWG. NO. 613.11.

TOP VIEW

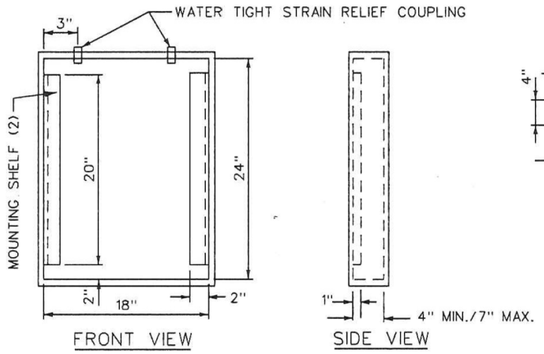


FRONT VIEW




SIDE VIEW

AERIAL TERMINATION CABINET

NOTES:

1. CABINET TYPE 3R ELECTRICAL ENCLOSURE.
2. THE SIZE OF THE WATER TIGHT STRAIN RELIEF COUPLINGS WILL BE SPECIFIED BY THE ENGINEER.
3. THE DOOR SHALL BE HINGED, AND LATCHED.
4. REAR OF THE CABINET SHALL HAVE TWO (2) WOOD POLE MOUNTING BRACKETS TO BE USED WITH METAL STRAPPING.
5. THE CABINET SHALL BE MADE OF ALUMINUM SHEET WITH A MIN. OF 0.125" THICKNESS.

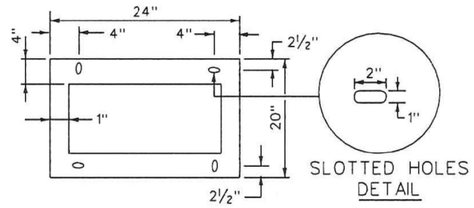


SLOTTED HOLES DETAIL

BOTTOM VIEW

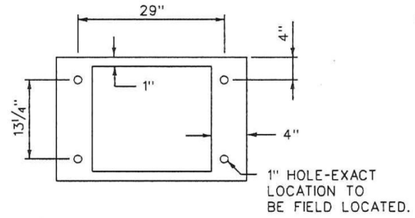


1" HOLE-EXACT LOCATION TO BE FIELD LOCATED.

BOTTOM VIEW

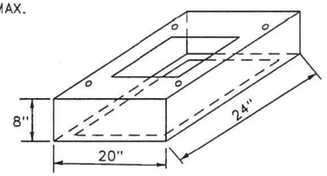


ADAPTOR BASE NO. 1

USE WITH STANDARD 336SS FOUNDATIONS

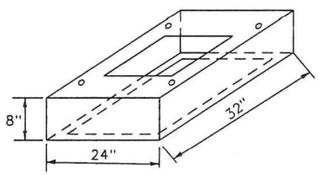


ADAPTOR BASE NO. 2

USE WITH FOUNDATIONS FOR 332 AND 336SS CABINETS ON EXISTING TYPE N FOUNDATIONS

CONTROLLER AND TERMINATION CABINET ADAPTOR BASES

NOTES:

1. WHEN ADAPTOR BASE NO. 2 IS USED FOR A TYPE 332 CABINET, NEW HOLES MUST BE DRILLED IN THE TOP PLATE. THE HOLES SHALL BE 29" APART ON THE LONG SIDE AND 13¼" APART ON THE SHORT SIDE (29"x13¼").
2. TYPE N FOUNDATIONS WILL NOT BE CONSTRUCTED.

*Adopted from District of Columbia Department of Transporation Standard Drawings, August 2015, DWG. NO. 613.13*

| ISSUED: 8/2015 | |
|---|---|
| REVISION | APPROVAL |
| | |
| | |
| | |
| | |
| | |

RECOMMENDED: _____ PROJECT MANAGER

APPROVED: Muhammed Khalid CHIEF ENGINEER

TRAFFIC SIGNAL AERIAL TERMINATION CABINETS AND CONTROLLER CABINET ADAPTER BASES

d. DISTRICT OF COLUMBIA DEPARTMENT OF TRANSPORTATION

DWG. NO. 613.13

*NO SCALE*

U.S. DEPARTMENT OF TRANSPORTATION, FHWA
OFFICE OF FEDERAL LANDS HIGHWAY

**TRAFFIC SIGNAL AERIAL TERMINATION CABINETS AND CONTROLLER CABINET ADAPTER BASES**

| EFLHD DETAIL |
|---|
| E636-F |
| SPECIFICATION |
| FP-24 |
| APPROVED FOR USE |

M:\PROJECTS\gwmp\11(4)\Proj_Dev\CADD\AMC Arch\Std-Det\S28-34-det E636_C.dgn [E636-F]
21 May 2026 2:38 PM

| PROJECT | SHEET NUMBER |
|---|---|
| DC NP GWMP ARCH TAR 2026 | S23 |

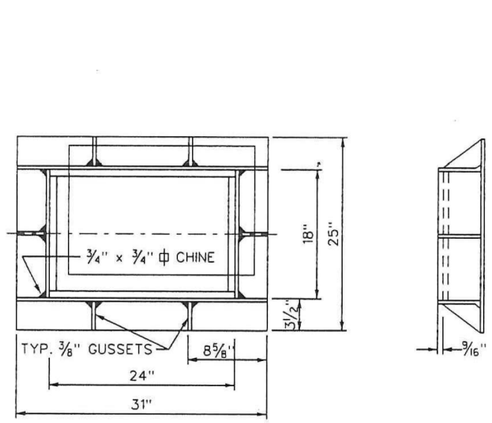


FRAME AND COVER

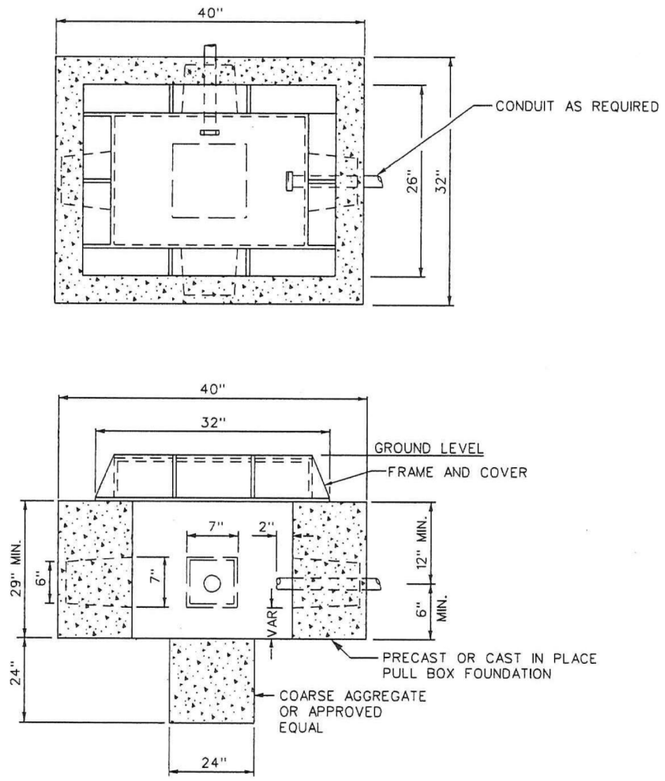


PULL BOX INSTALLATION

NOTES:

1. PULL BOX AND HANDBOX CONCRETE TO SATISFY D.C. SPECIFICATION 803.01 (3500 PSI).
2. SEE DWG. NO. 613.14 : GROUND ROD MAY BE REQUIRED IF MAST ARM POLE FOUNDATION IS CONNECTED TO THE PULL BOX.

*Adopted from District of Columbia Department of Transporation Standard Drawings, August 2015, DWG. NO. 613.20*

| ISSUED: 8/2015 | RECOMMENDED: PROJECT MANAGER |
|---|---|
| REVISION / APPROVAL | APPROVED: Muhammed Khalid, CHIEF ENGINEER |

# TRAFFIC SIGNAL DISTRICT PULL BOX DETAILS

d. DISTRICT OF COLUMBIA DEPARTMENT OF TRANSPORTATION

DWG. NO. 613.20

*NO SCALE*

U.S. DEPARTMENT OF TRANSPORTATION, FHWA
OFFICE OF FEDERAL LANDS HIGHWAY

**TRAFFIC SIGNAL DISTRICT PULL BOX DETAILS**

| EFLHD DETAIL | E636-G |
|---|---|
| SPECIFICATION | FP-24 |
| APPROVED FOR USE | |

M:\PROJECTS\gwmp\11(4)\Proj_Dev\CADD\AMC Arch\Std-Det\S23-34-det E636_C.dgn [E636-G]
21 May 2026 2:38 PM

# Triumphal Arch Project

# Public Comment Summary Report

A public comment period for the proposed Triumphal Arch project was conducted from June 5, 2026, to June 15, 2026, in accordance with the National Historic Preservation Act (NHPA) Section 106 regulations. As part of this process, the National Park Service (NPS) initiated consultation, provided public access to project materials, and accepted written comments submitted through the Planning, Environment, and Public Comment (PEPC) system and other channels. This public comment period allowed consulting parties, organizations, and members of the public to review the Assessment of Effects and draft Programmatic Agreement and offer feedback on potential impacts to historic properties, consistent with the requirements of 36 CFR Part 800. The NPS received a total of 100,936 comments during this period.

To develop this report, the NPS downloaded the public comments from PEPC and other channels and used artificial intelligence (AI) tools to organize the comments by subject matter themes. NPS staff with expertise in the subjects involved developed and tested tailored prompts to ensure the AI outputs accurately reflected the full range of issues raised by commentors. Using these AI-generated digests as a foundation, NPS subject-matter experts reviewed the comments, synthesized them into broader themes, and prepared this comment report.

## Cultural Resources

### Lincoln Memorial

#### *Adverse Effects*

Some commenters asserted that the proposed arch would block, disrupt, or destroy the intentional historic sightline connecting the Lincoln Memorial, Arlington Memorial Bridge, Arlington National Cemetery, and Arlington House, thereby undermining the nationally significant symbolic corridor representing unity and reconciliation. Some commenters asserted that the arch would permanently alter or destroy the intended symbolic alignment and relationship between the Lincoln Memorial and Arlington House, the impacts of which would be irreversible and impossible to mitigate.

Some commenters asserted that the height of the arch would exceed the Lincoln Memorial by more than double and would be visually incompatible with the surrounding skyline. Some commenters asserted that the arch would visually dominate, dwarf, overshadow, or visually compete with the Lincoln Memorial due to its height and massing, overwhelming the memorial's visual prominence, historic setting, and restrained dignity.

Some commenters asserted that construction activities would disrupt the visitor experience at the Lincoln Memorial and sever important symbolic and visual connections within the landscape.

Some commenters asserted that the project would intrude upon and degrade the contemplative, intentionally designed civic landscape, replacing quiet dignity with spectacle and compromising the integrity of setting, feeling, and association.

Some commenters asserted that the design resembles European triumphal arches, imperial, or authoritarian monuments and is not rooted in American traditions, diminishing the symbolism and integrity of the Lincoln Memorial and its surrounding landscape.

### *Proposed Alternatives or Mitigations related to the Lincoln Memorial*

Some commenters asserted that alternatives preserving existing open views, including the symbolic axis between the Lincoln Memorial and Arlington House, should be prioritized.

Some commenters asserted that the National Park Service's adverse effect finding underscores the severity of impacts and that proposed mitigation measures are insufficient to address those adverse effects to these resources.

Some commenters asserted that the proposed arch should be relocated, scaled down, or redesigned to avoid excessive height, visual intrusiveness, or gold ornamentation. Some commenters asserted that any structure should not exceed the height of the Lincoln Memorial, with some recommending strict limits such as a maximum height of approximately ten feet.

## Arlington National Cemetery

### *Adverse Effects*

Some commenters asserted that the proposed arch is disrespectful to Arlington National Cemetery, with some describing it as desecrating sacred ground, trivializing or commercializing a solemn burial landscape, or constituting a symbolic affront to veterans and their families.

Some commenters asserted that the arch would block, diminish, or permanently disrupt the deliberate symbolic sightline connecting Arlington National Cemetery, the Lincoln Memorial, Arlington Memorial Bridge, and Arlington House—an alignment representing national unity, remembrance, and reconciliation. Some families with loved ones buried in Arlington National Cemetery expressed grief and distress over the potential loss of the sightlines that hold personal and symbolic meaning.

Some commenters, including veterans and military families, expressed emotional harm, personal offense, and deep concern that the project would dishonor the memory of the more than 400,000 service members interred at Arlington National Cemetery. Some commenters noted that views of the President John F. Kennedy Gravesite and eternal flame may be compromised from the bridge and ceremonial approach; the solemn approach is central to visitor experience.

Some commenters asserted that the arch would visually overshadow graves, funeral processions, and the contemplative setting of Arlington National Cemetery, with up to 30 funerals per day could be adversely affected. Some commenters asserted that the increase in traffic from the arch would disrupt funeral processions.

Some commenters asserted that construction associated with the arch, including noise, would disrupt cemetery operations, diminish tranquility and solemnity, create safety and traffic concerns, and contribute to fears of politicization of a sacred landscape.

Some commenters asserted that the triumphal motifs associated with the arch could be perceived as glorifying war rather than honoring duty, sacrifice, and military service, the values embodied at Arlington National Cemetery.

Some veterans' organizations and individual servicemembers expressed a lack of support for the project, emphasizing that Arlington National Cemetery should remain a place of humility and reflection rather than spectacle.

#### *Beneficial Effects*

Some commenters described the arch as an appropriate tribute near Arlington National Cemetery.

#### *Proposed Alternatives or Mitigations Related to Arlington National Cemetery*

Some commenters asserted that the arch should be relocated to an alternative site away from Arlington National Cemetery to avoid interference with funeral operations, visitor experience, and the respectful character of the cemetery landscape.

Some commenters asserted that funds should be redirected toward cemetery maintenance, veteran services, healthcare, improvements to existing memorials, or enhancing interpretation at existing memorials to celebrate the 250th, rather than constructing a new monument near Arlington National Cemetery.

Some commenters asserted that any action must protect the symbolic sightline connecting Arlington National Cemetery, Arlington House, Arlington Memorial Bridge, and the Lincoln Memorial, emphasizing that no structure should interfere with this historic visual axis.

Some commenters asserted that smaller, discreet, or landscape-based commemorations, such as gardens, fountains, walls, benches, reflective spaces, or plantings, would be more appropriate near Arlington National Cemetery and would preserve the solemnity of the setting.

One commenter proposed a very small veterans memorial arch as a less intrusive commemorative option.

### Arlington House

#### *Adverse Effects*

Some commenters asserted that the proposed arch would block, disrupt, or ruin the intentional historic sightline between the Lincoln Memorial and Arlington House, a symbolic post–Civil War reconciliation axis designed to represent national unity. Some commenters asserted that historical documentation emphasizes the intentionality of the axis, designed to help heal the wounds of the Civil War, and that the arch would completely obstruct this critical view.

Some commenters asserted that the scale and placement of the arch would visually overwhelm Arlington House, describing it as out of scale, incongruent, dwarfing, overwhelming, incompatible with, or sacrilegious in relation to the historic property. Conversely, some commenters expressed concern that the arch would create an inappropriate visual emphasis on Arlington House, effectively framing the former home of Confederate General Robert E. Lee in a way they viewed as insensitive or historically inappropriate.

#### *Proposed Alternatives or Mitigations Related to Arlington House*

Some commenters asserted that smaller-scale alternatives or alternate locations should be considered to avoid adverse effects to the Arlington House viewshed.

Some commenters asserted that alternative design concepts should focus on framing the historic view without blocking it.

### George Washington Memorial Parkway and Memorial Circle

#### *Adverse Effects*

Some commenters asserted that the proposed arch would irreparably damage the historic and symbolic landscape of Memorial Circle and the George Washington Memorial Parkway, asserting that inserting a massive vertical structure into an intentionally horizontal vista would erase the area's established character. One commenter stated that the National Register nomination identifies the protected historic property as the constructed Memorial Bridge composition, including the low neoclassical bridge, Columbia Plaza's circular lawn, the four 35-foot pylons, Memorial Avenue, Boundary Channel Bridge, and associated landscape and circulation features, and expressed concern that introducing a significantly larger and fundamentally different commemorative structure would compromise the design integrity, setting, feeling, and association of this nationally significant cultural landscape.

Some commenters asserted that the project would worsen traffic congestion within Memorial Circle, create pedestrian and vehicle hazards on the George Washington Memorial Parkway, block key sightlines, disrupt ceremonial routes, and result in extended construction impacts, with some describing scenarios such as long work hours and years of disruption to surrounding communities and park users.

Some commenters asserted that the arch is alien, oversized, inconsistent with the McMillan Plan, visually jarring, and hazardous within a high-speed traffic circle central to circulation along the Parkway, and that the proposal includes insufficient planning for increased visitation to Memorial Circle, inadequate pedestrian-safety measures, and insufficient parking and circulation capacity along the Parkway.

One commenter stated that the project does not fit within the landscape of Lady Bird Johnson Park, which provides the broader landscape setting that frames and supports Memorial Circle along the Parkway corridor.

One commentor asserted that NPS had inadequately considered *The Secretary of the Interior's Standards for Restoration* standards, including standard number ten: "Designs that were never executed historically will not be constructed."

### *Beneficial Effects*

Some commenters supported the idea of enhancing Memorial Circle, with a few noting that the area "needed something," and some expressing enthusiasm about decorative elements associated with the proposed arch.

### *Proposed Alternatives or Mitigations Related to George Washington Memorial Parkway and Memorial Circle*

Some commenters asserted that improvements to existing infrastructure on the Parkway and Memorial Circle should be prioritized instead of constructing a large new monument.

Some commenters asserted that smaller commemorative features or landscape-based enhancements and context-sensitive design alternatives would be more appropriate for the historic setting of Memorial Circle and the Parkway.

## National Mall

### *Adverse Effects*

Some commenters asserted that the proposed arch is incompatible with the character of the National Mall, conflicting with its symbolic purpose, open vistas, longstanding neoclassical design vocabulary, historic viewsheds, axial relationships, and commemorative purpose. The arch was described by some as "ruining the Mall," "out of place," "un-American" because it imitates European triumphal monuments, "visually at odds," or "not reflective of American values." Commenters asserted that its visual and symbolic character would disrupt the Mall's cohesive historic setting and diminish the solemn and democratic character associated with the National Mall.

Some commenters asserted that the existing monuments on the National Mall should be preserved and maintained rather than overshadowed or visually competed with by a new structure.

### *Beneficial Effects*

Some commenters asserted that the arch could contribute to the national 250th anniversary or might "add something new" to the National Mall.

### *Proposed Alternatives or Mitigations Related to the National Mall*

Some commenters asserted that smaller commemorations, temporary installations, or designs more appropriate to the American character of the National Mall should be considered.

Some commenters suggested that any new monument should be sited away from the Mall or designed to complement the Mall's existing commemorative landscape.

## National Historic Landmarks

### *Adverse Effects*

Some commenters asserted that NPS has not minimized impacts to National Historic Landmarks (NHLs) as required under Section 110(f) of the National Historic Preservation Act, noting that both the Fort Myer Historic District and Fort Myer Quarters 1 are NHLs. Commenters further observed that other NHLs in the broader APE received no-adverse-effect findings. One commenter requested that NPS provide the visual and methodological basis for its findings regarding impacts to NHLs and revisit those findings if the final design, height, lighting, or silhouette changes. Some commentors also asserted that NPS failed to analyze potential effects on the Old Naval Observatory NHL and incorrectly conflated the Quarters 1NHL, and the Fort Myer NHLD.

## Historic Bridges

### *Adverse Effects*

Some commenters asserted that the proposed arch would harm historic bridges, particularly Arlington Memorial Bridge, by introducing safety risks, construction vibration, and the potential for physical damage to historic stonework and structural elements.

Some commenters asserted that construction associated with the arch could result in the loss of mature trees and landscape features that contribute to the historic context of Memorial Bridge and its approaches.

Some commenters asserted that the arch would violate principles of the McMillan Plan, which intentionally rejected massive entrance columns to preserve the horizontal skyline and the architectural harmony of the bridge and its surrounding cultural landscape.

Some commenters asserted that the sightlines connecting Arlington Memorial Bridge with the Lincoln Memorial, Arlington House, and other components of the monumental core are irreplaceable, and that the arch would destroy the historic setting, feeling, and association that these bridges were designed to support.

## Other Historic Properties

Some commentors asserted that NPS omitted assessment of the proposed undertaking's effects on other NRHP-listed or eligible historic properties and their contributing features and views. Historic properties that commentors asserted the NPS omitted include the L'Enfant Plan of the City of Washington, DC; Observatory Hill Historic District; and Old Naval Observatory NHL.

## Views and Viewsheds - Generally

### *Adverse Effects*

Some commenters asserted that the project would alter the skyline and diminish nationally significant symbolic relationships, including the visual expression of unity represented by uninterrupted cross-Potomac sightlines.

Some commenters asserted that any nighttime obstruction lighting that may be required to ensure aviation safety would further affect views within and around the National Mall and the Arlington corridor.

### *Beneficial Effects*

Some commenters asserted that a celebratory arch might enhance arrival or departure experiences and a sense of commemoration to the viewshed.

### *Proposed Alternatives or Mitigations Related to Views and Viewsheds*

Some commenters asserted that smaller or low-profile designs, alternative locations, or preserving existing viewsheds should be considered in order to avoid permanent visual obstruction.

## Cultural Landscapes - Generally

### *Adverse Effects*

Some commenters asserted that the proposed arch was incompatible with the character of nationally significant cultural landscapes, conflicting with their commemorative purpose, the principles of the McMillan Plan, and the National Park Service's stewardship responsibilities.

Some commenters asserted that the project would permanently alter major cultural landscapes, including the Potomac Basin and the Memorial Avenue Corridor, by disrupting designed views, spatial relationships, and the historic landscape composition. Some commenters asserted that no form of mitigation could restore a blocked view or replace the cultural-landscape associations that would be lost if the arch were constructed.

Commentors cited the *Secretary of the Interior's Standards for the Treatment of Cultural Landscapes (Spatial Organization & Land Patterns)*, which they asserted recommends that landscapes should "retain and preserve existing spatial organization."

Some commenters asserted that the arch would result in a loss of symbolic unity, spatial organization, and architectural coherence across all the landscapes in the area, fundamentally changing how the cultural landscapes are experienced.

### *Proposed Alternatives or Mitigations Related to Cultural Landscapes*

Some commenters asserted that context-sensitive commemorations or landscape-focused designs, such as ecological restoration or small-scale improvements, would better align with the character of the existing cultural landscapes.

Some commenters asserted that improving public transit or making circulation-related upgrades would address visitor needs while avoiding further disruption to the cultural landscape.

Commentors suggest that proposals be considered to enhance and interpret the existing landscape rather than introduce a new, dominating structure.

### Archeology

Some commenters recommended conducting archaeological studies where relevant.

## Visitor Experience, Access, and Safety Concerns

### Visitor Experience

#### *Adverse Effects*

Some commenters asserted that the structure would compete with or overshadow existing memorials, shifting focus away from established sites and reorganizing the visitor experience around the arch rather than the broader national story.

Some commenters asserted that the project would commercialize or trivialize sacred or historically significant spaces, creating confusion of meaning and diminishing the intent of reflective areas; disrupt access, obstruct views, increase congestion, and negatively affect visitor enjoyment; and increase the risk of vandalism, posing potential threats to surrounding memorials and diminishing the solemn and respectful nature of the area

Some commenters asserted that inadequate parking, limited safe access, and increased traffic and noise would degrade the visitor experience.

One commenter stated that the area near the Arlington National Cemetery entrance and the adjacent Metro station is a popular location for viewing ceremonial flyovers, and that constructing the Arch would largely eliminate this longstanding public use.

#### *Beneficial Effects*

Some commenters asserted that the arch could attract additional visitors, provide new views, or serve as a tourism landmark and an appealing destination.

#### *Proposed Alternatives or Mitigations Related to Visitor Experience*

Some commenters recommended enhancing the visitor experience by improving existing facilities, such as bathrooms, water access, shelter, gardens, and site maintenance; improving interpretation and accessibility; and preserving existing memorials, including maintaining open views and historic spatial relationships, rather than constructing a new monumental structure.

Some commenters recommended creating contemplative or accessible gathering areas away from traffic and focusing project investments on improving current visitor infrastructure and programming.

## Traffic and Circulation

### *Adverse Effects*

Some commenters asserted that construction would cause substantial and prolonged traffic disruptions, including multi-year lane reductions, detours, restricted turning movements, and associated safety hazards for drivers, pedestrians, and cyclists. Commenters described Memorial Circle as already one of the most important choke points between Arlington Cemetery, the Pentagon, Ronald Reagan Washington National Airport, Arlington Memorial Bridge, I-395/Route 27, Route 50, and Washington, D.C. Commenters asserted that these potential effects have not been adequately analyzed, particularly noting that existing traffic studies were insufficient to evaluate circulation, safety, and long-term effects.

Some commenters asserted that the introduction of traffic signals at Memorial Circle would fundamentally alter and undermine the operational purpose of the existing rotary, which is designed to maintain continuous vehicular flow. Signalization, whether fully timed or activated solely to accommodate pedestrian crossings, would interrupt current circulation patterns and is unlikely to sustain the levels of traffic the rotary presently supports. Some commenters specifically raised concerns regarding impacts around traffic associated with funerals and other ceremonies at Arlington National Cemetery.

Some commenters asserted that the project would exacerbate pedestrian and vehicle safety hazards. Some commenters also asserted that the arch could create safety risks for drivers because its size and placement would limit sightlines, and the required lighting could further distract motorists.

### *Beneficial Effects*

Some commenters asserted that the project could improve pedestrian safety.

### *Proposed Alternatives or Mitigations Related to Traffic and Circulation*

Some commenters suggested that the agency should consider alternative access plans, different project locations, or improvements to existing transportation infrastructure.

## Health and Safety

### *Adverse Effects*

Some commenters asserted that emergency access, emergency vehicular staging, emergency response flights and evacuation routes may be compromised by the proposed project, during both the construction and post-construction phases.

### Aviation Safety

#### *Adverse Effects*

Some commenters asserted that the arch's height poses significant airspace risks, may require the installation of aviation warning lights, and could conflict with applicable FAA regulations. Some commenters asserted that the height of the proposed arch could interfere with flight paths serving Ronald Reagan Washington National Airport. Some commenters asserted that the project could endanger pilots, passengers, and bystanders by introducing new airspace hazards in an area with a history of aviation incidents.

One commenter asserted that military helicopters frequently fly to and from the Pentagon and other locations along the river at low altitudes and the project could significantly adversely affect the safety of these flights.

Some commenters asserted that construction cranes used for the project may exceed permitted height limits and pose additional aviation safety risks during construction.

#### *Proposed Alternatives or Mitigations Related to Aviation Safety*

Some commenters recommended reducing the height of the structure or relocating it outside of active flight paths.

Some commenters asserted that full engineering, environmental, safety, and FAA studies are required to properly evaluate the project and ensure that redesigns avoid conflicts with established flight paths.

## Project Design and Location

### Arch Design and Scale

#### *Adverse Effects*

Some commenters asserted that the proposed arch's design and scale are incompatible with the surrounding monumental and historic landscape, describing it as too large, grotesque, oversized, tacky, garish, authoritarian, and stylistically at odds with the character of the civic setting; they emphasized that its massing, ornamentation, and visual intrusion would introduce a distracting and inappropriate element into the landscape.

Some commenters asserted that ornamental features such as inscriptions, gilding, and statues are inappropriate for the setting and inconsistent with national memorial design traditions.

Some commenters asserted that the arch's height would violate the 1910 Height of Buildings Act and visually dwarf the Lincoln Memorial and nearby monuments.

Some commenters asserted that the use of reinforced concrete with granite veneer rather than solid stone construction raises concerns about long-term durability, future maintenance costs, and

whether the design would meet the quality standards associated with other major monuments in Washington.

Some commenters asserted that the arch was not consistent with previous plans, noting that while the 1924 Arlington Memorial Bridge Commission report contemplated two freestanding monumental columns on Columbia Island, those elements were fundamentally different from the current proposal. The commenter noted that the historic columns were not designed as a triumphal arch, did not span the primary axis, did not include any occupied interior space, preserved open space between them, and reflected the landscape design traditions of the period.

### *Beneficial Effects*

Some commenters admired the grand scale or classical styling of the arch.

Some commenters described the arch's design as visually impressive or beautiful, describing it as majestic, magnificent, well-suited to the nation's 250th anniversary, dignified, or fitting for a national commemoration.

### *Proposed Alternatives or Mitigations Related to Arch Design and Scale*

Some commenters asserted that the arch should be redesigned without gold accents, or re-envisioned using American-rooted or modern design approaches. A commenter suggested using American Bison for statuary feature.

Some commenters asserted that a return to the original two-column concept or the development of a uniquely American design, rather than one perceived as derivative, should be explored.

Some commenters asserted that alternative commemorations of a smaller scale should be considered, including significantly reduced-height structures, small-scale features, redesigned commemorative elements, or options limited to gardens, trellises, plaques, benches, walls, fountains, time capsules, or other modest treatments.

Some commenters asserted that commemorations should reflect American values, unity, democracy, and the nation's shared ideals, including concepts such as "E Pluribus Unum." They recommended celebrating national milestones through investments in parks, infrastructure, or public services rather than constructing new monumental structures, and urged that commemorative efforts honor the American people collectively rather than individual figures.

## Arch Location – Generally

Some commenters asserted that alternative locations should be considered. Some commenters provided potential locations including: sites in Northeast and Southeast Washington, D.C., including Buzzard Point, Congressional Cemetery, and the RFK Stadium area; in Prince George's County, Maryland; over a tunnel connecting to Arlington Boulevard; or at Mar-a-Lago in Florida.

Some commenters were concerned about the safety of the project because of unstable ground conditions and potential structural failure.

## Environmental Concerns

### Lady Bird Johnson Park

#### *Adverse Effects*

Some commenters asserted that the proposed arch would disrupt the natural environment of Lady Bird Johnson Park, including impacts to wetlands, wildlife, habitat areas, and the park's mature tree canopy; worsen stormwater problems in Lady Bird Johnson Park, increase impervious surfaces, and contribute to long-term ecological degradation; and threaten the natural beauty of the Park within this scenic and environmentally sensitive landscape.

#### *Proposed Alternatives or Mitigations Related to Lady Bird Johnson Park*

Some commenters asserted that Lady Bird Johnson Park should be restored and maintained rather than altered by the construction of a large new monument.

### Water Quality

#### *Adverse Effects*

Some commenters asserted that the project would worsen stormwater runoff due to increased impervious surfaces, resulting in potential degradation of water quality and adverse effects on the Potomac River ecosystem and adjacent natural areas, creating long-term ecological and hydrological impacts.

#### *Proposed Alternatives or Mitigations Related to Water Quality*

Some commenters recommended implementing stormwater management controls, habitat restoration, and other mitigation measures to protect water quality and ecological resources.

### Air Quality

#### *Adverse Effects*

Some commenters asserted that the project raises air quality concerns and could intensify environmental health risks in an area already experiencing congestion-related impacts.

### Environmental – General

#### *Adverse Effects*

Some commenters asserted that the project would result in loss of green space, tree removal, and long-term landscape disruption, diminishing the natural character of nearby parklands; harm wildlife through habitat loss, ecosystem disruption, and potential impacts on bird migration; increase light pollution, noise, and other forms of environmental degradation; and worsen stormwater issues, soil impacts, and cumulative environmental effects.

#### *Proposed Alternatives or Mitigations Related to Environmental Issues-General*

Some commenters recommended prioritizing conservation, ecological restoration, and long-term stewardship of natural resources rather than constructing new features.

Some commenters recommended directing funds toward the restoration of existing parklands, removal of invasive species, and enhancement of native habitat.

## Decision-Making Process & Public Input

### Public Review and Input

Some commenters asserted that the decision-making process is rushed, lacks transparency, and bypasses established review procedures; and that public engagement has been insufficient, citing short comment periods, inadequate consultation, limited outreach, and a perception that outcomes were predetermined.

Commentors asserted that organizations were denied consulting party status, contrary to past practice, undermining expert input.

Some commenters expressed concern that the project was being advanced before it was sufficiently developed to allow for meaningful public evaluation. They noted that the Programmatic Agreement acknowledges that key design details are not yet developed and that effects would need to be assessed in future reviews. Commenters also pointed out that the draft PA contains unresolved placeholders which they viewed as evidence that the review record is not yet mature.

#### *Proposed Alternatives or Mitigations Related to Public Review and Input*

Some commenters recommended a full, transparent process, including an evaluation of a no-build alternative, extended public comment periods, and full publication of NEPA and Section 106 documentation.

Some commenters recommended offering greater public involvement through a national design competition, public referendum, or broader stakeholder consultation.

Some commenters recommended procedural improvements such as protecting personal data upon request and finalizing design details before developing any Memorandum of Agreement.

## Socioeconomics, Operations

### Socioeconomics

Some commenters requested NPS complete a cost benefit analysis before proceeding with the process. Others were concerned that the cost was too great compared to the economic benefits and others asserted private funds should be used rather than Federal funds.

### National Park Service Operations

Some commenters asserted that the arch would divert funds away from park maintenance, staffing, and essential operations, creating additional operational strain and liabilities.

## APPENDIX B. FIGURES

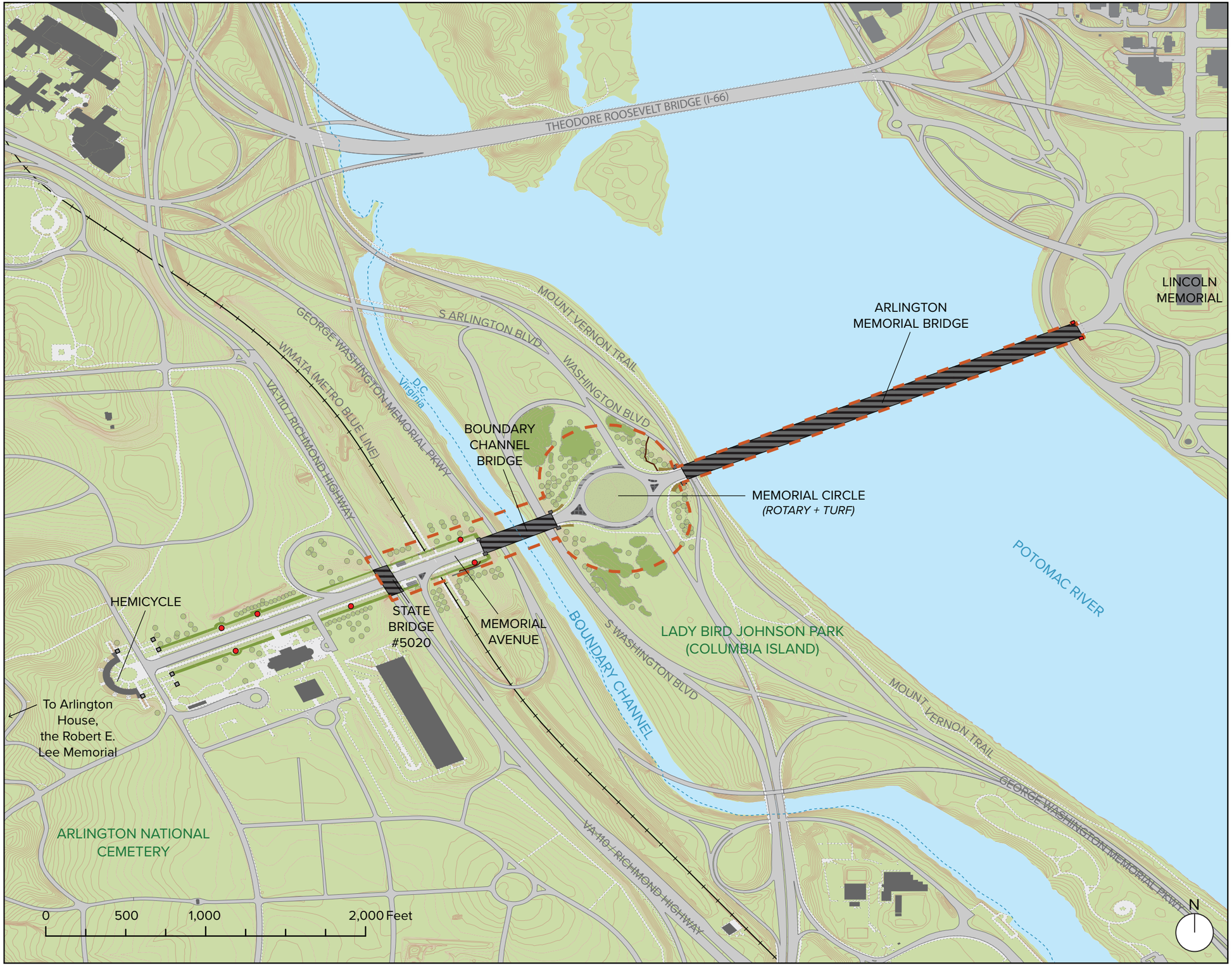


# Memorial Avenue Corridor Cultural Landscape Report

## George Washington Memorial Parkway

## Locator Map

### SOURCES

1. Open data DC, https://opendata.dc.gov/, accessed Sept. 2022
2. Field survey and data collection, 2022
3. Commonwealth of Virginia, DC GIS, Maxar, Microsoft (base imagery)
4. NPS Geospatial data

### DRAWN BY

Ruth Penberthy / Chen Mao / Meg Frisbie / Molly Lester, University of Pennsylvania
ArcGIS Pro, Adobe Illustrator, 2023

### LEGEND

- Cultural Landscape Boundary
- Topography (2ft intervals)
- Water
- Metro (WMATA) Line
- Building / Structure *(other than bridge)*
- Bridge (Structure)
- *Arts of War* (Structure)
- Memorial (Structure)
- Circulation - Road
- Circulation - Sidewalk
- Vegetation

### NOTES

1. All features shown in approximate scale and locations
2. Vegetation locations, scale, and quantities are approximated from fieldwork and aerial photography

Weitzman School of Design
University of Pennsylvania
**Urban Heritage Project**
**Department of Historic Preservation | PennPraxis**
*www.cultural-landscapes.org*

**DRAWING #1**

**Figure 1**

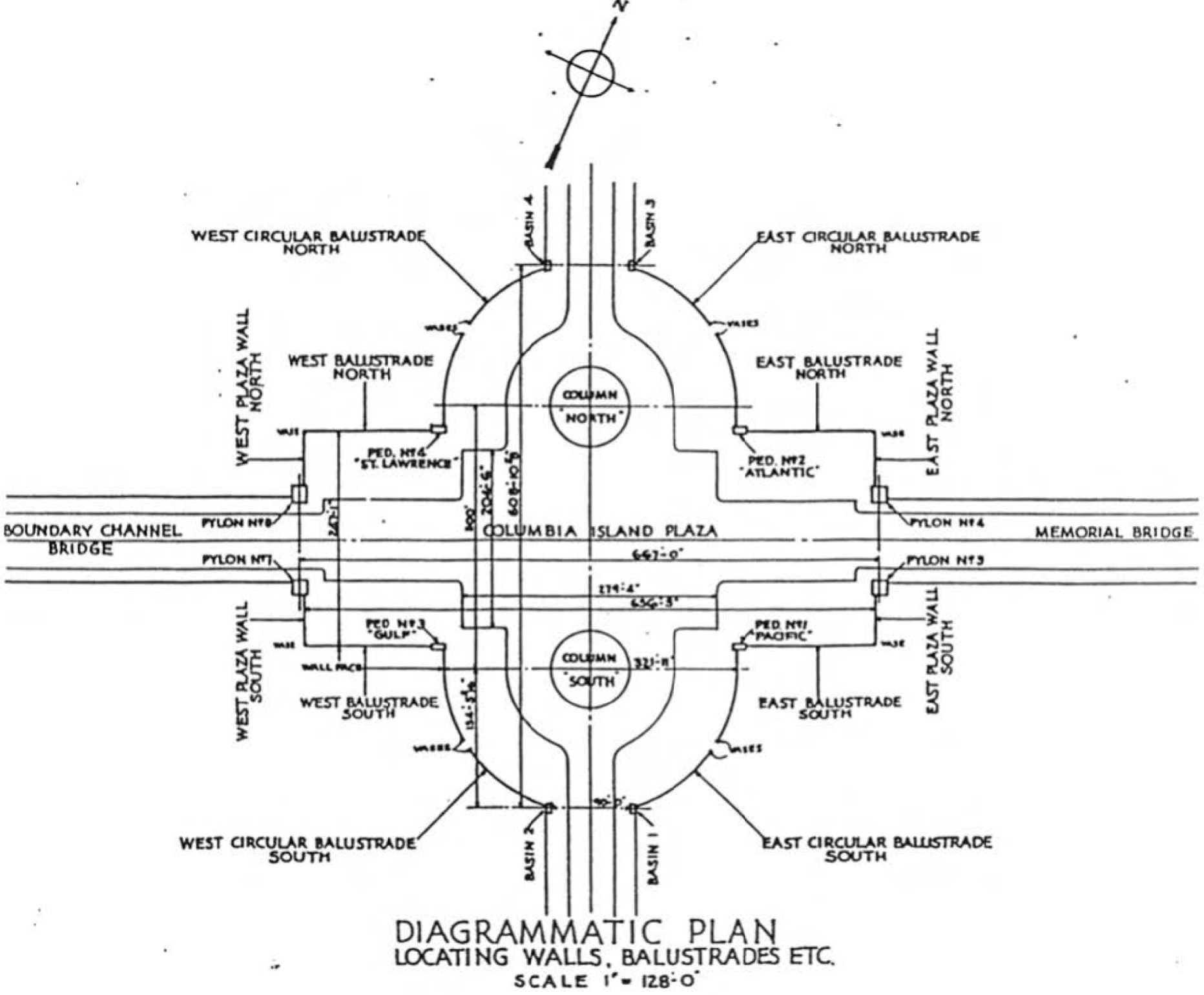
WEST CIRCULAR BALUSTRADE NORTH
EAST CIRCULAR BALUSTRADE NORTH
BASIN 4
BASIN 3
WEST PLAZA WALL NORTH
WEST BALUSTRADE NORTH
EAST BALUSTRADE NORTH
EAST PLAZA WALL NORTH
COLUMN "NORTH"
PED. Nº4 "ST. LAWRENCE"
PED. Nº2 "ATLANTIC"
PYLON Nº8
PYLON Nº4
BOUNDARY CHANNEL BRIDGE
COLUMBIA ISLAND PLAZA
MEMORIAL BRIDGE
PYLON Nº1
PYLON Nº3
662'-0"
279'-4"
656'-3"
PED. Nº3 "GULF"
PED. Nº1 "PACIFIC"
WEST PLAZA WALL SOUTH
EAST PLAZA WALL SOUTH
COLUMN "SOUTH"
321'-8"
WEST BALUSTRADE SOUTH
EAST BALUSTRADE SOUTH
WEST CIRCULAR BALUSTRADE SOUTH
EAST CIRCULAR BALUSTRADE SOUTH
BASIN 2
BASIN 1
DIAGRAMMATIC PLAN
LOCATING WALLS, BALUSTRADES ETC.
SCALE 1" = 128'-0"

**Figure 2**

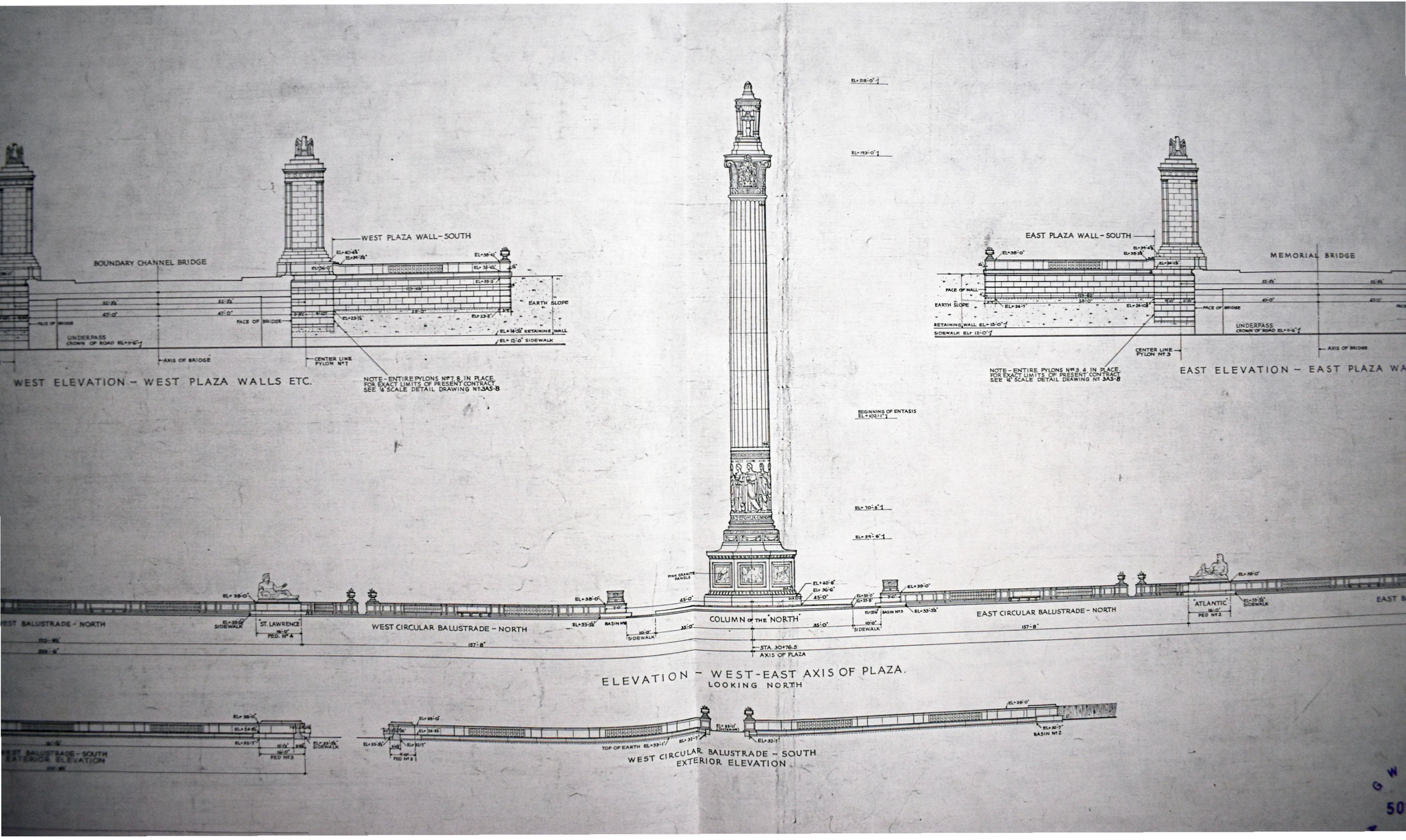
WEST PLAZA WALL – SOUTH
BOUNDARY CHANNEL BRIDGE
EARTH SLOPE
FACE OF BRIDGE
UNDERPASS
CROWN OF ROAD EL+11'-6"
AXIS OF BRIDGE
CENTER LINE
PYLON N°7
EL+14'-10" RETAINING WALL
EL+12'-0" SIDEWALK
NOTE – ENTIRE PYLONS N°7 & 8 IN PLACE.
FOR EXACT LIMITS OF PRESENT CONTRACT
SEE ¼" SCALE DETAIL DRAWING N°3A5-8
WEST ELEVATION – WEST PLAZA WALLS ETC.
EAST PLAZA WALL – SOUTH
MEMORIAL BRIDGE
FACE OF WALL
EARTH SLOPE
RETAINING WALL EL+13'-0"
SIDEWALK EL+12'-0"
FACE OF BRIDGE
UNDERPASS
CROWN OF ROAD EL+11'-6"
AXIS OF BRIDGE
CENTER LINE
PYLON N°3
NOTE – ENTIRE PYLONS N°3 & 4 IN PLACE.
FOR EXACT LIMITS OF PRESENT CONTRACT
SEE ¼" SCALE DETAIL DRAWING N°3A5-8
EAST ELEVATION – EAST PLAZA WA
EL+218'-0"
EL+193'-0"
BEGINNING OF ENTASIS
EL+102'-1"
EL+70'-6"
EL+54'-6"
PINK GRANITE PANELS
COLUMN OF THE "NORTH"
STA. 30+76.5
AXIS OF PLAZA
WEST BALUSTRADE – NORTH
ST. LAWRENCE
PED. N°4
WEST CIRCULAR BALUSTRADE – NORTH
BASIN N°8
SIDEWALK
EAST CIRCULAR BALUSTRADE – NORTH
ATLANTIC
PED N°2
BASIN N°3
BASIN N°2
ELEVATION – WEST-EAST AXIS OF PLAZA.
LOOKING NORTH
WEST BALUSTRADE – SOUTH
EXTERIOR ELEVATION
PED N°3
TOP OF EARTH EL+33'-1"
WEST CIRCULAR BALUSTRADE – SOUTH
EXTERIOR ELEVATION

**Figure 3**

# Triumphal Arch Project

# Addendum - Public Comment Summary Response Report

A public comment period for the proposed Triumphal Arch project was conducted from June 5, 2026, to June 15, 2026, in accordance with Section 106 of the National Historic Preservation Act (NHPA) and its implementing regulations at 36 CFR Part 800. Due to additional public interest, the National Park Service (NPS) extended the opportunity to comment from July 10, 2026, to July 30, 2026. Project materials were provided through the Planning, Environment, and Public Comment (PEPC) system, and comments were accepted on the same platform. This comment period allowed consulting parties, organizations, and members of the public an additional opportunity to review the Assessment of Effects and the draft Programmatic Agreement and to provide feedback on these materials, consistent with the requirements of 36 CFR Part 800. During this July comment period, the NPS received a total of 6,254 comments.

To develop this report, the NPS downloaded the public comments from PEPC and other channels and used artificial intelligence (AI) tools to organize the comments by subject matter themes. NPS staff with expertise in the subjects involved developed and tested tailored prompts to ensure the AI outputs accurately reflected the full range of issues raised by commentors. Using these AI-generated digests as a foundation, NPS subject matter experts reviewed the comments, synthesized them into broader themes, and prepared this comment report.

Most of the comments submitted during this comment period were already addressed in the summary report prepared for the previous comment period. To avoid redundancy, NPS has prepared this addendum to highlight only the new comments received.

# Cultural Resources

## Lincoln Memorial

### *Proposed Alternatives or Mitigations Related to Lincoln Memorial*

Some commenters suggested that the arch opening should be aligned so visitors on the bridge can see the full Lincoln Memorial through the arch and should honor both the Civil War veterans at Arlington and the 250th.

## Arlington National Cemetery

### *Adverse Effects*

Some commenters noted that the Arch would increase visitors to the area which would disrupt the solemnity of the area.

Commenters asserted that NPS did not fully consider potential impacts to the following historic properties within Arlington National Cemetery:
Sections 30, 36A, 51, 53, 55, 56, 57, 60, 66, 73, 74, 75, and 76, including the Taft Memorial in Section 30 and General Colin Powell's grave in Section 60.

### George Washington Memorial Parkway and Memorial Circle

#### *Adverse Effects*

Commenters asserted that the project would have an adverse impact on major events in the area (e.g., Cherry Blossom 10 Mile Run, Marine Corps Marathon) because of traffic and other congestion.

#### *Beneficial Effects*

Some commenters noted that planned transportation improvements (e.g. safer crossings, wider trails) are beneficial and should proceed independently of the arch.

### National Mall

#### *Adverse Effects*

Some commenters expressed concern that the project erodes established planning norms for the National Mall.

### Historic Bridges

#### *Adverse Effects*

Some commenters expressed concern about the loss of the historic granite pylons and the integrity of the Memorial Avenue Corridor.

#### *Proposed Alternatives or Mitigations Related to Historic Bridges*

Some commenters suggested restoring or maintaining existing historic bridges and resources instead of constructing new monuments

### Cultural Landscapes - Generally

#### *Adverse Effects*

Some commenters were concerned about the cumulative effects on the broader monumental landscape, including lighting, utilities, and security features.

## Visitor Experience, Access, and Safety Concerns

### Traffic and Circulation

#### *Negative Impacts*

Some commenters highlighted adverse impacts to major events (e.g., the Cherry Blossom 10 Mile Run, Marine Corps Marathon) from increased congestion.

*Beneficial Effects*

Commenters expressed support for planned transportation improvements (e.g., safer crossings, wider trails).

*Proposed Alternatives or Mitigations Related to Traffic and Circulation*

Some commenters suggested pursuing the transportation upgrades independent of the Arch project, including suggestions to pedestrianize parts of Memorial Circle or improve bike infrastructure.

# Project Design and Location

## Arch Design and Scale

*Proposed Alternatives or Mitigations Related to Arch Design and Scale*

Commenters proposed the following instead of a Triumphal Arch: a 250th anniversary museum, amenity improvements to Ladybird Park, additional educational programs.

Some commenters proposed choosing the final design in a distinctly American manner, such as holding a public design competition. Others suggested that the final design should be selected by veterans' organizations.

One commenter submitted a detailed alternative design ("Independence Arch") that aims to preserve sightlines and offer a more American civic monument.

Commenters noted that the project to celebrate the 250th should reflect "shared values," "democratic ideals," or "collective achievement."

## Arch Location -Generally

*Proposed Alternatives or Mitigations Related to Arch Location*

Commenters proposed specific locations for the Arch: South Capitol Street, Chevy Chase Circle, near stadiums or Route 1, Commodore Joshua Barney Circle, and near Nationals Park.

# Decision Making Process & Public Input

## Public Review and Input

*Beneficial Effects*

Commenters appreciated the opportunity to provide public input noting appreciation for the reopening of the public comment period.

*Proposed Alternatives or Mitigations Related to Public Review and Input*

Commenters asserted construction should be delayed for further public and professional input and competitive design selection.

# Area of Potential Effects on Historic Properties

**George Washington Memorial Parkway**
Washington, D.C.

## Area of Potential Effects on Historic Properties | Triumphal Arch Site

National Register Historic Properties

### Sources

1. ESRI World Imagery Basemap
2. NCR Cultural Resources GIS

### LEGEND

- Area of Potential Effects
- Direct Effects Boundary
- Project Area
- Construction Staging Area
- Potential Utility Corridors

#### Individual Structures

- 6 Arlington House (Robert E. Lee Memorial)
- 15 Lockkeeper's House, C & O Canal Extension
- 16 56 Signers Memorial
- 20 Civil War Monuments in Washington, D.C. (Adjacent Lands)
- 23 American Revolutionary Statuary in the District of Columbia
- 25 Cuban Friendship Urn
- 30 Quarters 1 (NHL- Adjacent Lands)
- 33 Washington Canoe Club
- 39 U.S. Capitol Gatehouses and Gateposts

#### District Boundaries

- 2 Arlington Memorial Bridge and Related Features
- 4 Arlington National Cemetery Historic District
- 5 Arlington House Historic District (also known as Robert E. Lee Historic District)
- 8 Lyndon Baines Johnson Memorial Grove on the Potomac
- 9 Mount Vernon Memorial Highway
- 11 Lincoln Memorial
- 12 National Mall
- 13 World War II Memorial
- 14 Martin Luther King Jr. Memorial
- 18 Washington Monument and Grounds Historic District
- 21 Rock Creek Park and Potomac Parkway Historic District
- 22 East and West Potomac Parks Historic District
- 26 Franklin Delano Roosevelt Memorial
- 27 Arlington Ridge Park
- 28 Pentagon (NHL- Adjacent Lands)
- 29 Fort Myer Historic District (NHL- Adjacent Lands)
- 31 Theodore Roosevelt Island
- 35 Thomas Jefferson Memorial
- 37 DC War Memorial
- 38 United States Capitol (NHL- Adjacent Lands)
- 40 Smithsonian Building (NHL- Adjacent Lands)
- 41 Georgetown Historic District (NHL- NPS and Adjacent Lands)
- 42 Old Naval Observatory (NHL- Adjacent Lands)
- 43 Pennsylvania Avenue National Historic Site

### Notes

1. Projection: NAD 1983
2. PRELIMINARY (2026)

**National Park Service**
National Capital Region

**Drawing #1**

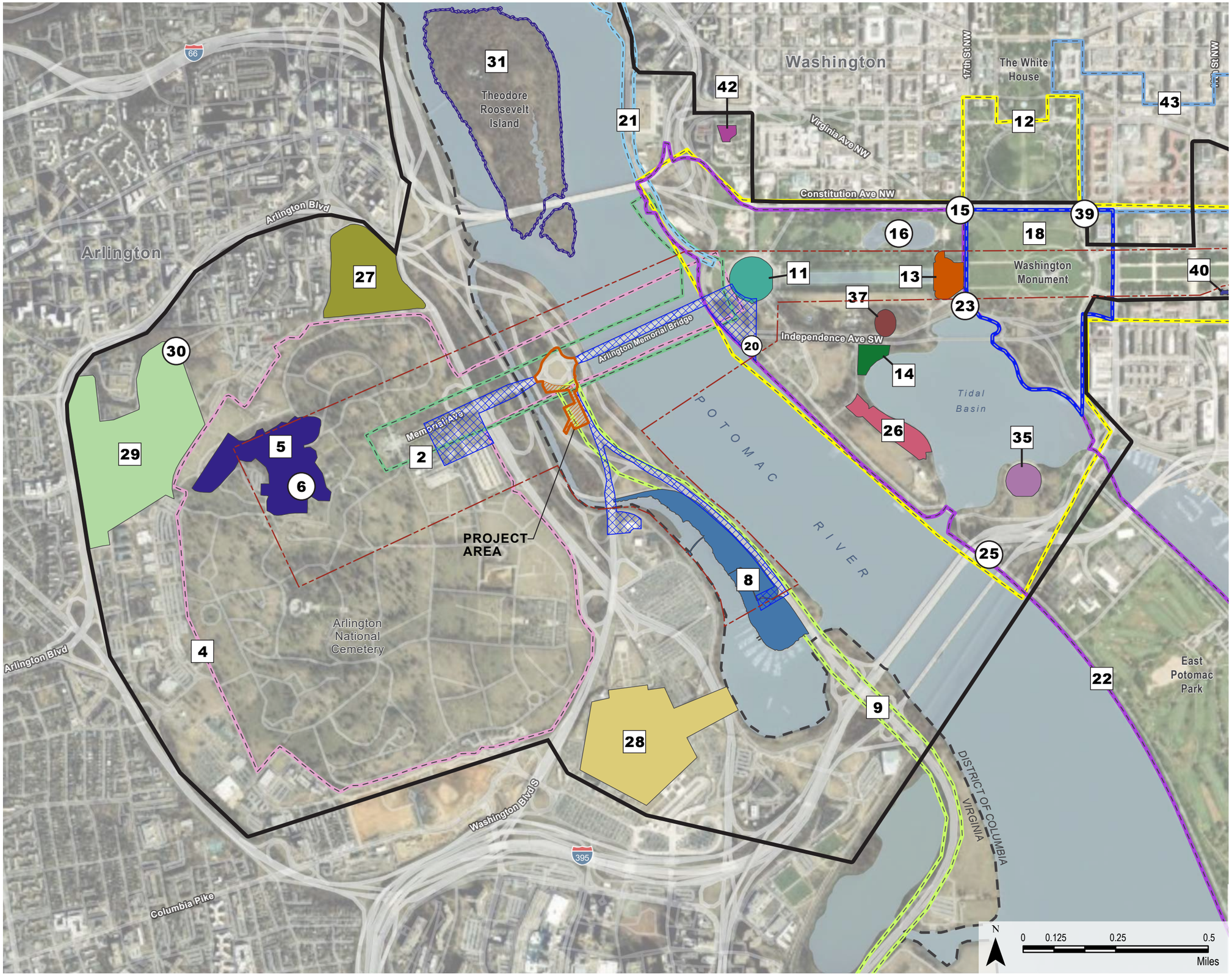


# Area of Potential Effects on Historic Properties

**George Washington Memorial Parkway**
Washington, D.C.

## Area of Potential Effects on Historic Properties | Triumphal Arch Site

National Register Historic Properties

### Sources

1. ESRI World Imagery Basemap
2. NCR Cultural Resources GIS

### Legend

- Area of Potential Effects
- Direct Effects Boundary
- Project Area
- Construction Staging Area
- Potential Utility Corridors

### Individual Structures

- 6 Arlington House
- 15 Lockkeeper's House, C & O Canal Extension
- 16 56 Signers Memorial
- 20 Civil War Monuments in Washington, D.C. (Adjacent Lands)
- 23 American Revolutionary Statuary in the District of Columbia
- 25 Cuban Friendship Urn
- 30 Quarters 1 (NHL- Adjacent Lands)
- 39 U.S. Capitol Gatehouses and Gateposts

### District Boundaries

- 2 Arlington Memorial Bridge and Related Features
- 4 Arlington National Cemetery Historic District
- 5 Arlington House Historic District (also known as Robert E. Lee Historic District)
- 8 Lyndon Baines Johnson Memorial Grove on the Potomac
- 9 Mount Vernon Memorial Highway
- 11 Lincoln Memorial
- 12 National Mall
- 13 World War II Memorial
- 14 Martin Luther King Jr. Memorial
- 18 Washington Monument and Grounds Historic District
- 21 Rock Creek Park and Potomac Parkway Historic District
- 22 East and West Potomac Parks Historic District
- 26 Franklin Delano Roosevelt Memorial
- 27 Arlington Ridge Park
- 28 Pentagon (NHL- Adjacent Lands)
- 29 Fort Myer Historic District (NHL- Adjacent Lands)
- 31 Theodore Roosevelt Island
- 35 Thomas Jefferson Memorial
- 37 DC War Memorial
- 40 Smithsonian Building (NHL- Adjacent Lands)
- 42 Old Naval Observatory (NHL- Adjacent Lands)
- 43 Pennsylvania Avenue National Historic Site

### Notes

1. Projection: NAD 1983
2. PRELIMINARY (2026)

**National Park Service**
National Capital Region

**Drawing #1A**

# Area of Potential Effects on Historic Properties

**George Washington Memorial Parkway**
Washington, D.C.

## Area of Potential Effects on Historic Properties | Triumphal Arch Site

Cultural Landscapes

**Sources**

1. ESRI World Imagery Basemap
2. NCR Cultural Resources GIS

**Legend**

- Area of Potential Effects
- Direct Effects Boundary
- Project Area
- Construction Staging Area
- Potential Utility Corridors

- 1 Memorial Avenue Corridor
- 3 Lady Bird Johnson Park
- 7 Arlington House
- 8 Lyndon Baines Johnson Memorial Grove on the Potomac
- 10 Lincoln Memorial
- 17 The Mall
- 19 Washington Monument Grounds
- 24 Mount Vernon Memorial Highway - North of Alexandria
- 27 Arlington Ridge Park
- 32 Theodore Roosevelt Island
- 33 Washington Canoe Club
- 34 George Mason Memorial
- 36 Thomas Jefferson Memorial
- 37 DC War Memorial

**Notes**

1. Projection: NAD 1983
2. PRELIMINARY (2026)

**National Park Service**
National Capital Region

**Drawing #2**

# Area of Potential Effects on Historic Properties

**George Washington Memorial Parkway**
Washington, D.C.

## Area of Potential Effects on Historic Properties | Triumphal Arch Site

Cultural Landscapes

**Sources**

1. ESRI World Imagery Basemap
2. NCR Cultural Resources GIS

**Legend**

- Area of Potential Effects
- Direct Effects Boundary
- Project Area
- Construction Staging Area
- Potential Utility Corridors

- 1 Memorial Avenue Corridor
- 3 Lady Bird Johnson Park
- 7 Arlington House
- 8 Lyndon Baines Johnson Memorial Grove on the Potomac
- 10 Lincoln Memorial
- 17 The Mall
- 19 Washington Monument Grounds
- 24 Mount Vernon Memorial Highway - North of Alexandria
- 27 Arlington Ridge Park
- 32 Theodore Roosevelt Island
- 34 George Mason Memorial
- 36 Thomas Jefferson Memorial
- 37 DC War Memorial

**Notes**

1. Projection: NAD 1983
2. PRELIMINARY (2026)

**National Park Service**
National Capital Region

**Drawing #2A**

# APPENDIX D. HISTORIC PROPERTIES AND ASSESSMENT OF ADVERSE EFFECTS TABLES

**Table 1. Historic Properties within the Area of Direct Effects**

| Map ID | Resource Name | | NRHP Designation |
|---|---|---|---|
| **1** | Memorial Avenue Corridor Cultural Landscape | | National Register of Historic Places (NRHP) cultural landscape |
| | | Memorials: 101st Airborne Division Memorial, 4th Infantry Division Memorial, American Armored Force Memorial, Seabees Memorial, United Spanish War Veterans Memorial (The Hiker), Women in Military Service for America Memorial | Contributing |
| | | Statues and Monuments: Arts of War-Sacrifice, Arts of War-Valor, Rear Admiral Richard Evelyn Byrd Monument | Contributing |
| | | Arlington Hemicycle and Pylons | Contributing |
| | | Arlington Hemicycle circular pool (including basin in central niche) | Contributing |
| | | Arlington National Cemetery Gates and Gate Pylons (Gatehouses) | Contributing |
| **2** | | Arlington Memorial Bridge and Related Features | Contributing/NRHP |
| | | Memorial Avenue Bridge (Arlington Memorial Bridge Extension, also referenced as Boundary Channel Bridge) | Contributing |
| | | Memorial Circle Pylons | Contributing |
| | | Circulation: Memorial Avenue, Memorial Circle, and the pedestrian system on the two bridges (Memorial and Arlington) and avenues | Contributing |
| | | Boundary Channel below Memorial Avenue Bridge (Arlington Memorial Bridge Extension) | Contributing |
| | | Small-scale features: original cast-iron inlet grates along both bridges and Memorial Avenue; Washington standard lampposts, "Durax" centerline of Memorial Avenue and both bridges; granite block "Durax" surface of Memorial Avenue Bridge; granite curbstones; granite header stones at the ends of bridges; granite lamppost bases; paving of sidewalks on two bridges and avenue, and triangular "islands" of granite blocks at east and west ends of Memorial Circle | Contributing |
| | | Vegetation: Grass panels and Holly hedge along Memorial Avenue, White oak border of Memorial Avenue, White pines at four pylons near Memorial Circle, White oaks near Arlington Cemetery gates and hemicycle stairways, Yews along hemicycle stairways and wrought iron fence | Contributing |
| | | Views and vistas: View of the Washington Monument from various locations along the corridor, view to hemicycle and Arlington House - the Robert E. Lee Memorial, view to Lincoln Memorial, views of green parkland along both sides of Potomac from Arlington Memorial Bridge, and views to river, the Capitol dome, and other monuments from Memorial Circle | Contributing |
| **3** | Lady Bird Johnson Park Cultural Landscape | | NRHP cultural landscape |
| | | Circulation: George Washington Memorial Parkway (GWMP) (see below under George Washington Memorial Parkway Cultural Landscape); Lyndon B. Johnson Memorial Grove; Memorial Circle; Mount Vernon Memorial Highway; Mount Vernon Trail (southern portion, to Humpback Bridge); Columbia Island Marina, parking lot and entrance to Lyndon Baines Johnson (LBJ) Memorial Grove | Contributing |
| | | Vegetation: All of the stone plantings, Cottonwoods, crabapple, pear and elm trees remaining from 1932 planting, daffodils, dogwoods, large white pines near pylons, plantings of LBJ Memorial Grove, yews at Navy and Merchant Marine Memorial | Contributing |

| Map ID | Resource Name | | NRHP Designation |
|---|---|---|---|
| | | Buildings and Structures: Arlington Memorial Bridge Boundary Channel Extension; Bridge over Boundary Channel; Boundary Channel Bridge (New); Columbia Island Marina snack bar; Memorial Circle, four pylons; rip rap, historic, south end of island; LBJ Memorial Grove, wooden entrance deck on Virginia shore including walks, stone walls, etc.; LBJ Memorial Grove, megalith; LBJ Memorial Grove, flagstone plaza; LBJ Memorial Grove, entire site; LBJ Memorial Grove, pedestrian bridge; Navy and Merchant Marine Memorial; flagstone plaza; U.S. Route 50 Overpass, westbound; Washington Boulevard Bridge; Washington Boulevard Overpass; Arlington Memorial Bridge; LBJ Memorial Grove, low stone-and-concrete wall along flagstone walk | Contributing |
| | | Views and vistas: GWMP, northbound views north of Arlington Memorial Bridge to Theodore Roosevelt Island, D.C. shoreline, Kennedy Center; GWMP, northbound views to LBJ Memorial Grove, megalith, and Navy and Merchant Marine Memorial; GWMP, northbound views to Washington shoreline and National Mall; GWMP, northbound views up river to Arlington Memorial Bridge; LBJ Memorial Grove views and vistas along entry route, from plaza on VA shore, across bridge, along walks to meadow area and to Grove and flagstone plaza; LBJ Memorial Grove vistas from flagstone plaza to National Mall and East and West Potomac Parks; Memorial Circle views east to Lincoln Memorial, west to Arlington House and Arlington National Cemetery, north up island and south down island; Mount Vernon Trail views along trail near Potomac River shore, corresponding to views from northbound and southbound GWMP | Contributing |
| | | Small-scale features: benches, granite panels, light posts, plaque, drinking fountains, guardrails | Contributing |
| | | Water features: Boundary Channel; Columbia Lagoon (also called Columbia Basin, Pentagon Lagoon) | Contributing |
| 4 | Arlington National Cemetery Historic District | | NRHP historic district |
| | | Vegetation and Landscapes: Argonne Cross Landscape; Arlington Hemicycle Landscape; Chaplains Hill; Civil War Unknowns Landscape; Columbarium Courts Landscape; Confederate Memorial Section; Custis Woods; James Tanner Amphitheater; Kennedy Family Gravesites; Memorial Amphitheater; Memorial Arboretum; Millenium Woods and Stream; Nurses Memorial Associated Features; Pershing Gravesite Landscape; Red Spring Landscape; Scatter Area; Trees, Medal of Honor; Trees, Memorial Tres; Trees, State Champions and Co-Champions; U.S. Coast Guard Memorial; picturesque plantings patterns, hedgerows, oak trees | Contributing |
| | | Views and vistas: View of Air Force Memorial; View of Arlington House from Kennedy Memorial; View to Arlington House down Crook Walk from Memorial Amphitheater; View of Arlington National Cemetery (ANC) from Memorial Bridge Memorial Drive, and Lincoln Memorial; View of ANC from Washington D.C. Potomac Shoreline (between 14th Street Bridge and Memorial Bridge); View of Lincoln Memorial and Washington Monument from Arlington House, Kennedy Gravesite; View to Main Gates from Southern perspective and Northern perspective; Views to Memorial Amphitheater from various locations; View to Netherlands Carillon; View of Old Amphitheater from various locations; View of the Pentagon from Pentagon Memorial; View to Spanish-American War Memorial from U.S.S Maine Memorial; View to U.S.S Maine Memorial from Memorial Amphitheater; View toward Fort Myer Gate and Chapel from ANC; Views of Washington Monument from ANC | Contributing |
| | | Boundary Gates, Demarcations and Walls: Welcome Center Gate; Welcome Center Parking Gate; Administration Building Gate; East /Jefferson Davis Highway Gate; Service Complex Gate; South/Clayton Gate; Hobson Gate; Memorial Chapel Gate; West Gate (Selfridge); Fort Meyer/Old Post Chapel Gate; Ord & Weitzel Gate (New); Memorial Avenue north gate; Memorial Avenue south gat | Contributing |
| | | Circulation Systems: Crook Walk; Custis Walk; Custis Walk Extension; Footbridges, Crook Walk; Memorial Avenue ("Avenue of Heroes"); Memorial Avenue Fountain Plaza; Memorial Avenue West Terminus (Cobblestone Drive); Millenium Bridge (Gifford Drive Bridge); Pedestrian Bridge; Road System; Sidewalks; Stairs and stone steps | Contributing |
| | | Drainage Features: Select Drainage Ditches and Culverts; Historic Concrete Channels; Red Spring | Contributing |

| Map ID | Resource Name | | NRHP Designation |
|---|---|---|---|
| | | Monuments and Memorials: 2nd Connecticut (Volunteer) Heavy Artillery Regiment; Civil War Headstones; Confederate Headstones; 1903 Government Headstones; USCT and Freedman Village Residents; “Standard” Headstones; Flat Headstones; Victorian-Era Monuments; Group Headstones; 3rd Infantry Division Memorial; 4th Infantry (Ivy) Division Memorial; 101st Airborne Division Memorial; Air Force Memorial Complex; Apollo 1 Memorial Plaque; Argonne Cross (and associated features); Armored Forces Memorial; Chaplains Hill; Battle of the Bulge Memorial; Richard Evelyn Byrd Memorial; Canadian Cross Memorial; Civil War Unknown; Confederate Memorial; Iran Rescue Mission Memorial; John F. Kennedy Memorial Gravesite; Robert F. Kennedy Memorial Gravesite; Korean War Veterans Memorial; Nurses Memorial; Office of Strategic Services Memorial; Pan Am Flight 103 Memorial; Pentagon Group Burial Marker; Rough Riders Memorial; Space Shuttle Challenger Memorial; Space Shuttle Columbia Memorial; Spanish-American War Memorial; Third Infantry Division Memorial; Tomb of Remembrance; Tomb of the Unknowns and Associated Features; U.S. Coast Guard Monument; U.S.S. Maine Memorial; U.S.S. Serpens Memorial; U.S.S Thresher Memorial; Unknown Dead of 1812; Tree Memorial Markers & Living Memorials | Contributing |
| | | Memorial Graves: Custis Graves; George Crook; Sir John Dill Monument; Matthew Henson; Philip Kearny Monument; Edward M. Kennedy; Major Pierre L’Enfant; Robert Todd Lincoln; Audie Murphy; Gen. John Pershing; Robert Edwin Peary; Mary Randolph; Wallace Fitz Randolph; Revolutionary War Ground Tablets; Philip Henry Sheridan; William H. Taft; John Wingate Weeks; MG Horatio Wright | Contributing |
| | | Small-scale features: Arlington House Flagpole, benches, bollards, drinking fountains, exterior lighting, | Contributing |
| | | Arlington House | Contributing/NRHP |
| | | Arlington Memorial Bridge | Contributing/NRHP |
| | | Arlington House Cultural Landscape | Contributing/NRHP |
| | | Arlington Hemicycle / Military Women’s Memorial | Contributing |
| | | Administration Building | Contributing |
| | | Columbarium Pavilion 1 | Contributing |
| | | Columbarium Pavilion 2 | Contributing |
| | | Millenium Pavilion 11 | Contributing |
| | | Millenium Pavilion 12 | Contributing |
| | | Hemicycle (“The Court of Honor”, “The Great Entrance”, Military Women’s Memorial) | Contributing |
| | | Lodge 1 (Superintendent’s Lodge) | Contributing |
| | | Lodge 1 Gazebo | Contributing |
| | | Lodge 2 (Assistant Superintendent's Lodge) | Contributing |
| | | Lodge 2 Garage | Contributing |
| | | Memorial Amphitheater | Contributing |
| | | Old Amphitheater (James R. Tanner Amphitheater) | Contributing |
| | | Parking: Chaffee Lot; Funereal Queuing; Wheaton Lot | Contributing |

| Map ID | Resource Name | | NRHP Designation |
|---|---|---|---|
| | | Receiving Vault | Contributing |
| | | Service Complex #1 (4 buildings) | Contributing |
| | | Service Complex #2 (8 buildings) | Contributing |
| | | Tourmobile (Tram) Bus Stop Structure (Tour Bus Shelter) | Contributing |
| | | Welcome Center (Visitor's Center) | Contributing |
| **5** | Arlington House Historic District (also known as Robert E. Lee Historic District) | | NRHP historic district |
| | | Site: Landscape and associated features | Contributing |
| **6** | | Arlington House (also known as the Robert E. Lee Memorial) | Contributing/NRHP |
| | | North Slave Quarter and Kitchen | Contributing |
| | | South Slave Quarter, Storehouse, and Smokehouse | Contributing |
| | | Potting Shed | Contributing |
| | | National Park Service Administration Building, 1931 | Contributing |
| | | Mary Randolph's Tomb | Contributing |
| | | Custis Burial Plot | Contributing |
| | | Civil War-era Officers' Graves and Grave Markers Site along Lee Avenue and East of Mansion | Contributing |
| | | Well, ca. 1805, superstructure | Contributing |
| | | Civil War Unknown Soldiers Monument, 1866 | Contributing |
| | | Arlington National Cemetery Old Amphitheater | Contributing |
| | | General Sheridan, Admiral Porter, and General Wright Monuments | Contributing |
| | | Pierre Charles L'Enfant Grave and Monument | Contributing |
| | | Arlington House Cultural Landscape | Contributing |
| **7** | Arlington House Cultural Landscape | | NRHP cultural landscape |
| | | Land Use: Arlington Woods; Flower and Vegetable Gardens | Contributing |
| | | Spatial Organization: Building locations; yard; garden terraces; Arlington Woods | Contributing |
| | | Buildings and Structures: Arlington House; North Slave Quarters; South Slave Quarters; Potting shed; Below-ground section of well | Contributing |

| Map ID | Resource Name | | NRHP Designation |
|---|---|---|---|
| | | Circulation: Trace road at the north end of Arlington Woods; Flower garden central path; Kitchen garden central path; East/west oriented road connecting Lee Drive and Sherman Avenue between yard and flower garden; Potting shed access road; Portion north/south section of Custis Walk on National Park Service property | Contributing |
| | | Vegetation: trees in mixed hardwood forest of Arlington Woods ravine | Contributing |
| | | Views and Vistas: View between Arlington House and Washington, D.C.; View between kitchen garden, through yard to flower garden; view north and south along Lee Drive | Contributing |
| | | Small-scale features: rectangular cut bench or mounting stone | Contributing |
| **8** | LBJ Memorial Grove | | NRHP |
| **9** | Mount Vernon Memorial Highway | | NRHP historic district |
| | | Richmond, Fredericksburg & Potomac Railroad (RF&P) Underpass | Contributing |
| | | Route 1/I-395 Downstream Underpass | Contributing |
| | | Route 1/I-395 Upstream Underpass | Contributing |
| | | Mount Vernon Memorial Highway alignment | Contributing |
| | | Mount Vernon Trail adjacent to the Mount Vernon Memorial Highway | Contributing |
| **10** | Lincoln Memorial Cultural Landscape | | NRHP cultural landscape |
| | | Spatial organization: axial relationship with the Mall, axial alignment of the Lincoln Memorial statue with the Approachway, Washington Monument, and U.S. Capitol, axiality of the Reflecting Pool, radial arrangement of central rond-point around Lincoln Memorial Circle, radial arrangement of secondary allées, descent of the Watergate plaza and steps to the Potomac River, location of monuments and memorials establishing the landscapes termini, layout of Ohio Drive SW and Parkway Drive NW along the western edge of the cultural landscape, parallel with the Potomac River shoreline, Open character of playing fields and turf panels between the radial roads and the parkway | Contributing |
| | | Land Use: Commemorative land use as a memorial landscape, dedicated to President Abraham Lincoln, John Ericsson, and Martin Luther King, Jr., Commemorative use as a memorial tree grove, dedicated to the individuals and organizations represented, a space of protest associated with the Civil Rights Movement and First Amendment causes, passive and active recreational use | Contributing |
| | | Topography: Generally flat topography consistent with the construction of East/West Potomac Parks via reclamation, Mounded (round point) topography within Lincoln Memorial Circle, Steeply sloped topography on the east and west sides of Lincoln Memorial Circle, descending to the Reflecting Pool and the Potomac River, Gently sloping topography from the Belvedere and Parkway Drive to 23rd Street NW, Steeply sloping abutments flanking the Parkway Drive and Arlington Memorial Bridge overpasses | Contributing |
| | | Vegetation: plantings in Lincoln Memorial Circle, elm allées and trees, turf island at Constitution Avenue Belvedere, turf panels along Reflecting Poll, in Lincoln Memorial Circle, and between radial roads and parkway, plantings along Watergate Steps area and approach road, remnant naturalistic groves of memorial trees | Contributing |

| Map ID | Resource Name | | NRHP Designation |
|---|---|---|---|
| | | Circulation: Lincoln Memorial Circle and associated concrete sidewalks, Parkway Drive NW and associated concrete sidewalks, 23rd Street NW/SW and associated concrete sidewalks, Henry Bacon Drive NW and associated concrete sidewalks, Daniel French Drive SW and concrete sidewalk on northeast side, Ohio Drive SW and associated concrete sidewalks, traffic circle and concrete sidewalks at the Belvedere, gravel service road to underground storage area, remnant bridle paths west of Lincoln Memorial Circle, primary, east-west asphalt allée paths, Secondary, north-south concrete paths at east end of Reflecting Pool, Paths and stairs between Reflecting Pool plaza and Lincoln Memorial Circle, Approachway, raised terrace stairs, and stylobate, Gravel walk around outer edge of raised terrace, Lincoln Memorial Circle former parking area, including granite block edging, Watergate Steps area concrete sidewalks, Concrete sidewalks around Ericsson Monument, Concrete sidewalk along south side of Constitution Avenue | Contributing |
| | | Potomac River seawall between Theodore Roosevelt Bridge and John Ericsson Monument | Contributing |
| **11** | | Lincoln Memorial statue and structure, including raised terrace, marble stylobate steps, and granite walls | Contributing/NRHP |
| | | John Ericsson Monument* and compass terrace | Contributing |
| | | Parkway Drive overpass, including integrated balustrades and benches | Contributing |
| | | Statuary on approach pedestals (Music and Harvest, and Aspiration and Literature) | Contributing |
| | | Underground storage area and retaining walls on Parkway Drive NW | Contributing |
| | | Watergate Steps including plaza wing walls, integrated balustrades and benches | Contributing |
| | | Constitution Avenue Belvedere | Contributing |
| | | Reflecting Pool | Contributing |
| | | Views and vistas: reciprocal views along and between contributing features, panoramic views from the Lincoln Memorial structure toward Watergate Steps, Arlington Memorial Bridge, Arlington House—The Robert E. Lee Memorial, and Parkway Drive, and framed views long Lincoln Memorial porticoes | Contributing |
| | | Small-scale features: granite benches at entrance to Approachway | Contributing |
| | | Small-scale features: cast-iron frame wooden slat benches, Alaska and Hawaii plaque, Martin Luther King Jr “I have a Dream” plaque, memorial tree plaques, Washington Standard lampposts, and Twin-20 lampposts. | Managed as cultural resource |
| **12** | National Mall Historic District | | NRHP historic district |
| | | Vistas/Views: views from Mall to Union Square; views to building facades from Mall; views up cross streets; vista Capitol to Washington Monument | Contributing |
| | | Circulation roads and walkways and small-scale features | Contributing |
| | | The Mall (Reservation Nos. 3, 3A, 3B, 4, 5, 6, and 6A) | Contributing site/NRHP |
| | | Reservation No. 553 | Contributing site |
| | | Reservation No. 201 | Contributing site |
| | | National Gallery of Art Sculpture Garden | Contributing site |
| | | President’s Park South | Contributing site |

| Map ID | Resource Name | | NRHP Designation |
|---|---|---|---|
| | | Ellipse | Contributing site |
| | | Washington Monument Grounds (Reservation No. 2) | Contributing site |
| | | Sylvan Theater | Contributing site |
| | | German-American Friendship Garden | Contributing site |
| | | West Potomac Park (Reservation No. 332) | Contributing site |
| | | Constitution Gardens | Contributing site |
| | | Vietnam Veterans Memorial | Contributing site |
| | | Lincoln Memorial grounds | Contributing site |
| | | District of Columbia War Memorial grounds | Contributing site |
| | | Korean War Veterans Memorial | Contributing site |
| **13** | | World War II Memorial | Contributing site |
| | | Thomas Jefferson Memorial grounds | Contributing site |
| | | Franklin Delano Roosevelt Memorial | Contributing site |
| | | George Mason Memorial | Contributing site |
| **14** | | Martin Luther King, Jr. Memorial | Contributing site/NRHP |
| | | Lock B Archeological Site | Contributing site |
| | | Lockkeeper's House Foundation Archeological Site | Contributing site |
| | | White House Stable Archeological Site | Contributing site |
| | | Tiber Creek Sewer Archeological Site | Contributing site |
| | | Smithsonian Institution Building | Contributing building |
| | | Arts and Industries Building | Contributing building |
| | | U.S. Department of Agriculture Administration Building | Contributing building |
| | | National Museum of Natural History | Contributing building |
| | | Freer Gallery of Art | Contributing building |
| | | National Gallery of Art West Building | Contributing building |
| | | National Museum of American History | Contributing building |
| | | Hirshhorn Museum and Sculpture Garden | Contributing building |
| | | National Air and Space Museum | Contributing building |

| Map ID | Resource Name | | NRHP Designation |
|---|---|---|---|
| | | National Gallery of Art East Building | Contributing building |
| | | Quadrangle | Contributing building |
| | | National Museum of the American Indian | Contributing building |
| | | Survey Lodge | Contributing building |
| | | Monument Lodge | Contributing building |
| | | National Museum of African American History and Culture | Contributing building |
| | | Constitution Gardens Refreshment Kiosk | Contributing building |
| **15** | | Lockkeeper's House | Contributing structure/NRHP |
| | | Bulfinch Gatehouses (U.S. Capitol Gatehouse) | Contributing structure |
| | | Bulfinch Gatepost (U.S. Capitol Gateposts) | Contributing structure |
| | | Washington Monument | Contributing structure/NRHP |
| | | Flood Control Levee | Contributing structure |
| | | Lincoln Memorial* | Contributing structure/NRHP |
| | | Reflecting Pool | Contributing structure |
| | | Watergate steps | Contributing structure |
| | | Constitution Avenue Belvedere | Contributing structure |
| | | District of Columbia War Memorial | Contributing structure |
| | | Stone Seawalls | Contributing structure |
| | | Tidal Basin | Contributing structure |
| | | Outlet Bridge | Contributing structure |
| | | Inlet Bridge | Contributing structure |
| | | Kutz Bridge | Contributing structure |
| | | Independence Avenue Extension | Contributing structure |
| | | Thomas Jefferson Memorial | Contributing structure/NRHP |
| | | Constitution Avenue, NW | Contributing structure |
| | | Madison Drive | Contributing structure |

| Map ID | Resource Name | | NRHP Designation |
|---|---|---|---|
| | | Jefferson Drive | Contributing structure |
| | | Maryland Avenue, SW | Contributing structure |
| | | Pennsylvania Avenue, NW | Contributing structure |
| | | Henry Bacon Drive | Contributing structure |
| | | Daniel French Drive | Contributing structure |
| | | Lincoln Circle | Contributing structure |
| | | Ohio Drive | Contributing structure |
| | | Terminus of the Rock Creek and Potomac Parkway | Contributing structure |
| | | 3rd Street, SW | Contributing structure |
| | | 4th Street, SW | Contributing structure |
| | | 7th Street, NW-SW | Contributing structure |
| | | 14th Street, NW-SW | Contributing structure |
| | | Raoul Wallenberg Place (15th Street south of Independence Avenue) | Contributing structure |
| | | 17th Street, NW | Contributing structure |
| | | 23rd Street, NW | Contributing structure |
| | | E Street, NW | Contributing structure |
| | | Downing Urn | Contributing object |
| | | Joseph Henry Memorial | Contributing object |
| | | National Grange Marker | Contributing object |
| | | Ellipse Meridian Stone | Contributing object |
| | | General William Tecumseh Sherman Memorial | Contributing object |
| | | Butt-Millet Memorial Fountain | Contributing object |
| | | Zero Milestone | Contributing object |
| | | First Division Monument | Contributing object |
| | | Original Patentees of the District of Columbia Memorial | Contributing object |
| | | Second Division Memorial | Contributing object |
| | | Boy Scout Commemorative Tribute | Contributing object |
| | | John Saul Plaque | Contributing object |

| Map ID | Resource Name | | NRHP Designation |
|---|---|---|---|
| | | National Christmas Tree Plaque | Contributing object |
| | | Jefferson Pier | Contributing object |
| | | Elevation Obelisk | Contributing object |
| | | 100th Anniversary Plaques | Contributing object |
| | | Washington City Canal Memorial Stone and Plaque | Contributing object |
| **16** | | Memorial to the 56 Signers of the Declaration of Independence | Contributing object/NRHP |
| | | John Ericsson Monument | Contributing object |
| | | *The Arts of Peace: Aspiration and Literature* | Contributing object |
| | | *The Arts of Peace: Music and Harvest* | Contributing object |
| | | *The Arts of War: Sacrifice* | Contributing object |
| | | *The Arts of War: Valor* | Contributing object |
| | | First Airmail Flight Marker | Contributing object |
| | | Number 4 Fountain | Contributing object |
| | | Commodore John Paul Jones Statue | Contributing object |
| | | First Cherry Tree Planting Plaque | Contributing object |
| | | Japanese Lantern | Contributing object |
| | | Japanese Pagoda | Contributing object |
| | | Cuban Friendship Urn | Contributing object/NRHP |
| **17** | The Mall Cultural Landscape | | NRHP cultural landscape |
| | | Vegetation: grass panels, elm tree panels, Ulmus americana planted 1920s-1975, Ulmus americana cultivars replacement of the original elms | Contributing |
| | | Circulation: Jefferson Drive, Madison Drive, 3rd Street, 4th Street, 7th Street, 14th Street, North Vista Walk (formerly Washington Drive), South Vista Walk (formerly Adams Drive), sidewalks along Madison and Jefferson Drives, walk along 5th Street axis, walk along 6th Street axis, walk along 8th Street axis, walk along 9th Street axis, walk along 10th Street axis, walk along 12th Street axis, walk along 13th Street axis | Contributing |
| | | Views and vistas: vista from the Capitol to Washington Monument, views from Mall to Union Square, views to building facades from Mall, views to elms from walks and grass panels, views up cross streets | Contributing |
| | | Small-scale features: benches (1930s design for NCP) and streetlights (1930s design for Mall) | Contributing |

| Map ID | Resource Name | | NRHP Designation |
|---|---|---|---|
| **18** | Washington Monument and Grounds Historic District | | NRHP historic district |
| | | Views and vistas: Axial views through Jefferson Pier of the White House and Thomas Jefferson Memorial; Views from the site to the Lincoln Memorial, White House, Thomas Jefferson Memorial, and the U.S. Capitol; Views from top of Monument to the surrounding city and important sites | Contributing |
| | | Circulation roads and walkways, vegetation, and small-scale features | Contributing |
| | | Monument Lodge | Contributing building |
| | | Survey Lodge/Boiler House | Contributing building |
| | | Washington Monument Grounds cultural landscape | Contributing site |
| | | German-American Friendship Garden | Contributing site |
| | | Sylvan Theater | Contributing site |
| | | Washington Monument | Contributing structure/NRHP |
| | | Bulfinch Gateposts (2) (U.S. Capitol Gateposts) | Contributing structure |
| | | Raoul Wallenberg Place (15th Street south of Independence Avenue) | Contributing structure |
| | | Independence Avenue corridor (including Maine Avenue corridor) | Contributing structure |
| | | Tidal Basin Parking Lot Corridor | Contributing structure |
| | | Tidal Basin Walk with metal pipe handrail – near Tidal Basin Parking Lot | Contributing structure |
| | | Survey Lodge service drive | Contributing structure |
| | | 100th Anniversary Plaques (2) | Contributing object |
| | | Benches – cast-iron-and-wood slat at perimeter of site (1 group) | Contributing object |
| | | Cobblestone gutters along Survey Lodge service drive (1 group) | Contributing object |
| | | Washington Globe lights along the service drive behind the Survey Lodge (1 group) | Contributing object |
| | | Twin-20 streetlights along Independence and Maine Avenues (1 group) | Contributing object |
| | | Ring of 50 aluminum flagpoles (1 group) | Contributing object |
| | | Jefferson Pier Marker | Contributing object |
| | | Elevation Obelisk | Contributing object |
| **19** | Washington Monument Grounds Cultural Landscape | | NRHP cultural landscape |

| Map ID | Resource Name | | NRHP Designation |
|---|---|---|---|
| | | Vegetation: Street Trees along Tidal Basin Parking; Lawn; Mulberry Tree; Street Trees along 17th Street, Constitution Avenue, 14th Street; Cherry Groves along Tidal Basin; Open Groves; Elm tree along Raoul Wallenberg Place; Elms along Tidal Basin Parking Lot; Elm in southwest grove near Survey Lodge; Catalpa tree behind Survey Lodge; and Large Elm along Tidal Basin near intersection of Raoul Wallenberg and Maine Avenue | Contributing |
| | | Circulation: 17th Street corridor, including sidewalks; Constitution Avenue corridor, including sidewalks; 14th Street corridor, including sidewalks; Independence and Maine Avenue corridors; Tidal Basin Parking Lot corridor; Tidal Basin walk; Raoul Wallenberg Place corridor; Flagstone steps at the Sylvan Theater | Contributing |
| | | Washington Monument | Contributing/NRHP |
| | | Monument Lodge | Contributing |
| | | Survey Lodge | Contributing |
| | | Jefferson Pier survey marker | Contributing |
| | | Bulfinch gateposts (U.S. Capitol Gateposts) | Contributing/NRHP |
| | | Independence Avenue Overpass | Contributing |
| | | Seawall | Contributing |
| | | Views and vistas: Views from D.C. and surrounding region to Monument, Views from top of Monument to the surrounding city and important sites, Views from the site to the Lincoln Memorial, White House, Thomas Jefferson Memorial, and the U.S. Capitol, Vistas of the Monument from Lincoln Memorial, White House, Thomas Jefferson Memorial, and the U.S. Capitol, Axial views through Jefferson Pier of the White House and Thomas Jefferson Memorial, Screened views of the site features | Contributing |
| | | Small-scale features: Elevation Obelisk, Twin-20 double lamp streetlights, Washington Globe single lamp streetlights, Cast-iron and wood slat benches, Ring of flagpoles, Dedication plaque at monument base, Stone-lined drainage ditch at Survey Lodge Service Drive, and Pipe Handrail - Tidal Basin | Contributing |
| **20** | Civil War Monuments in Washington, D.C. | Inclusive of Ulysses S. Grant Memorial | NRHP |
| **21** | Rock Creek Park and Potomac Parkway Historic District | | NRHP historic district |
| | | Spatial organization: the linear arrangement of the parkway including component roads, pedestrian circulation, open spaces, etc. from north to south; the linear arrangement of the seawall, shared use trail and lawn, parkway roadway proper, and lawn from west to east | Contributing |
| | | Land use as a link connecting Rock Creek Park to West Potomac Park, as a commuter roadway, and a recreational area | Contributing |
| | | Circulation: Rock Creek Potomac Parkway roadway; Pedestrian path to the west of the parkway, between Virginia Avenue, N.W., and F Street, N.W.; Kennedy Center Promenade; granite block median and shoulder; and granite curbs | Contributing |
| | | Topography: human-made site, with a gentle slope rolling downwards from the adjacent properties to the east toward the Potomac River seawall | Contributing |

| Map ID | Resource Name | | NRHP Designation |
|---|---|---|---|
| | | Vegetation: Sycamore Allée, ca. 1936 vegetation, ca. 1966 vegetation, medium to large specimen trees, trees adjacent to the Roosevelt bridge | Contributing |
| | | Stone seawall along the Potomac Waterfront Section of the Rock Creek Potomac Parkway | Contributing |
| | | The Belvedere (Constitution Avenue, N.W.) | Contributing |
| | | Retaining walls and rip rap along the banks of the Rock Creek | Contributing |
| | | Kennedy Center Stone Retaining Wall | Contributing |
| | | Aluminum handrail along the promenade and integrated bench seat to the east of the promenade | |
| | | Views and vistas from the parkway to the surrounding environs, including the Potomac River, Theodore Roosevelt Island, Georgetown and Key Bridge, Arlington Memorial Bridge, Virginia, shoreline, and West Potomac Park. | Contributing |
| | | Twin-20 Lampposts at the Belvedere | Contributing |
| **22** | East and West Potomac Park Historic District | | |
| | | Views and Vistas from locations: Tidal Basin; Tidal Basin Inlet Bridge; Tidal Basin Outlet Bridge; Potomac River Seawall; Commodore John Paul Jones Statue; Cuban Friendship Urn; Franklin Delano Roosevelt Memorial; Korean War Veterans Memorial; Martin Luther King, Jr. Memorial; World War II Memorial; Franklin Delano Roosevelt Memorial Visitor Center; Martin Luther King, Jr. Memorial Visitor Center; World War II Memorial Restrooms; World War II Memorial Visitor Center; East Basin Drive Bridge. | |
| | | Lockkeeper's House | Contributing/NRHP |
| | | Stone Seawalls | Contributing |
| | | Tidal Basin | Contributing |
| | | Tidal Reservoir Outlet Bridge | Contributing |
| | | Commodore John Paul Jones Statue | Contributing |
| | | Japanese Cherry Trees | Contributing |
| | | Lincoln Memorial | Contributing/NRHP |
| | | Dutch Elm Trees | Contributing |
| | | Reflecting Pool | Contributing |
| | | Lincoln Memorial Grounds | Contributing |
| | | John Ericsson Monument | Contributing |
| | | Arlington Memorial Bridge | Contributing/NRHP |
| | | District of Columbia World War I Memorial | Contributing |
| | | Flood Control Levee | Contributing |

| Map ID | Resource Name | | NRHP Designation |
|---|---|---|---|
| | | Jefferson Memorial | Contributing |
| | | Independence Avenue Extension | Contributing |
| | | Jefferson Memorial Grounds | Contributing |
| | | Kutz Bridge | Contributing |
| | | Guard House | Contributing |
| | | Japanese Lantern | Contributing |
| | | Japanese Pagoda | Contributing |
| | | Constitution Gardens | Contributing |
| | | 56 Signers Memorial | Contributing/NRHP |
| | | Vietnam Veterans Memorial | Contributing |
| | | Vietnam Women's Memorial | Contributing |
| | | Franklin Delano Roosevelt Memorial | Contributing/NRHP |
| | | Korean War Veterans Memorial | Contributing |
| | | Stone Seawalls | Contributing |
| | | Potomac Railroad Bridge | Contributing |
| | | Ohio Drive, SW | Contributing |
| | | U.S. Engineers' Storehouse | Contributing |
| | | East Potomac Park Field House | Contributing |
| | | East Potomac Park Golf Course | Contributing |
| | | East Potomac Park Miniature Golf Course | Contributing |
| | | East Potomac Park Swimming Pool | Contributing |
| **23** | American Revolutionary Statuary in the District of Columbia | Inclusive of Commodore John Paul Jones Statue | NRHP |

Sources: Army National Military Cemeteries and Virginia State Historic Preservation Officer (2026); Arlington National Cemetery et al. (n.d. [2026]); Bobeczko and Robinson (1998); Dillon (1972); EDAW, Inc. (1992a, 1992b); EHT Traceries, Inc. and Stantec (2018); Frisbie et al. (2024); Krakow (1993); McIntosh (1979, 1980a, 1980b); National Park Service (2004, 2005, 2006a, 2006b, 2009a, 2009b, 2015, 2016, 2018a, 2018b, 2022a, 2022b, 2024); Pfanz (1980, 1981); Robinson et al. (2016); Scott (1977); Seagraves et al. (1980); Smith et al. (2013); Virginia Polytechnic Institute and State University (2009).

NHL: National Historic Landmark; NRHP: Designated Lised/Eligible for the National Register of Historic Places.

**Table 2. Historic Properties within the Area of Indirect Effects**

| Map ID | Resource Name | NRHP Designation | Contributing Views/Vistas |
|---|---|---|---|
| **24** | Mount Vernon Memorial Highway Cultural Landscape – North of Alexandria | NRHP | Views and Vistas: Northbound vista of the Washington Monument; Northbound views of the Potomac; Views of the U.S. Capitol Building Northbound vista of the Washington Monument; Southbound view of the Roaches Run lagoon. |
| **25** | Cuban Friendship Urn | NRHP | Located in West Potomac Park with views of the Potomac River. |
| **26** | FDR Memorial | NRHP | Views from memorial to the Tidal Basin. View from Eleanor Roosevelt statue to the White House. |
| **27** | Arlington Ridge Park | NRHP | Views and Vistas: view along Ridge Path to Netherlands Carillon; view from Marine Corps War Memorial to parade ground; view from Netherlands Carillon to flower beds below; view from Netherlands Carillon to Mall; view from reviewing stand to parade ground, and across parade ground to Marine Corps War Memorial; view from U.S. Marine Corps War Memorial to Lincoln Memorial, Watergate Steps, and National Mall; views along entrance drive into park; views along pedestrian walks to Marine Corps Memorial statue; views along Ridge Path and from Netherlands Carillon grounds to National Mall; views from park to Arlington National Cemetery. |
| **28** | Pentagon | NHL/NRHP | View/vista: view of Arlington National Cemetery, vistas of the Monumental Core of Washington D.C., across the Potomac, clear views of Washington from Arlington National Cemetery, and vice versa. |
| **29** | Fort Myer Historic District | NHL/NRHP | Views toward Washington D.C, Arlington Cemetery; the Pentagon; Potomac River. |
| **30** | Quarters 1 | NHL/NRHP | Views toward Washington D.C, Arlington Cemetery; the Pentagon. |
| **31** | Theodore Roosevelt Island Historic District | NRHP | Views to and from the memorial plaza and statue. |
| **32** | Theodore Roosevelt Island Cultural Landscape | NRHP | Views and Vistas: Internal views within and across memorial plaza. |
| **33** | Washington Canoe Club | NRHP | Views and Vistas: Views from north of the Washington Canoe Club (WCC) boathouse toward the Chesapeake & Ohio Canal (C&O Canal) and Georgetown; Views from the aqueduct's northern abutment toward the Potomac River, the WCC, the C&O Canal, Georgetown, the Potomac Boat Club, and Key Bridge; Views from the C&O Canal toward the Potomac River, the WCC boathouse, and the aqueduct's northern abutment; Views from the WCC boathouse's façade toward the Virginia shore, Key Bridge, and Three Sisters Islands; Vista along the C&O Canal. |
| **34** | George Mason Memorial | NRHP | Views and Vistas: Inward views of the George Mason Memorial; vista from the George Mason Memorial Sculpture to the Inlet Bridge. |
| **35** | Thomas Jefferson Memorial | NRHP | Views and Vista to and from to the Thomas Jefferson statue to the Tidal Basin and White House and Washington Monument. |
| **36** | Thomas Jefferson Memorial Cultural Landscape | NRHP | Views and vistas: View across Tidal Basin to Cherry Trees; view south to Interstate 395 and 14th Street Bridge; View West to Potomac River past Franklin Delano Roosevelt Memorial; Vista North to White House and Washington Monument; Vista to Lincoln Memorial; Vistas to East and West of Memorial. |
| **37** | DC War Memorial Cultural Landscape | NRHP | Views and Vistas: View looking north of the Reflecting Pool; View looking south of the Tidal Basin. |
| **38** | United States Capitol | NHL/NRHP | Views/vistas of the National Mall, the Tidal Pool, the Washington Monument; and other adjacent resources. Axial views up Pennsylvania Avenue NW and SE. Views to Union Station. |

| Map ID | Resource Name | NRHP Designation | Contributing Views/Vistas |
|---|---|---|---|
| **39** | U.S. Capitol Gatehouses and Gateposts | NRHP | No contributing views. Gateposts flank 15th Street and Constitution Avenue, NW in Washington Monument Grounds and President's Park. Gatehouse in SE corner of President's P*ark.* |
| **40** | Smithsonian Building | NHL/NRHP | Views/vistas of the National Mall, within the National Mall. Views of the Potomac River from the waterfront. |
| **41** | Georgetown Historic District | NHL/NRHP | Views/vistas of Rock Creek and Potomac Parkway. |
| **42** | Old Navy Observatory | NHL/NRHP | View of the Potomac River below Theodore Roosevelt Island, including Memorial Bridge, Arlington Cemetery, and Arlington House; view over Theodore Roosevelt Island and the Georgetown waterfront, including Key Bridge; view over West Potomac Park and the Lincoln Memorial. |
| **43** | Pennsylvania Avenue National Historic Site | NRHP | Contributing resources include Old Post Office and Clock Tower. Views and vistas of the Pennsylvania Avenue National Historic Site. |

Sources: Army National Military Cemeteries and Virginia State Historic Preservation Officer (2026); Arlington National Cemetery et al. (n.d. [2026]); Bobeczko and Robinson (1998); Dillon (1972); EDAW, Inc. (1992a, 1992b); EHT Traceries, Inc. and Stantec (2018); Frisbie et al. (2024); Krakow (1993); McIntosh (1979, 1980a, 1980b); National Park Service (2004, 2005, 2006a, 2006b, 2009a, 2009b, 2015, 2016, 2018a, 2018b, 2022a, 2022b, 2024); Pfanz (1980, 1981); Robinson et al. (2016); Seagraves et al. (1980); Scott (1977); Smith et al. (2013); Virginia Polytechnic Institute and State University (2009).

NRHP = Designated listed/eligible for the National Register of Historic Places; NHL = National Historic Landmark.

**Table 3. Assessment of Adverse Effects**

| Resource Name | Criteria of Significance | Indirect Effects | Direct Effects | Summary of Adverse Effects |
|---|---|---|---|---|
| Memorial Avenue Corridor Cultural Landscape | A, B, C, D, F, G | The proposed undertaking may adversely affect the corridor's setting, context and viewshed, including the obstruction of distant views that characterize the historic resource, and which serve as a defining feature of the corridor, including: the view of the Washington Monument from various locations along the corridor; view to Hemicycle and Arlington House; view to Lincoln Memorial; and views to the Capitol dome and other resources of the D.C. monumental core from Memorial Circle. | Memorial Avenue corridor is architecturally significant as a mile-long axial composition. Memorial Circle is the one portion of the Memorial Avenue composition that was not designed by McKim Mead and White architectural firm; the circle is attributed to Gilmore Clarke, an early designer of the American Parkway. With the proposed undertaking, the corridor would be physically altered with an intrusion that changes the circulation patterns, and contributing viewsheds, and modifies the design continuity of the corridor. The corridor is identified as meeting moderate rather than high integrity, although its primary architectural features are identified as retaining high integrity. With the proposed undertaking, these architectural resources may be adversely affected. In addition, the proposed undertaking may result in the loss of contributing landscape elements The pines at the four pylons near Memorial Circle are identified as contributing to the cultural landscape and may be adversely affected. The granite block paving surfaces, along the bridges as well as appearing in triangular islands to the east and west of Memorial Circle, are also contributing elements and should be retained. | The proposed undertaking would introduce adverse direct and indirect effects. |

| Resource Name | Criteria of Significance | Indirect Effects | Direct Effects | Summary of Adverse Effects |
|---|---|---|---|---|
| Arlington Memorial Bridge and Associated Features | C | Views from the resource and to the resource, as well as the bridge's immediate setting would be altered. | The Arlington Memorial Bridge historic resource encompasses architectural, landscape, and sculptural features to the east and west, including Memorial Circle. The bridge and associated features serve as a symbolic linkage of the North and South by connecting the Lincoln Memorial and Arlington House. With the proposed undertaking, this balanced architectural relationship would be altered and the visual continuity would be obstructed. The sculptural and landscape elements that define Memorial Circle, including two sets of 35-foot-tall granite pylons and the circulation pattern, circular lawn and annual floral plantings, would be removed or diminished. The design continuity of Memorial Drive is also a contributing element of the resource. | The proposed undertaking would result in adverse direct and indirect effects. |
| Lady Bird Johnson Park Cultural Landscape | A, C | The proposed undertaking would physically obstruct contributing views within the landscape and along Arlington Memorial Bridge, and it would alter views to resources such as Arlington House, Lincoln Memorial, the Potomac River, and Arlington Memorial Bridge. | The island's significance is tied to its central role in the axial composition linking the Lincoln Memorial with the entrance to Arlington National Cemetery. The main axis of Arlington Memorial Bridge, Memorial Cricle, and Boundary Channel Extension bridge are as originally built, with medium integrity, and are significant for their design as well as their association with the history of the American parkway. The proposed undertaking would directly affect the circulation of Memorial Circle, a contributing resource of the cultural landscape. Anticipated construction staging is planned for a portion of the Park, which may have a direct effect on contributing vegetation. | The proposed undertaking would result in adverse direct and indirect effects. |

| Resource Name | Criteria of Significance | Indirect Effects | Direct Effects | Summary of Adverse Effects |
|---|---|---|---|---|
| Arlington National Cemetery Historic District | A, B, C, D, F, G | The proposed undertaking would alter and partially obstruct contributing views from Arlington House and Kennedy Gravesite to Lincoln Memorial and Washington Monument. The undertaking would also alter contributing views to and from Memorial Amphitheater from various locations. The proposed undertaking would alter contributing views of ANC from the Lincoln Memorial, Memorial Bridge, Memorial Drive. | The proposed undertaking would result in direct effects to contributing resources in the Arlington National Cemetery Historic District, including circulation system resources that are identified as contributing to the historic district and contributing monuments adjacent to the proposed site. Direct effects from the proposed undertaking would also result from the partial obstruction of the resource's visual relationship with Lincoln Memorial and the Memorial Avenue Corridor. The axial relationship of the historic property to other major monuments is integral to its historic significance. | The proposed undertaking would result in adverse direct and indirect effects. |
| Arlington House Historic District | A, B, C, D | The proposed undertaking would alter contributing views east from Arlington House. There is potential that the proposed undertaking would partially obstruct views of Lincoln Memorial and Arlington Memorial Bridge from Arlington House. | Arlington House is oriented with long views toward Washington D.C. This relationship to Washington D.C. and the Potomac is a character-defining feature of the resource. Contributing resources in the historic district also derive significance from their orientation and views toward the Potomac River and Washington D.C. | The proposed undertaking would result in adverse direct and indirect effects. |
| Arlington House (Robert E. Lee Memorial) | A, B, C, D | The proposed undertaking has the potential to alter contributing views. The proposed undertaking would alter contributing views east from Arlington House. There is potential that the proposed undertaking would alter views of Lincoln Memorial and Arlington Memorial Bridge from Arlington House. | Direct effects from the proposed undertaking would result from the property's partial obstruction from its relation to the Lincoln Memorial and the Memorial Avenue Corridor, a symbolic spatial relationship. | The proposed undertaking would result in adverse direct and indirect effects. |
| Arlington House Cultural Landscape | A, B, C, D, F | The proposed undertaking would alter contributing views from and to the resource, including the view between the house and Washington D.C. | Due to the changes to contributing views and vistas, the proposed undertaking would present a direct adverse effect to the cultural landscape. | The proposed undertaking would result in adverse direct and indirect effects. |
| Lyndon B. Johnson Memorial Grove | A, C | Primary views from the resource are generally eastward across the Potomac River and views of the undertaking would therefore not be prominent or direct but may have indirect effects on the setting. | The proposed undertaking would be physically distinct from the historic resource and would not introduce a direct adverse effect. | The proposed undertaking may result in adverse indirect effects. |

| Resource Name | Criteria of Significance | Indirect Effects | Direct Effects | Summary of Adverse Effects |
|---|---|---|---|---|
| Mount Vernon Memorial Highway Historic District | A, C | The resource's setting would be changed with the proposed undertaking. | The proposed undertaking would occupy the northern terminus of the resource, altering circulation patterns in this designed landscape. | The proposed undertaking would result in adverse indirect and direct effects. |
| Lincoln Memorial Cultural Landscape | A, C | The setting and context of the cultural landscape may be adversely affected by the loss of contributing vistas as well as the altered character of the landscape and built environment in westward views from the Lincoln Memorial grounds. | The proposed undertaking may result in a direct adverse effect to the reciprocal views between the Lincoln Memorial and Arlington House, which are identified as a contributing resource in the cultural landscape. | The proposed undertaking would result in adverse indirect and direct effects. |
| Lincoln Memorial | A, B, C, | The Lincoln Memorial west façade is oriented toward the proposed undertaking. . Views across the river would therefore be altered by the proposed undertaking. | The resource is significant for its architectural design, as a major element of the McMillan Commission Plan to form the western terminus of the Mall composition and as the northeastern terminus of an axis that extends across the Arlington Memorial Bridge to Arlington House. The proposed undertaking may result in a direct adverse effect to the Lincoln Memorial as it would change the interrelationships of the existing monumental landscape, which forms an intentional balance between natural and built features, axial and picturesque landscape elements. | The proposed undertaking would result in adverse indirect and direct effects. |
| National Mall Site and National Mall Historic District | A, C, D, F | The character of views of the Potomac River would be altered with the proposed undertaking, as the proposed undertaking introduces a feature that is dissimilar to its surroundings on the west side of the river. | The resource includes grounds and memorials that derive significance from their distant views, with designs and orientations that rely on direct views of civic monuments. | The proposed undertaking would result in adverse indirect and direct effects. |
| The Mall Cultural Landscape | A, B, C | The character of views of the Potomac River would be altered with the proposed undertaking, as the proposed undertaking introduces a feature that is dissimilar to its surroundings on the west side of the river. | The resource includes grounds and memorials that derive significance from their distant views, with designs and orientations that rely on direct views of civic monuments. | The proposed undertaking would result in adverse indirect and direct effects. |
| World War II Memorial | F, G | The proposed undertaking would not adversely affect the resource's contributing views, due to distance, and intervening vegetation and buildings. | No direct effects | No adverse effect is anticipated. |

| Resource Name | Criteria of Significance | Indirect Effects | Direct Effects | Summary of Adverse Effects |
|---|---|---|---|---|
| Martin Luther King Jr. Memorial | F, G | The proposed undertaking would not adversely affect the resource's contributing views, due to distance, and intervening vegetation and buildings. Primary views from the memorial are southeast to the Jefferson Memorial. The undertaking would therefore not be prominent or direct. | No direct effects | No adverse effect is anticipated. |
| Lockkeeper's House and C&O Extension | A, C | The resource is located on the south side of Constitution Avenue, situated with its primary elevation oriented north and away from the proposed undertaking. | No direct effects | No adverse effect is anticipated. |
| 56 Signers Memorial | F, G | No indirect effects | No direct effects | No adverse effect is anticipated. |
| Washington Monument Structure and Washington Monument and Grounds Historic District | A, C, B, F, G | Views from the top of the monument are a contributing resource and would be altered with the proposed undertaking. The grounds and base of the monument would not include direct and prominent views of the proposed undertaking due to distance and intervening vegetation and topography. | No direct effects. | The proposed undertaking would result in adverse indirect effects. |
| Washington Monument and Grounds Cultural Landscape | A, C, F | The context and setting of the resource would not be adversely affected by the proposed undertaking, due to distance and intervening vegetation and buildings. | Views to the monument are identified as a contributing resource; these views would be altered and obstructed by the proposed undertaking, resulting in a direct adverse effect to the cultural landscape. | The proposed undertaking would result in adverse direct effects. |
| Rock Creek and Potomac Parkway Historic District | A, C | Views southwest toward Memorial Bridge are a contributing resource in the Historic District and would be altered with the proposed undertaking. | No direct effects. | The proposed undertaking would result in adverse indirect effects. |
| Civil War Monuments in Washington, D.C. | A, C | Civil War Monuments include the Ulysses S, Grant Statue Views west along the primary mall axis from the front of the Grant Statue near the U.S. Capitol would encompass the proposed undertaking across the Potomac River. However, the proposed undertaking would not diminish the resource's immediate setting and primary views to the National Mall. | No direct effects | No adverse effect is anticipated. |

| Resource Name | Criteria of Significance | Indirect Effects | Direct Effects | Summary of Adverse Effects |
|---|---|---|---|---|
| East and West Potomac Park Historic District | A, B, C, F, G | Contributing views from the resource are generally oriented toward the Tidal Basin as well as vistas from built resources within the parks. The West Potomac Park riverfront would have direct views of the proposed undertaking. Views across the river would therefore be adversely changed by the proposed undertaking. | No direct effects | The proposed undertaking would result in adverse indirect effects. |
| American Revolutionary Statuary in the District of Columbia | A, C | One resource includes the John Paul Jones Memorial. Due to the distance of this resource from the proposed undertaking site, and the diminished visibility, this resource would not experience adverse indirect effects. | No direct effects | No adverse effect is anticipated. |
| Mount Vernon Memorial Highway Cultural Landscape - North of Alexandria | C | The resource's setting would not be changed with the proposed undertaking. | No direct effects | No adverse effect is anticipated. |
| Cuban Friendship Urn | B, C | The resource would not be adversely affected by changes to its distant viewshed. | No direct effects | No adverse effect is anticipated. |
| FDR Memorial | F, G | The resource is oriented primarily toward the Tidal Basin, away from the site of the proposed undertaking. | No direct effects | No adverse effect is anticipated. |
| Arlington Ridge Park | A, C, F, G | Situated on a ridge with long views across the Potomac River, to the monumental core, the park's southeastern views may include the proposed undertaking. | No direct effects | The proposed undertaking would result in adverse indirect effects. |

| Resource Name | Criteria of Significance | Indirect Effects | Direct Effects | Summary of Adverse Effects |
|---|---|---|---|---|
| Pentagon | A, B, C | It is anticipated that contributing views, including the views to and from Washington D.C., may be adversely affected with the proposed undertaking. The proposed undertaking would not adversely affect the resource's setting and context, due to distance and the existence of intervening roadway infrastructure. | The northeastern and eastern facades of the Pentagon are designed to capture unobstructed vistas of Washington D.C.'s Monumental Core across the Potomac River, with large terraces including the River Entrance Terrace and Mall Entrance Terrace, the parade ground, and landscaping that are designed to interface with these views. The proposed undertaking would be constructed within this contributing viewshed and there is a potential the proposed undertaking would result in direct adverse effects to the architectural resource | It is anticipated that the proposed undertaking may result in adverse direct and indirect adverse effects, due to visibility. |
| Fort Myer Historic District and Quarters 1 | A | The proposed undertaking would likely not be prominently visible from the resource, due to differentiation in elevation and intervening tree cover. However, the undertaking may be visible in some conditions. | No direct effects | The proposed undertaking would result in adverse indirect effects. |
| Theodore Roosevelt Island | A, C, D, F | The island is characterized by thick vegetation, and with the Theodore Roosevelt Memorial bridge intervening between the site and proposed undertaking. | No direct effects | No adverse effect is anticipated. |
| Washington Canoe Club | A, C | The resource is located at a substantial distance from the proposed undertaking; the resource's waterfront setting and views may include distant views of the proposed undertaking however it would not adversely affect the resource's setting, context, and relation to the waterfront. | No direct effects | No adverse effect is anticipated. |
| George Mason Memorial | A, F | Contributing view from the George Mason Memorial Sculpture to the Inlet Bridge. In leaf off condition, the proposed undertaking would potentially be visible. | No direct effects | The proposed undertaking would result in adverse indirect effects. |

| Resource Name | Criteria of Significance | Indirect Effects | Direct Effects | Summary of Adverse Effects |
|---|---|---|---|---|
| Thomas Jefferson Memorial | A, C, F | The resource is oriented toward the Tidal Basin with primary views north, away from the proposed undertaking. It is anticipated that the vegetation bordering the Tidal Basin would obscure direct views to the proposed undertaking, and the distance across the Potomac River would diminish the undertaking's effect on the resource's context and setting. | No direct effects | No adverse effect is anticipated. |
| Thomas Jefferson Memorial Cultural Landscape | A, C | Contributing views from the cultural landscape include views to the east and west of the Lincoln Memorial. It is anticipated that the proposed undertaking would be situated within this vista. | No direct effects | The proposed undertaking would result in adverse indirect effects. |
| DC War Memorial Cultural Landscape | A, F | The resource is within a park setting of mature trees that largely block long views to the west. | No direct effects | No adverse effect is anticipated. |
| United States Capitol | A, C | The proposed undertaking would not adversely affect the resource's contributing views, due to distance, and intervening vegetation and buildings. | No direct effects | No adverse effect is anticipated. |
| U.S. Capitol Gatehouses and Gateposts | C | The proposed undertaking would not adversely affect the resource's contributing views, due to distance, and intervening vegetation and buildings. | No direct effects | No adverse effect is anticipated. |
| Smithsonian Building | A, C | The proposed undertaking would not adversely affect the resource's contributing views, due to distance, and intervening vegetation and buildings. | No direct effects | No adverse effect is anticipated. |
| Georgetown Historic District | A, C, D | The proposed undertaking would not adversely affect the resource's contributing views, due to distance, and intervening vegetation and buildings. | No direct effects | No adverse effect is anticipated. |
| Old Navy Observatory | A, B, C | Views from the Old Navy Observatory may include the upper portion of the proposed undertaking. However, it is not anticipated that the proposed undertaking would substantially alter the resource's general setting or views. | No direct effects | No adverse effect is anticipated. |

| Resource Name | Criteria of Significance | Indirect Effects | Direct Effects | Summary of Adverse Effects |
|---|---|---|---|---|
| Pennsylvania Avenue National Historic Site (Old Post Office and Clock Tower) | A, C | The proposed undertaking would not adversely affect the resource's significance views, due to the property's orientation and primary views as well as its distance from the proposed undertaking. Distant views of the resource from the west would not be adversely affected. | No direct effects | No adverse effect is anticipated. |

## LITERATURE CITED


Army National Military Cemeteries and Virginia State Historic Preservation Officer. 2026. *Programmatic Agreement Among Army National Military Cemeteries and the Virginia State Historic Preservation Officer Regarding Entry Corridor Area Improvements Arlington National Cemetery, Arlington County, Virginia*. On file, Virginia Department of Historic Resources, Richmond.

Arlington National Cemetery, Virginia State Historic Preservation Officer, and Advisory Council On Historic Preservation. n.d. [2026]. Attachments C and E in *Programmatic Agreement among Arlington National Cemetery, the Virginia State Historic Preservation Officer, and the Advisory Council on Historic Preservation for the Operation, Maintenance, And Repair Activities At Arlington National Cemetery, Arlington County, Virginia*. On file, Virginia Department of Historic Resources, Richmond.

Bobeczko, Laura L. Judith H. Robinson. 1998. National Register of Historic Places Registration Form for East and West Potomac Parks Historic District. On file, Robinson & Associates, Washington, D.C.

Dillon, Helen. 1972. National Register of Historic Places Inventory – Nomination Form for Lockkeeper's House, C & O Canal Extension. On file, Robinson & Associates, Washington, D.C.

EDAW, Inc. 1992a. *Cultural Landscape Report Mount Vernon Memorial Highway.* Volume One: History. Prepared for National Park Service, National Capital Region. Alexandria, Virginia: EDAW, Inc.

EDAW, Inc. 1992b. *Cultural Landscape Report Mount Vernon Memorial Highway.* Appendix H: Monthly Construction Reports. Prepared for National Park Service, National Capital Region. Alexandria, Virginia: EDAW, Inc.

EHT Traceries, Inc. and Stantec. 2018. *Cultural Landscape Report Rock Creek and Potomac Parkway Potomac Waterfront Section*. Prepared for National Park Service, National Mall and Memorial Parks, Division of Resource Management Washington, D.C.

Frisbie, Meg, Molly Lester, Chen Mao, Ruth Penberthy, Haoyi Shang, Zhijie Wang, and Ryan Drake. 2024. *Memorial Avenue Corridor, George Washtingon Memorial Parkway, Cultural Landscape Report*. Philadelphia: University of Pennsylvania - Weitzman School of Design, Urban Heritage Project.

Krakow, Jere, L. 1993. National Register of Historic Places Inventory Registration Form for George Washington Memorial Parkway. On file, National Park Service, Denver Service Center, Colorado.

Mckintosh, Barry. 1979. National Register of Historic Places Inventory – Nomination Form for Arlington Memorial Bridge. On file, National Park Service, National Capital Region, Washington, D.C.

Mckintosh, Barry. 1980a. National Register of Historic Places Inventory – Nomination Form for Mount Vernon Memorial Highway, Geoge Washington Memorial Parkway. On file, National Park Service, National Capital Region, Washington, D.C.

Mckintosh, Barry. 1980b. National Register of Historic Places Inventory – Nomination Form for Mount Vernon Memorial Highway, Geoge Washington Memorial Parkway (portion). On file, National Park Service, National Capital Region, Washington, D.C.

National Park Service. 2004. *National Park Service Cultural Landscapes Inventory, Memorial Avenue Corridor George Washington Memorial Parkway – Memorial Avenue.* Washington, D.C.: National Park Service, Park Cultural Landscapes Program.

National Park Service. 2005. *National Park Service Cultural Landscapes Inventory, Lady Bird Johnson Park George Washington Memorial Parkway - Lady Bird Johnson Park.* Washington, D.C.: National Park Service, Park Cultural Landscapes Program.

National Park Service. 2006a. *National Park Service Cultural Landscapes Inventory, Union Square National Mall.* Washington, D.C.: National Park Service, National Capital Region.

National Park Service. 2006b *National Park Service Cultural Landscapes Inventory, The Mall National Mall.* Washington, D.C.: National Park Service, National Capital Region.

National Park Service. 2009a. *National Park Service Cultural Landscapes Inventory, Arlington House, The Robert E. Lee Memorial.* Washington, D.C.: National Park Service, Park Cultural Landscapes Program.

National Park Service. 2009b. *National Park Service Cultural Landscapes Inventory, Washington Monument Grounds Washington Monument.* Washington, D.C.: National Park Service, Park Cultural Landscapes Program.

National Park Service. 2015. *National Park Service Cultural Landscapes Inventory, Thomas Jefferson Memorial.* Washington, D.C.: National Park Service, Park Cultural Landscapes Program.

National Park Service. 2016. *National Park Service Cultural Landscapes Inventory, Memorial Avenue Corridor George Washington Memorial Parkway - Memorial Avenue.* Washington, D.C.: National Park Service, Park Cultural Landscapes Program.

National Park Service. 2018a. *National Park Service Cultural Landscapes Inventory, The Mall National Mall.* Washington, D.C.: National Park Service, Park Cultural Landscapes Program.

National Park Service. 2018b. *Evaluation of Visual Impact Analysis for Temporary Structures on the National Mall: Cultural Landscape Vista And View Preservation.* Washington, D.C.: National Park Service, National Capital Region, Resource Stewardship and Science, Cultural Resources Division.

National Park Service. 2022a. *National Park Service Cultural Landscapes Inventory, Mount Vernon Memorial Highway – North of Alexandria George Washington Memorial Parkway [Final].* Washington, D.C.: National Park Service, Park Cultural Landscapes Program.

National Park Service. 2022b. *National Park Service Cultural Landscapes Inventory, Lincoln Memorial National Mall and Memorial Parks.* Washington, D.C.: National Park Service, Park Cultural Landscapes Program.

National Park Service. 2024. *National Park Service Cultural Landscapes Inventory, Memorial Avenue Corridor George Washington Memorial Parkway.* Revised 8/2024. Washington, D.C.: National Park Service, Park Cultural Landscapes Program.

Pfanz, Donald, C. 1980. National Register of Historic Places Inventory – Nomination Form for Washington Monument. On file, National Park Service, National Capital Region, Washington, D.C.

Pfanz, Donald, C. 1981. National Register of Historic Places Inventory – Nomination Form for Thomas Jefferson Memorial. On file, National Capital Parks, Washington, D.C.

Robinson, Judith H., Daria Gasparini, and Tim Kerr. 2016. National Register of Historic Places Inventory Registration Form for National Mall Historic District – Boundary Increase/Additional Documentation. On file, Robinson & Associates, Inc., Washington, D.C.

Seagraves, Anna, Ann Fuqua, and Nicholas Veloz. 1980. National Register of Historic Places Inventory – Nomination Form for Arlington House, Arlington National Cemetery. On file, National Park Service, National Capital Region, Washington, D.C.

Scott, Gary. 1977. National Register of Historic Places Inventory – Nomination Form for American Revolution Statuary. On file, National Capitol Region, Washington, D.C.

Smith, Adam, Megan Tooker, and Susan Enscaore. 2013. National Register of Historic Places Inventory Registration Form for Arlington National Cemetery Historic District. On file, U.S. Army Corps of Engineers Engineer Research & Development Center-Construction Engineering Research Laboratory, Champaign, Illinois.

Virginia Polytechnic Institute and State University. 2009. *Cultural Landscape Report The Vegetation of the George Washington Memorial Parkway Central Section: Alexandria to Arlington Memorial Bridge. Volumes One and Two*. Prepared for the National Park Service.

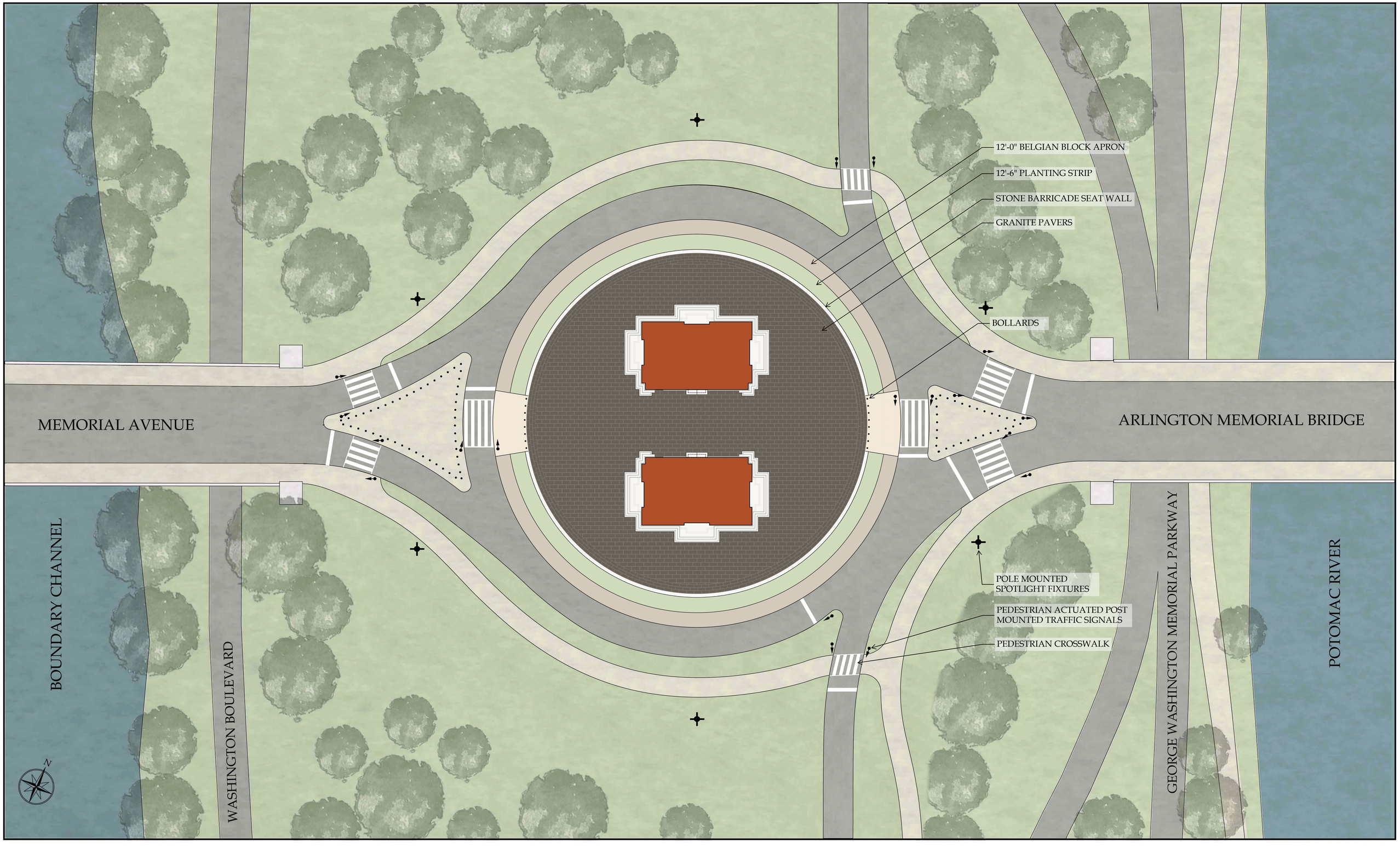


SCALE: 1/32" = 1'-0"

0 10' 20' 40' 80'

AUGUST 14, 2026

# TRIUMPHAL ARCH - WASHINGTON, DC

ENLARGED SITE PLAN

HARRISON DESIGN

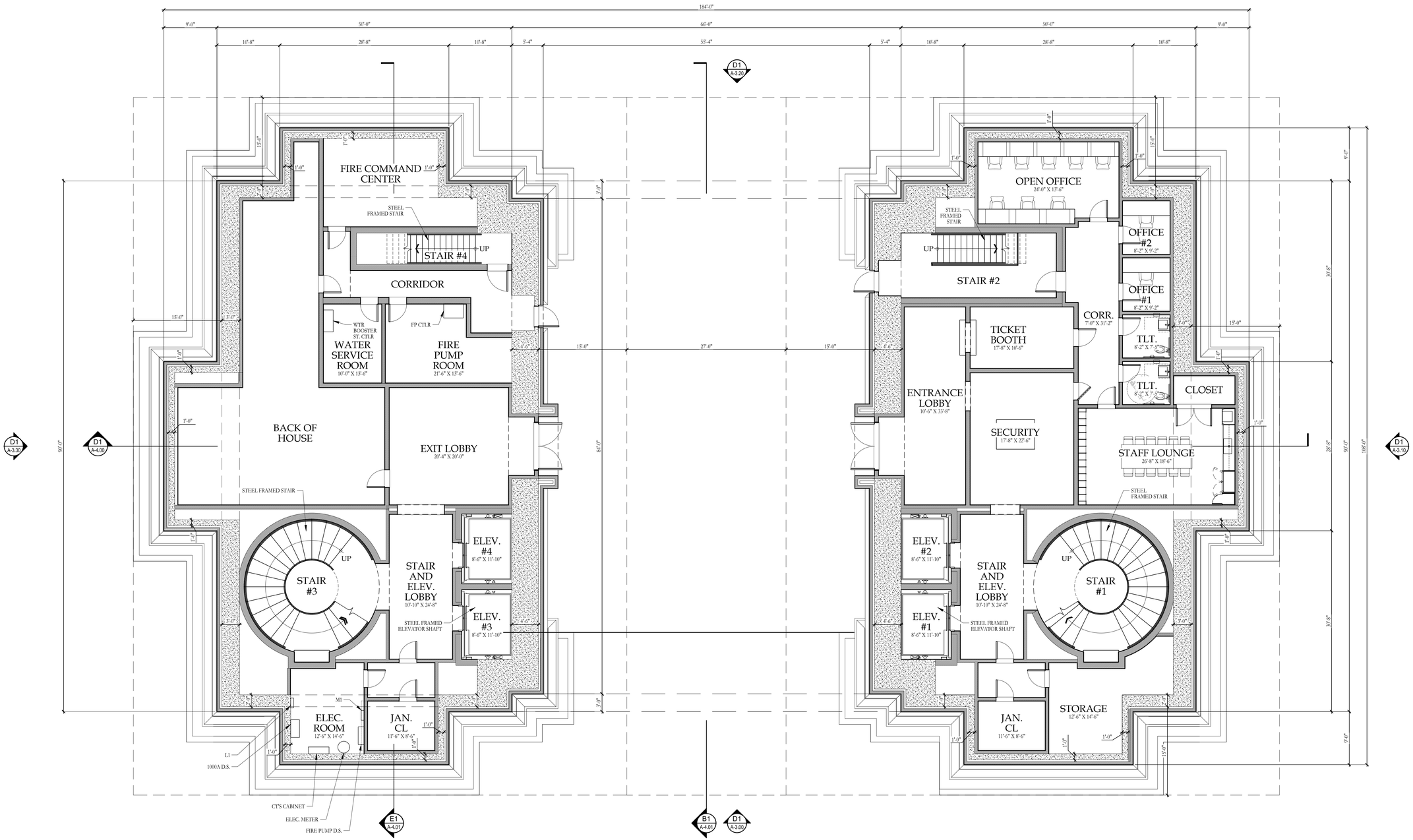


B1 A-2.00 GROUND LEVEL FLOOR PLAN
SCALE: 1/8" = 1'=0"

N

HARRISON DESIGN
1010 Wisconsin Avenue NW,
Suite 835
Washington, DC 20007
(202) 733-1479
harrisondesign.com

All drawings are the property of Harrison Design Associates, Inc. and must be returned at the completion of work. These shall not be reproduced, modified, or revised in any way without the written consent from, and proper compensation to, Harrison Design. The contractor shall check and verify all dimensions and report any discrepancies to Harrison Design before proceeding with the work. Harrison Design shall protect this right and be reimbursed for all legal and court costs, etc., for any necessary protection of the drawings. Submission of these drawings to any public body for any use does not release, in any way, the copyright and ownership of drawings provisions listed herein.

TRIUMPHAL ARCH - WASHINGTON, DC
WASHINGTON, DC

stamps

issue

| | |
|---|---|
| date | 06-05-2026 |
| scale | 1/8" = 1'-0" |
| drawn | JG, KA |
| checked | NC |
| project no. | 266206 |
| title | GROUND LEVEL FLOOR PLAN |
| sheet number | A-2.00 |

V:\Projects\St Therese Catholic Church\266206\A200 - Floor Plans.dwg Jun 05, 2026 - 5:44pm

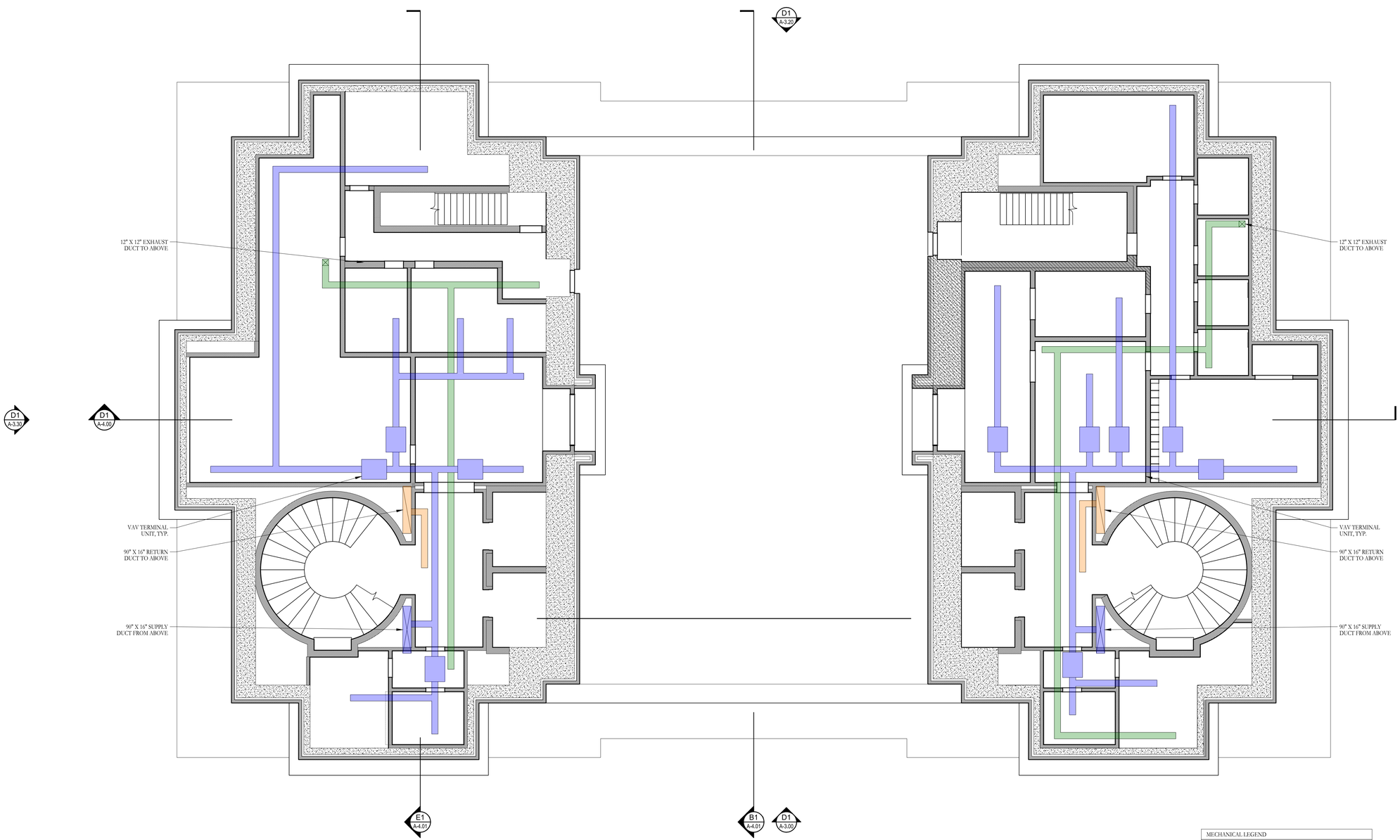


B1 / A-2.00 GROUND LEVEL REFLECTED CEILING PLAN

SCALE: 1/8" = 1'=0"

N

HARRISON DESIGN

1010 Wisconsin Avenue NW,
Suite 835
Washington, DC 20007
(202) 733-1479
harrisondesign.com

All drawings are the property of Harrison Design Associates, Inc. and must be returned at the completion of work. These shall not be reproduced, modified, or revised in any way without the written consent from, and proper compensation to, Harrison Design. The contractor shall check and verify all dimensions and report any discrepancies to Harrison Design before proceeding with the work. Harrison Design shall protect this right and be reimbursed for all legal and court costs, etc., for any necessary protection of the drawings. Submission of these drawings to any public body for any use does not release, in any way, the copyright and ownership of drawings provisions listed herein.

TRIUMPHAL ARCH - WASHINGTON, DC

WASHINGTON, DC

stamps

issue

date 06-05-2026

scale 1/8" = 1'-0"

drawn JG, KA checked NC

project no. 266206

title GROUND LEVEL MECHANICAL REFLECTED CEILING PLAN

sheet number A-2.01

V:\Projects\St Therese Catholic Church\266206 A200 - Floor Plans.dwg Jun 05, 2026 - 5:46pm

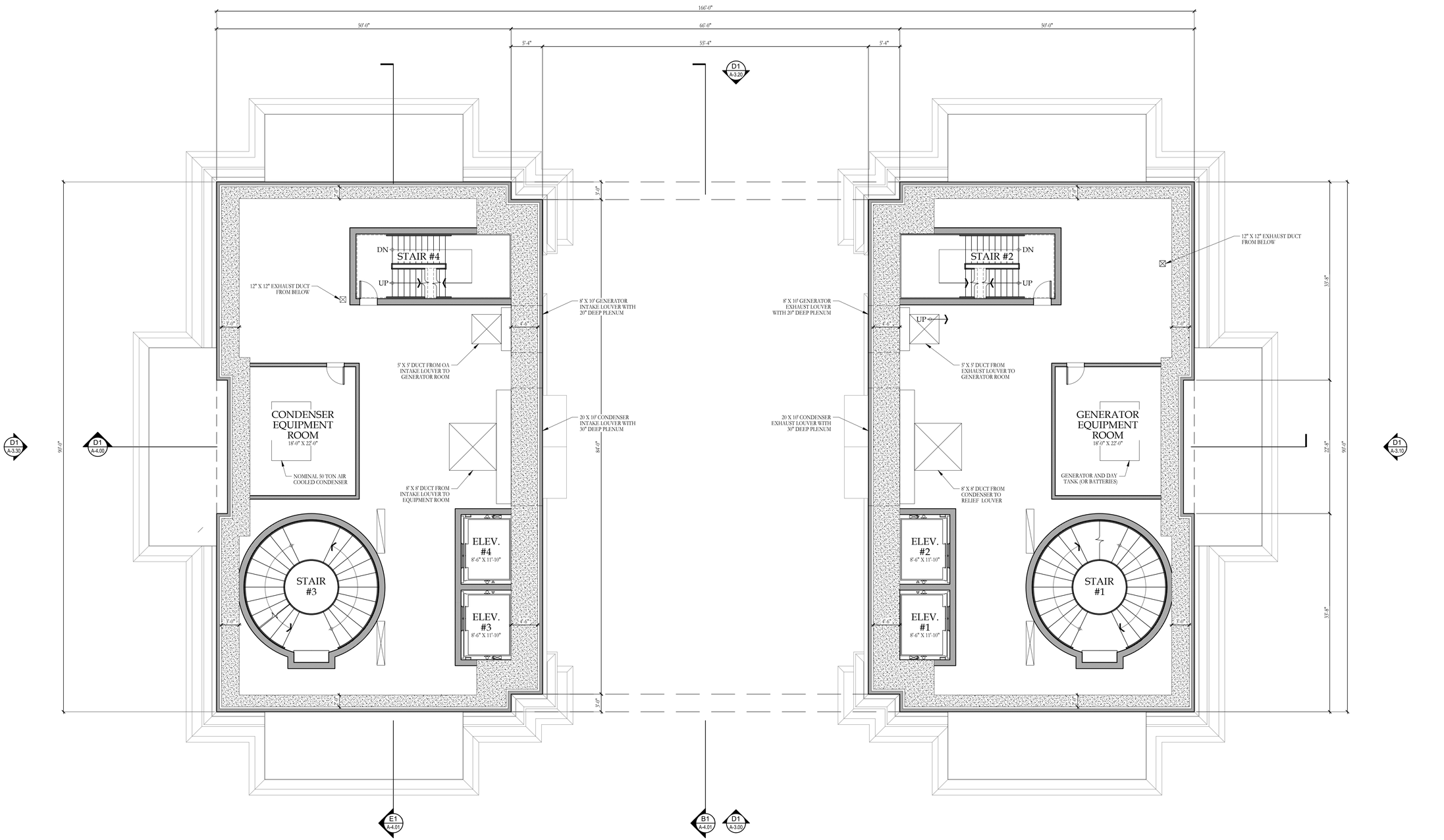


B1
A-2.10
MECHANICAL LEVEL FLOOR PLAN
SCALE: 1/8" = 1'=0"

N

HARRISON DESIGN
1010 Wisconsin Avenue NW,
Suite 835
Washington, DC 20007
(202) 733-1479
harrisondesign.com

All drawings are the property of Harrison Design Associates, Inc. and must be returned at the completion of work. These shall not be reproduced, modified, or revised in any way without the written consent from, and proper compensation to, Harrison Design. The contractor shall check and verify all dimensions and report any discrepancies to Harrison Design before proceeding with the work. Harrison Design shall protect this right and be reimbursed for all legal and court costs, etc., for any necessary protection of the drawings. Submission of these drawings to any public body for any use does not release, in any way, the copyright and ownership of drawings provisions listed herein.

TRIUMPHAL ARCH - WASHINGTON, DC

WASHINGTON, DC

stamps

issue

| | |
|---|---|
| date | 06-05-2026 |
| scale | 1/8" = 1'-0" |
| drawn | JG, KA |
| checked | NC |
| project no. | 266206 |
| title | LOWER MEZZANINE FLOOR PLAN |
| sheet number | A-2.10 |

V:\Projects\St Therese Catholic Church\266206 A\300 - Floor Plans.dwg Jun 05, 2026 - 5:46pm

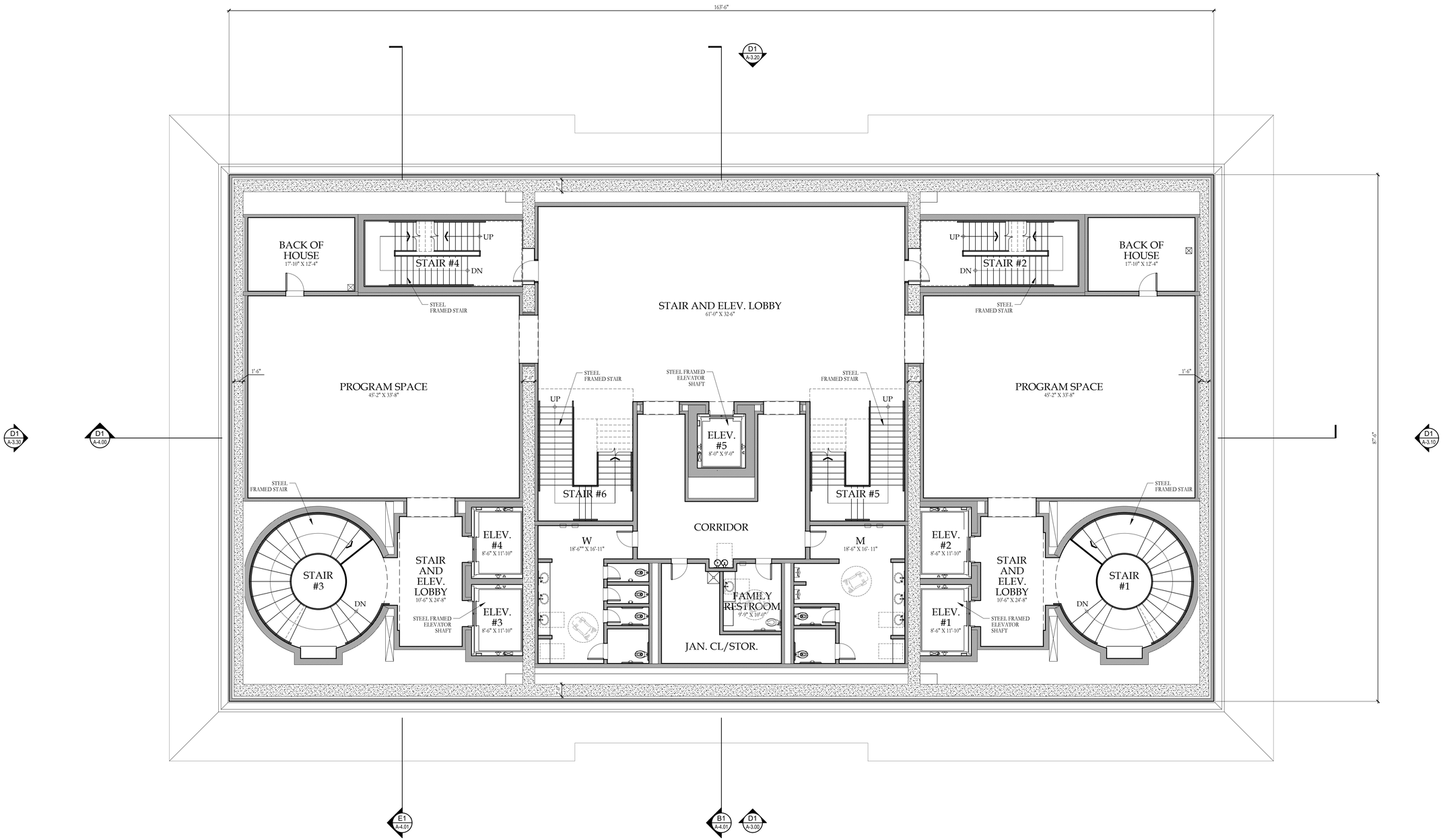


B1
A-2.20
GALLERY LEVEL FLOOR PLAN
SCALE: 1/8" = 1'=0"

N

HARRISON DESIGN
1010 Wisconsin Avenue NW,
Suite 835
Washington, DC 20007
(202) 733-1479
harrisondesign.com

All drawings are the property of Harrison Design Associates, Inc. and must be returned at the completion of work. These shall not be reproduced, modified, or revised in any way without the written consent from, and proper compensation to, Harrison Design. The contractor shall check and verify all dimensions and report any discrepancies to Harrison Design before proceeding with the work. Harrison Design shall protect this right and be reimbursed for all legal and court costs, etc., for any necessary protection of the drawings. Submission of these drawings to any public body for any use does not release, in any way, the copyright and ownership of drawings provisions listed herein.

TRIUMPHAL ARCH - WASHINGTON, DC

WASHINGTON, DC

stamps

issue

| | |
|---|---|
| date | 06-05-2026 |
| scale | 1/8" = 1'-0" |
| drawn | JG, KA |
| checked | NC |
| project no. | 266206 |
| title | GALLERY LEVEL FLOOR PLAN |
| sheet number | A-2.20 |

V:\Projects\St Therese Catholic Church\266206 A200 - Floor Plans.dwg Jun 05, 2026 - 5:45pm

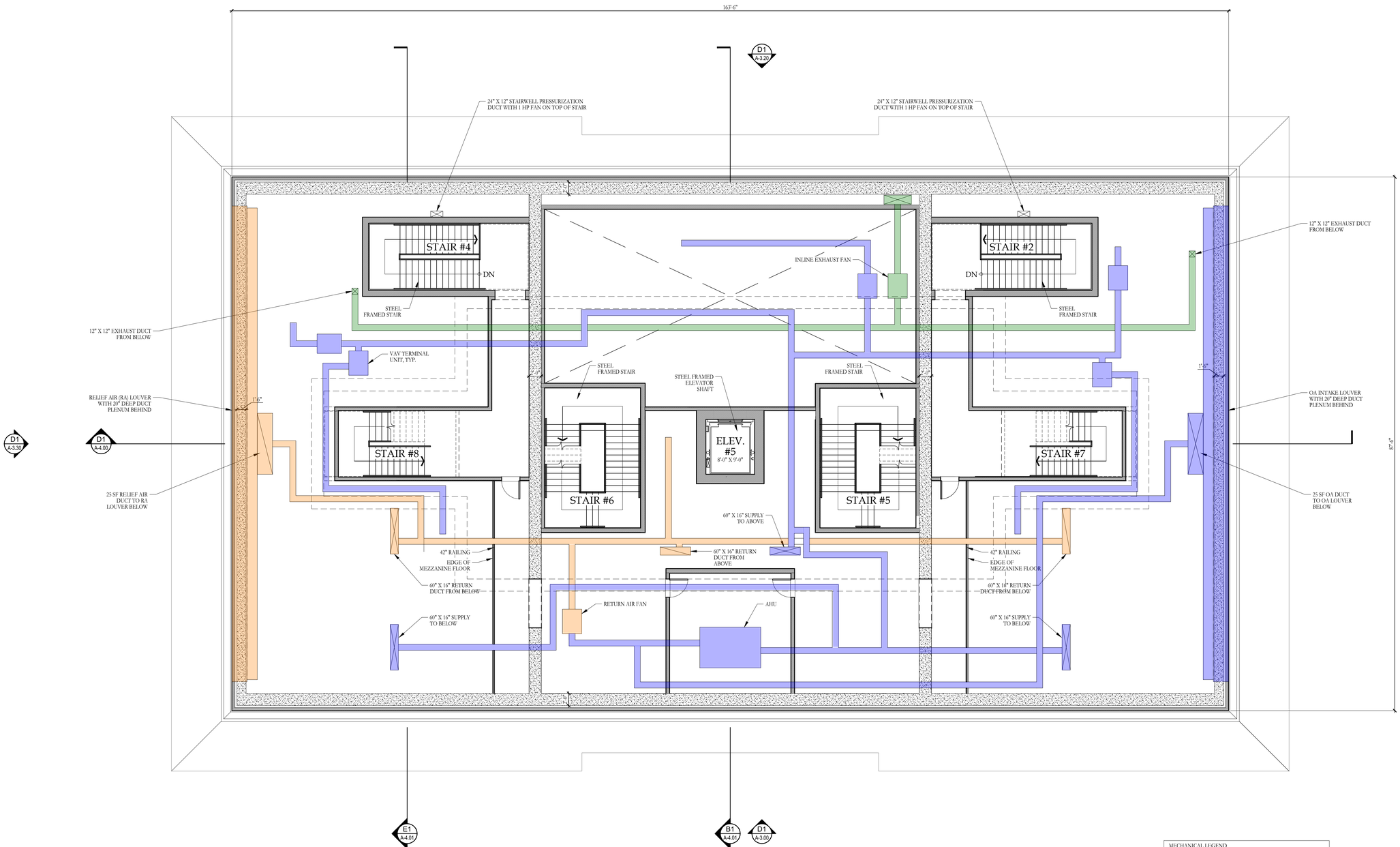


MECHANICAL LEGEND

- SUPPLY AIR
- RETURN / RELIEF AIR
- EXHAUST AIR
- DUCT RISER

B1
A-2.30
MEZZANINE FLOOR PLAN
SCALE: 1/8" = 1'=0"

N

HARRISON DESIGN

1010 Wisconsin Avenue NW,
Suite 835
Washington, DC 20007
(202) 733-1479
harrisondesign.com

All drawings are the property of Harrison Design Associates, Inc. and must be returned at the completion of work. These shall not be reproduced, modified, or revised in any way without the written consent from, and proper compensation to, Harrison Design. The contractor shall check and verify all dimensions and report any discrepancies to Harrison Design before proceeding with the work. Harrison Design shall protect this right and be reimbursed for all legal and court costs, etc., for any necessary protection of the drawings. Submission of these drawings to any public body for any use does not release, in any way, the copyright and ownership of drawings provisions listed herein.

TRIUMPHAL ARCH - WASHINGTON, DC

WASHINGTON, DC

stamps

issue

| | |
|---|---|
| date | 06-05-2026 |
| scale | 1/8" = 1'-0" |
| drawn | JG, KA |
| checked | NC |
| project no. | 266206 |
| title | UPPER MEZZANINE FLOOR PLAN |
| sheet number | A-2.30 |

V:\Projects\St Therese Catholic Church\266206 A200 - Floor Plans.dwg Jun 05, 2026 - 5:46pm

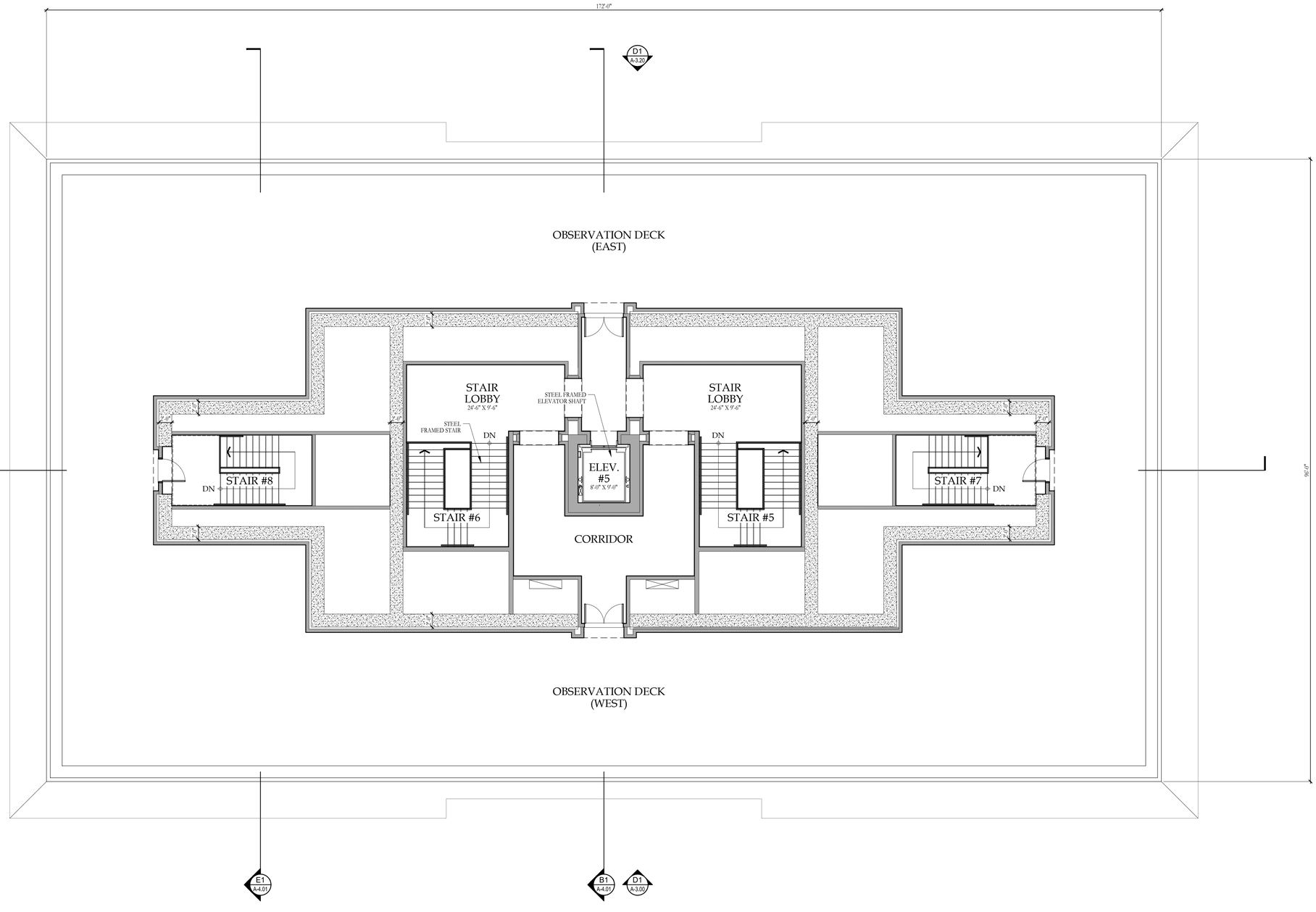


B1
A-2.40
OBSERVATION DECK LEVEL FLOOR PLAN
SCALE: 1/8" = 1'=0"

N

HARRISON DESIGN
1010 Wisconsin Avenue NW,
Suite 835
Washington, DC 20007
(202) 733-1479
harrisondesign.com

All drawings are the property of Harrison Design Associates, Inc. and must be returned at the completion of work. These shall not be reproduced, modified, or revised in any way without the written consent from, and proper compensation to, Harrison Design. The contractor shall check and verify all dimensions and report any discrepancies to Harrison Design before proceeding with the work. Harrison Design shall protect this right and be reimbursed for all legal and court costs, etc., for any necessary protection of the drawings. Submission of these drawings to any public body for any use does not release, in any way, the copyright and ownership of drawings provisions listed herein.

TRIUMPHAL ARCH - WASHINGTON, DC

WASHINGTON, DC

stamps

issue

| | |
|---|---|
| date | 06-05-2026 |
| scale | 1/8" = 1'-0" |
| drawn | JG, KA |
| checked | NC |
| project no. | 266206 |
| title | OBSERVATION DECK LEVEL FLOOR PLAN |
| sheet number | A-2.40 |

V:\Projects\St Therese Catholic Church\266206 A200 - Floor Plans.dwg Jun 05, 2026 - 5:45pm

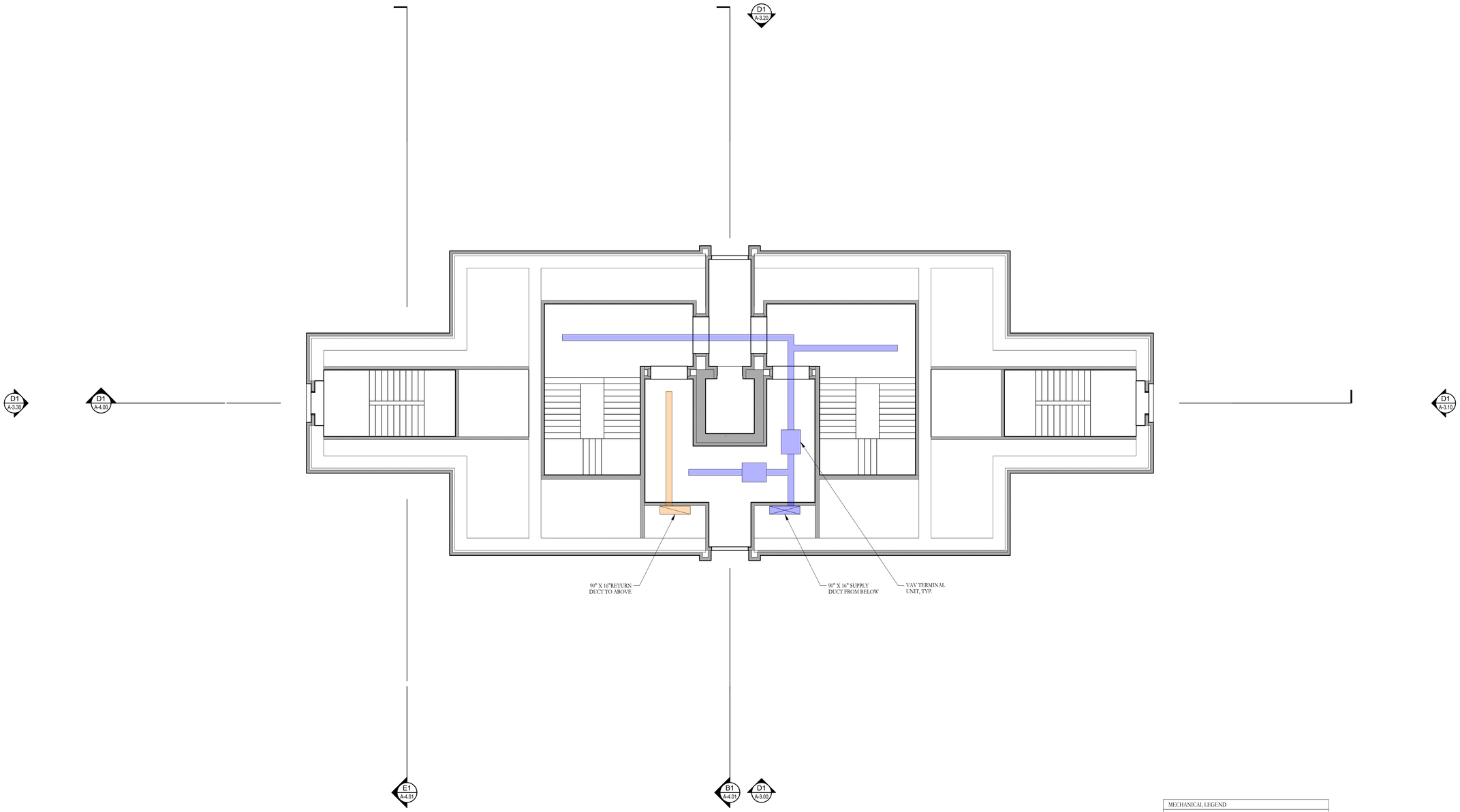


MECHANICAL LEGEND

- SUPPLY AIR
- RETURN / RELIEF AIR
- EXHAUST AIR
- DUCT RISER

B1 / A-2.41 OBSERVATION DECK LEVEL REFLECTED CEILING PLAN

SCALE: 1/8" = 1'=0"

N

HARRISON DESIGN

1010 Wisconsin Avenue NW,
Suite 835
Washington, DC 20007
(202) 733-1479
harrisondesign.com

All drawings are the property of Harrison Design Associates, Inc. and must be returned at the completion of work. These shall not be reproduced, modified, or revised in any way without the written consent from, and proper compensation to, Harrison Design. The contractor shall check and verify all dimensions and report any discrepancies to Harrison Design before proceeding with the work. Harrison Design shall protect this right and be reimbursed for all legal and court costs, etc., for any necessary protection of the drawings. Submission of these drawings to any public body for any use does not release, in any way, the copyright and ownership of drawings provisions listed herein.

TRIUMPHAL ARCH - WASHINGTON, DC

WASHINGTON, DC

stamps

issue

| | |
|---|---|
| date | 06-05-2026 |
| scale | 1/8" = 1'-0" |
| drawn | JG, KA |
| checked | NC |
| project no. | 266206 |
| title | OBSERVATION DECK LEVEL MECHANICAL REFLECTED CEILING PLAN |
| sheet number | A-2.41 |

V:\Projects\St Therese Catholic Church\266206 A200 - Floor Plans.dwg Jun 05, 2026 - 5:46pm

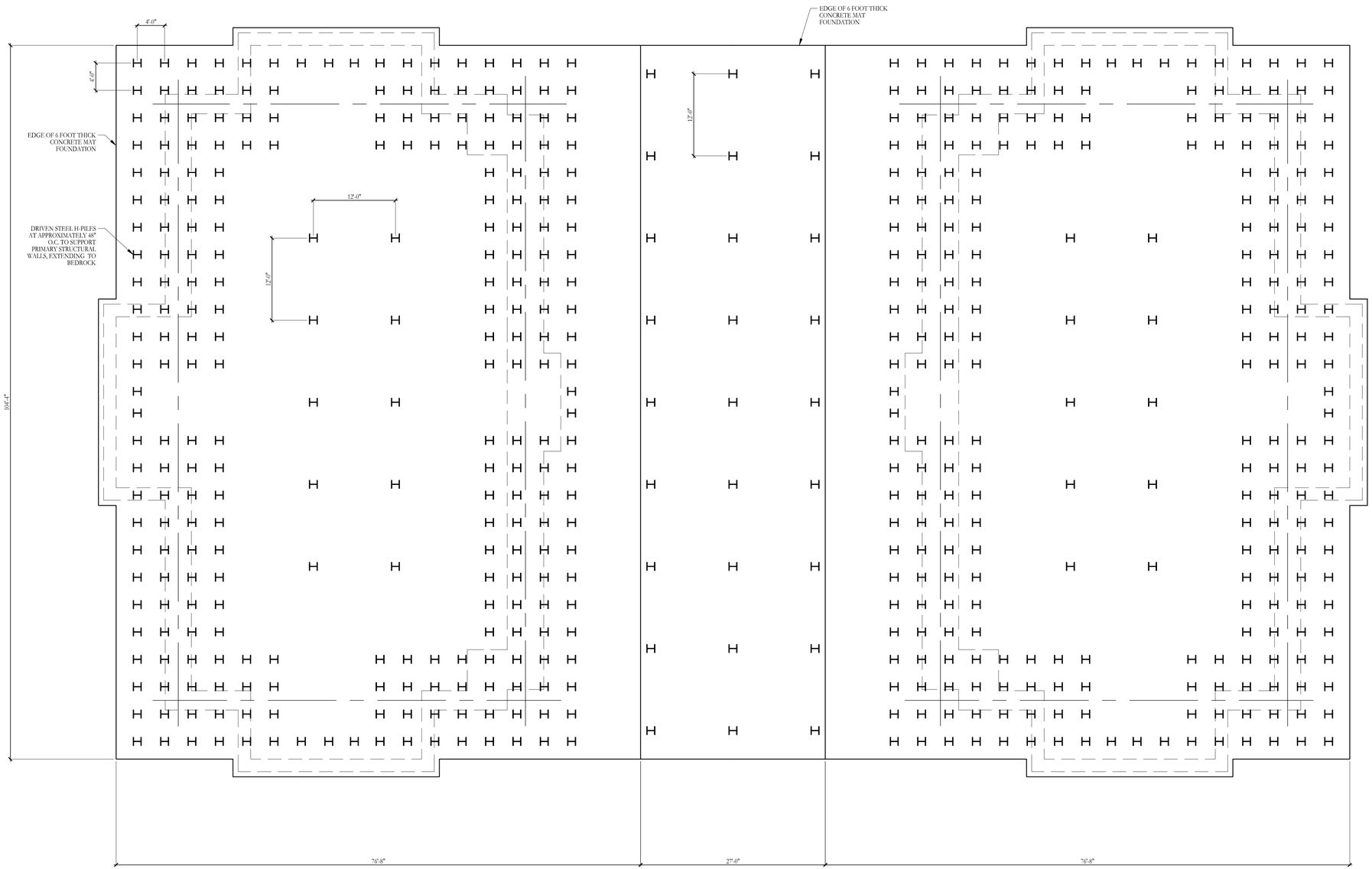


B1 / S-1.00 FOUNDATION PLAN - OPTION 1
SCALE: 1/8" = 1'=0"

N

HARRISON DESIGN
1010 Wisconsin Avenue NW,
Suite 835
Washington, DC 20007
(202) 733-1479
harrisondesign.com

All drawings are the property of Harrison Design Associates, Inc. and must be returned at the completion of work. These shall not be reproduced, modified, or revised in any way without the written consent from, and proper compensation to, Harrison Design. The contractor shall check and verify all dimensions and report any discrepancies to Harrison Design before proceeding with the work. Harrison Design shall protect this right and be reimbursed for all legal and court costs, etc., for any necessary protection of the drawings. Submission of these drawings to any public body for any use does not release, in any way, the copyright and ownership of drawings provisions listed herein.

NOT RELEASED FOR CONSTRUCTION

TRIUMPHAL ARCH - WASHINGTON, DC
WASHINGTON, DC

stamps

issue

| | |
|---|---|
| date | 06-05-2026 |
| scale | 1/8" = 1'-0" |
| drawn | JG, KA |
| checked | NC |
| project no. | 266206 |
| title | FOUNDATION PLAN OPTION 1 |
| sheet number | S-1.00 |

V:\Projects\St Therese Catholic Church\266206-Foundation Plan.dwg Jun 05, 2026 - 5:56pm

NOT RELEASED FOR CONSTRUCTION

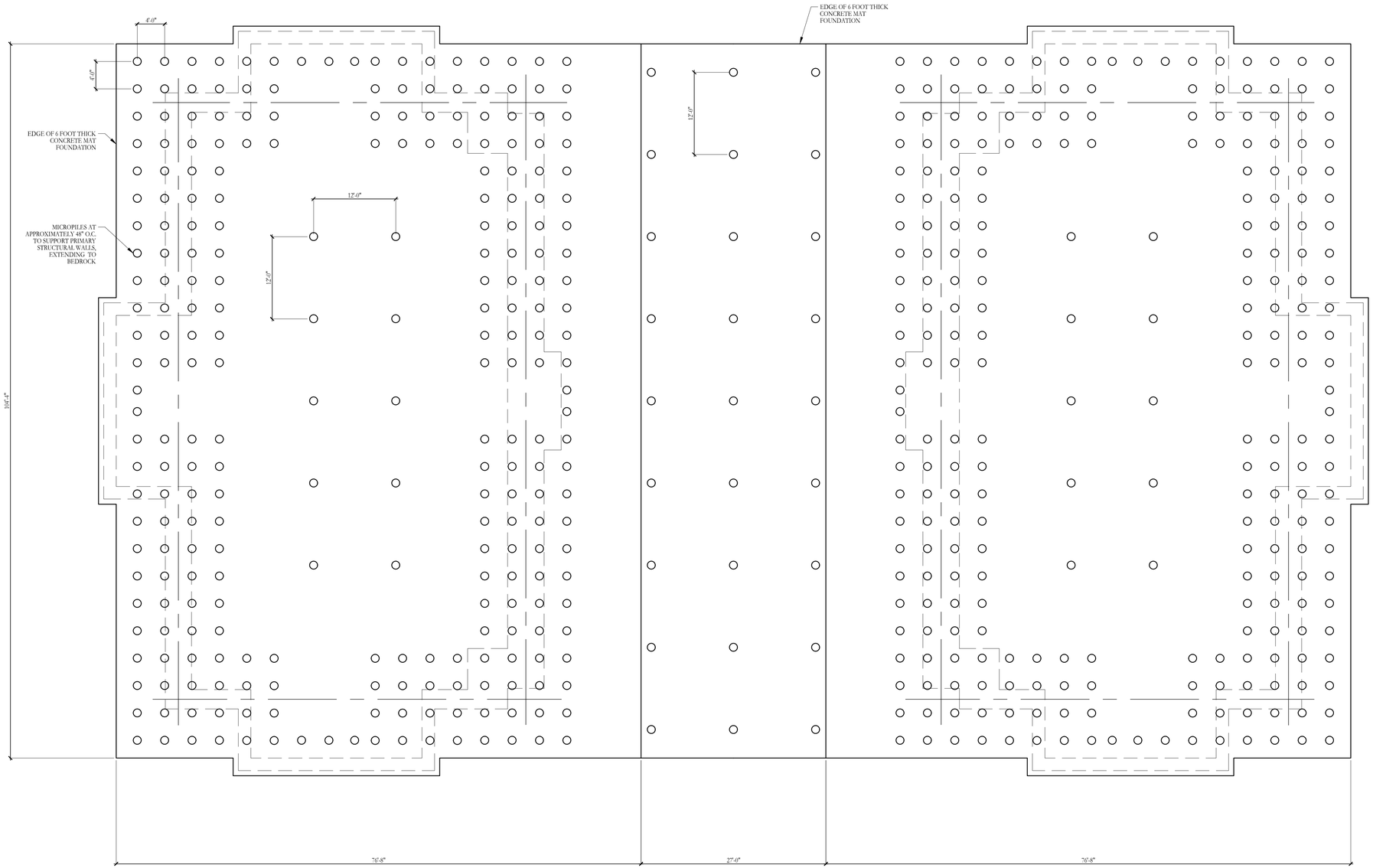


B1 / S-1.00 FOUNDATION PLAN - OPTION 2
SCALE: 1/8" = 1'=0"

N

HARRISON DESIGN
1010 Wisconsin Avenue NW,
Suite 835
Washington, DC 20007
(202) 733-1479
harrisondesign.com

All drawings are the property of Harrison Design Associates, Inc. and must be returned at the completion of work. These shall not be reproduced, modified, or revised in any way without the written consent from, and proper compensation to, Harrison Design. The contractor shall check and verify all dimensions and report any discrepancies to Harrison Design before proceeding with the work. Harrison Design shall protect this right and be reimbursed for all legal and court costs, etc., for any necessary protection of the drawings. Submission of these drawings to any public body for any use does not release, in any way, the copyright and ownership of drawings provisions listed herein.

NOT RELEASED FOR CONSTRUCTION

TRIUMPHAL ARCH - WASHINGTON, DC

WASHINGTON, DC

stamps

issue

| | |
|---|---|
| date | 06-05-2026 |
| scale | 1/8" = 1'-0" |
| drawn | JG, KA |
| checked | NC |
| project no. | 266206 |
| title | FOUNDATION PLAN OPTION 2 |
| sheet number | S-1.01 |

V:\Projects\St Therese Catholic Church\266206-Foundation Plan.dwg Jun 05, 2026 - 5:56pm

NOT RELEASED FOR CONSTRUCTION

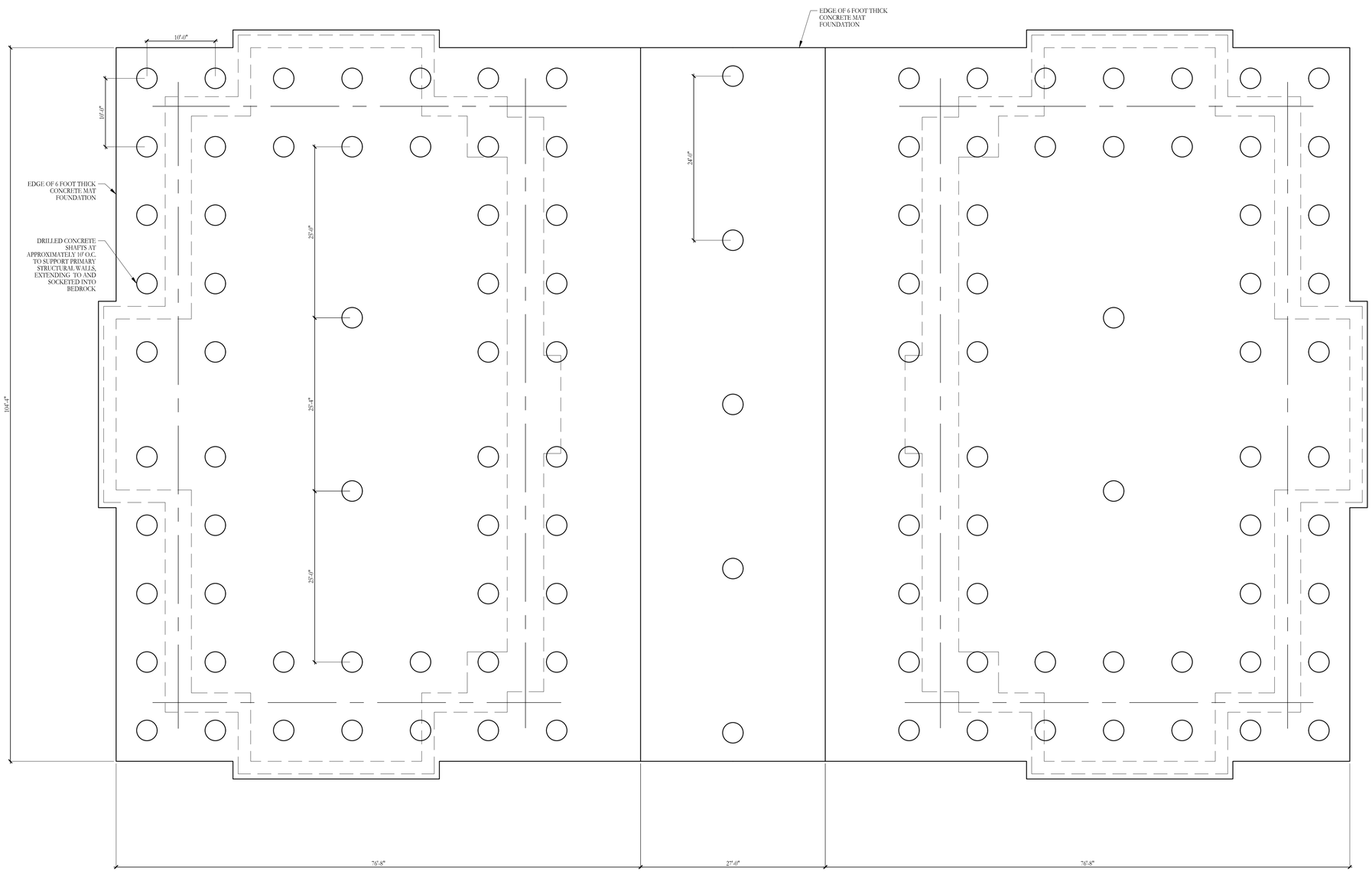


B1 / S-1.00 FOUNDATION PLAN - OPTION 3
SCALE: 1/8" = 1'-0"

N

HARRISON DESIGN
1010 Wisconsin Avenue NW,
Suite 835
Washington, DC 20007
(202) 733-1479
harrisondesign.com

All drawings are the property of Harrison Design Associates, Inc. and must be returned at the completion of work. These shall not be reproduced, modified, or revised in any way without the written consent from, and proper compensation to, Harrison Design. The contractor shall check and verify all dimensions and report any discrepancies to Harrison Design before proceeding with the work. Harrison Design shall protect this right and be reimbursed for all legal and court costs, etc., for any necessary protection of the drawings. Submission of these drawings to any public body for any use does not release, in any way, the copyright and ownership of drawings provisions listed herein.

NOT RELEASED FOR CONSTRUCTION

# TRIUMPHAL ARCH - WASHINGTON, DC

WASHINGTON, DC

stamps

issue

| | |
|---|---|
| date | 06-05-2026 |
| scale | 1/8" = 1'-0" |
| drawn | JG, KA |
| checked | NC |
| project no. | 266206 |
| title | FOUNDATION PLAN OPTION 3 |
| sheet number | S-1.02 |

V:\Projects\St Therese Catholic Church\266206-Foundation Plan.dwg Jun 05, 2026 - 5:57pm

NOT RELEASED FOR CONSTRUCTION

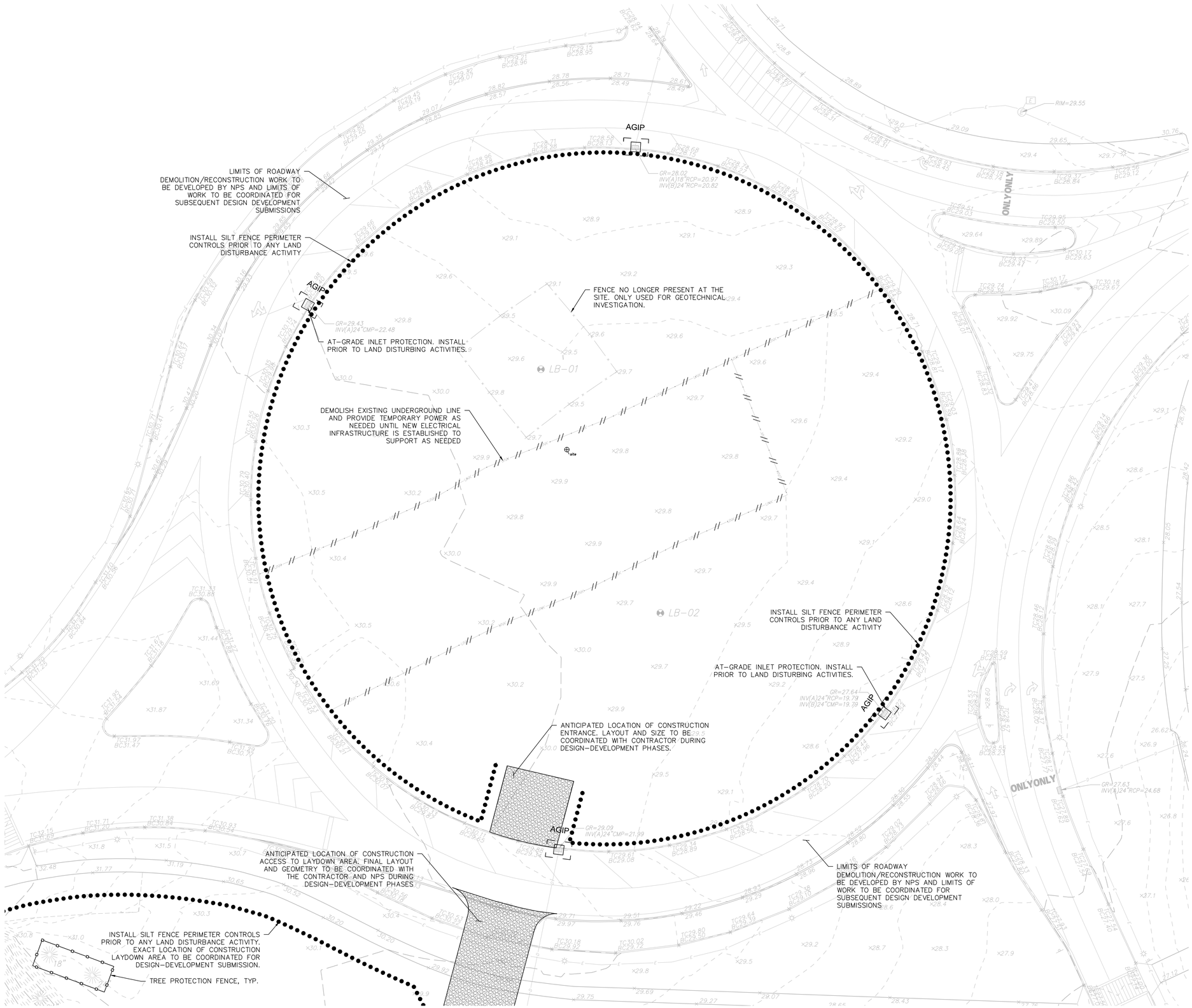


SITE DEMOLITION AND SITE PREPARATION NOTES:

1. THE CONTRACTOR SHALL INSPECT THE SITE THOROUGHLY AND FIELD-VERIFY THE LOCATION AND DEPTH OF ALL EXISTING UTILITIES. CONTRACTORS USING THESE PLANS FOR DEMOLITION OR CONSTRUCTION SHALL CONFIRM ALL UTILITIES IN THE FIELD.
2. THE CONTRACTOR SHALL TAKE ALL NECESSARY PRECAUTIONARY AND PROTECTIVE MEASURES, INCLUDING BOT NOT LIMITED TO SIGNS, LIGHTS, FENCES, BARRIERS, AND PEDESTRIAN AND TRAFFIC CONTROL MEASURES DURING DEMOLITION.
3. RECYCLED ASPHALT OR CONCRETE MAY NOT BE USED FOR FILL.

DOEE SOIL EROSION AND SEDIMENT CONTROL PLAN NOTES:

1. FOLLOWING INITIAL LAND DISTURBANCE OR RE-DISTURBANCE, PERMANENT OR INTERIM STABILIZATION MUST BE COMPLETED WITHIN SEVEN (7) CALENDAR DAYS FOR THE SURFACES OF ALL PERIMETER CONTROLS, DIKES, SWALES, DITCHES,PERIMETER SLOPES, AND SLOPES GREATER THAN 3H:1V; AND FOURTEEN (14) DAYS FOR ALL OTHER DISTURBED OR GRADED AREAS ON THE PROJECT SITE. THESE REQUIREMENTS DO NOT APPLY TO AREAS SHOWN ON THE PLAN THAT ARE USED FOR MATERIAL STORAGE OTHER THAN STOCKPILING, OR FOR THOSE AREAS ON THE PLAN WHERE ACTUAL CONSTRUCTION ACTIVITIES ARE BEING PERFORMED. MAINTENANCE SHALL BE PERFORMED AS NECESSARY SO THAT STABILIZED AREAS CONTINUOUS MEET THE APPROPRIATE REQUIREMENTS OF THE DISTRICT OF COLUMBIA STANDARDS AND SPECIFICATIONS FOR SOIL EROSION AND SEDIMENT CONTROL.
2. ESC MEASURES SHALL BE IN PLACE BEFORE AND DURING LAND DISTURBANCE.
3. CONTACT DOEE INSPECTION (202 535-2977 TO SCHEDULE A PRE-CONSTRUCTION MEETING AT LEAST THREE (3) DAYS BEFORE THE COMMENCEMENT OF A LAND-DISTURBING ACTIVITY.
4. A COPY OF THE APPROVED PLAN SET WILL BE MAINTAINED AT THE CONSTRUCTION SITE FROM THE DATE THAT CONSTRUCTION ACTIVITIES BEGIN TO THE DATE OF FINAL STABILIZATION AND WILL BE AVAILABLE FOR DOEE INSPECTORS.
5. ESC MEASURES SHALL BE IN PLACE TO STABILIZE AN EXPOSED AREA AS SOON AS PRACTICABLE AFTER CONSTRUCTION ACTIVITY HAS BEEN OR PERMANENTLY CEASED BUT NO LATER THAN FOURTEEN (14) DAYS FOLLOWING CESSATION, EXCEPT THAT TEMPORARY OR PERMANENT STABILIZATION SHALL BE IN PLACE AT THE END OF EACH DAY OF UNDERGROUND UTILITY WORK THAT IS NOT CONTAINED WITHIN A LARGER DEVELOPMENT SITE.
6. STOCKPILED MATERIAL BEING ACTIVELY USED DURING A PHASE OF CONSTRUCTION SHALL BE PROTECTED AGAINST EROSION BY ESTABLISHING AND MAINTAINING PERIMETER CONTROLS AROUND THE STOCKPILE.
7. STOCKPILED MATERIAL NOT BEING ACTIVELY USED OR ADDED TO SHALL BE STABILIZED WITH MULCH, TEMPORARY VEGETATION, HYDRO-SEE OR PLASTIC WITHIN FIFTEEN CALENDAR DAYS AFTER ITS LAST USE OR ADDITION.
8. PROTECT BEST MANAGEMENT PRACTICES FROM SEDIMENTATION AND OTHER DAMAGE DURING CONSTRUCTION FOR PROPER POST CONSTRUCTION OPERATION.
9. REQUEST A DOEE INSPECTOR'S APPROVAL AFTER THE INSTALLATION OF PERIMETER EROSION AND SEDIMENT CONTROLS, BUT BEFORE PROCEEDING WITH ANY OTHER EARTH DISTURBANCE OR GRADING.
10. REQUEST A DOEE INSPECTOR'S APPROVAL AFTER FINAL STABILIZATION OF THE SITE AND BEFORE THE REMOVAL OF EROSION AND SEDIMENT CONTROLS.
11. FINAL STABILIZATION MEANS THAT ALL LAND-DISTURBING ACTIVITIES AT THE SITE HAVE BEEN COMPLETED AND EITHER OF THE FOLLOWING TWO CRITERIA HAVE BEEN MET: (1) A UNIFORM PERENNIAL VEGETATIVE COVER WITH A DENSITY OF SEVENTY PERCENT OF THE NATIVE BACKGROUND VEGETATIVE COVER FOR THE AREA HAS BEEN ESTABLISHED ON ALL UNPAVED AREAS AND AREAS NOT COVERED BY PERMANENT STRUCTURES OR (2) EQUIVALENT PERMANENT STABILIZATION MEASURES HAVE BEEN EMPLOYED.
12. FOLLOW THE REQUIREMENTS OF THE UNITED STATED EPS SWPPP AND MAINTAIN A LEGIBLE COPY OF THIS SWPPP ON SITE.
13. POST A SIGN THAT NOTIFIES THE PUBLIC TO CONTACT DOEE IN THE EVENT OF EROSION OR OTHER POLLUTION. THE SIGHT WILL BE PLACED AT EACH ENTRANCE TO THE SITE OR AS DIRECTED BY THE DOEE INSPECTOR. EACH SIGN WILL BE NO LESS THAN 18 x 24 INCHES IN SIZE AND MADE OF MATERIALS THAT WILL WITHSTAND WEATHER FOR THE DURATION OF THE PROJECT. LETTERING WILL BE AT LEAST 1 INCH IN HEIGHT AND EASILY READABLE BY THE PUBLIC FROM A DISTANCE OF TWELVE FEET (12 FT). THE SIGN MUST DIRECT THE PUBLIC, IN SUBSTANTIALLY THE FOLLOWING FORM: " TO REPORT EROSION, RUNOFF OR STORMWATER POLLUTION" AND WILL PROVIDE TEH CONSTRUCTION SITE ADDRESS, DOEE'S TELEPHONE NUMBER, DOEE'S EMAIL ADDRESS AND THE 311 MOBILE APP HEADING.

| Date | Description | No. |
|---|---|---|
| Revisions | | |

Signature Date


LANGAN
Langan Engineering and Environmental Services, LLC
1300 Wilson Blvd
Arlington, VA 22209
www.langan.com


Project

# CONFIDENTIAL PROJECT

GEORGE WASHINGTON MEMORIAL PARKWAY
PAR03170001
WASHINGTON DISTRICT OF COLUMBIA

Drawing Title

# DEMOLITION AND SITE PREPARATION PLAN

| Project No. | Drawing No. |
|---|---|
| 270228201 | CD101 |
| Date: 05/22/2026 | |
| Drawn By: AMF | |
| Checked By: RCL | 0 |

LANGAN
Project No. 001234501

©2016 Langan

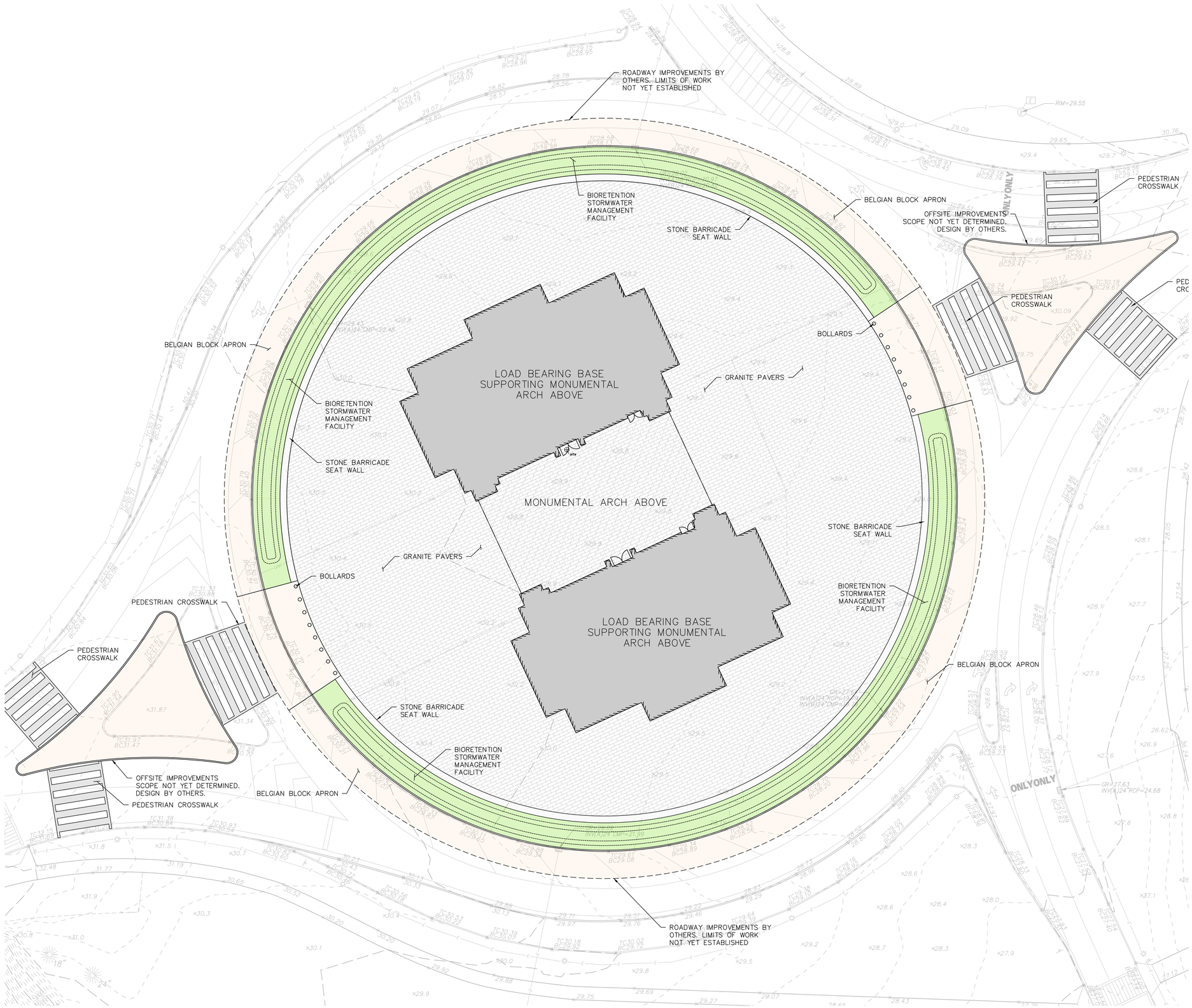


SITE PLAN NOTES:

1. ALL ELEVATIONS ARE SHOWN IN DATUM NAVD 88.
2. CONSTRUCTION INFORMATION AND REQUIREMENTS ARE LOCATED IN NUMEROUS PROJECT DOCUMENTS SUCH AS DRAWINGS, SPECIFICATIONS, DETAILS, NOTES, ORDINANCES, CODES, PERMITS, STANDARDS, GUIDELINES AND MANUFACTURER DOCUMENTS. THE MOST STRINGENT CRITERIA SHALL APPLY.
3. CONTRACTOR IS RESPONSIBLE FOR OBTAINING COPIES, UNDERSTANDING AND IMPLEMENTING THE REFERENCED PROJECT STANDARDS (I.E. ASTM, AWWA, AASHTO, ETC.), PROJECT PERMIT REQUIREMENTS, REGULATORY CODES AND REGULATIONS, AND MANUFACTURER GUIDELINES AND REQUIREMENTS.
4. UNDERGROUND UTILITIES AND INFRASTRUCTURE ARE LOCATED THROUGHOUT THE SITE AND MAY BE PRESENT IN AREAS OF PROPOSED WORK. CONTRACTOR IS RESPONSIBLE FOR FIELD VERIFYING AND LOCATING UNDERGROUND UTILITIES AND INFRASTRUCTURE PRIOR TO WORK. IF CONFLICTS WITH PROPOSED WORK ARE OBSERVED, CONTRACTOR SHALL NOTIFY ENGINEER IMMEDIATELY FOR REVIEW. CONTRACTOR SHALL USE EXTREME CARE WHEN WORKING ADJACENT TO EXISTING UNDERGROUND UTILITIES AND INFRASTRUCTURE.
5. THE ROADWAY IMPROVEMENTS SURROUNDING MEMORIAL CIRCLE AND THE PROPOSED MONUMENT ARE CURRENTLY BEING DEVELOPED BY NPS. THE LIMITS OF ROADWORK SHOWN HEREIN ARE PROVIDED FOR REFERENCE ONLY AND WILL BE COORDINATED WITH NPS DURING THE DESIGN DEVELOPMENT PHASE OF THE PROJECT.

LEGEND:

| | |
|---|---|
| LOAD BEARING BASE SUPPORTING MONUMENTAL ARCH ABOVE | |
| ARCH OVERHEAD | |
| GRANITE PAVERS | |
| LANDSCAPE | |

SCALE: 1 INCH = 20 FEET

| Date | Description | No. |
|---|---|---|

Revisions

Signature Date

LANGAN
Langan Engineering and Environmental Services, LLC
1300 Wilson Blvd
Arlington, VA 22209
www.langan.com

Project

# CONFIDENTIAL PROJECT

GEORGE WASHINGTON MEMORIAL PARKWAY
PAR03170001
WASHINGTON DISTRICT OF COLUMBIA

Drawing Title

# SITE PLAN

| Project No. | Drawing No. |
|---|---|
| 270228201 | CS101 |
| Date: 05/22/2026 | |
| Drawn By: AMF | |
| Checked By: RCL | |

LANGAN
Project No. 001234501

© 2018 Langan

Date: 5/22/2026 Time: 17:34 User: tarvin Style Table: Langan.stb Layout: Layout1 Document Code: 270228201-0301-CS101-0101

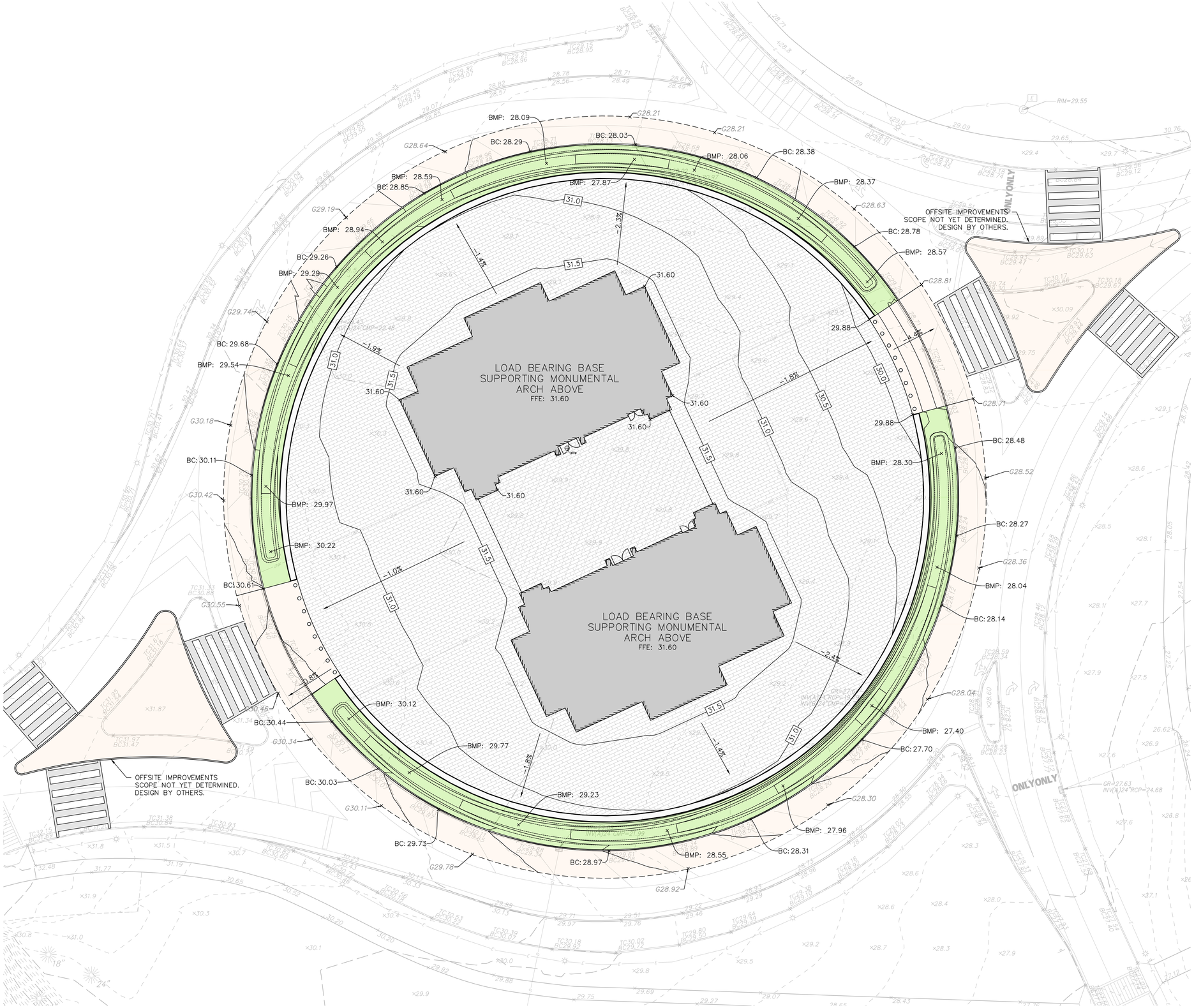


GRADING PLAN NOTES:

1. ALL GRADING, DRAINAGE AND UTILITY INSTALLATION AND/OR CONSTRUCTION SHALL BE PERFORMED IN ACCORDANCE WITH THE PROJECT SPECIFICATIONS OR LOCAL REQUIREMENTS. SHOULD A DIFFERENCE IN REQUIREMENTS OCCUR, THE STRICTER OF THE TWO REGULATIONS WILL APPLY.
2. GRADE ALL AREAS OTHER THAN PAVED GRADED AREAS AND BUILDINGS, INCLUDING EXCAVATED AREAS, FILLED AND TRANSITION AREAS, AND LANDSCAPED AREAS TO FINISH GRADE ELEVATIONS OR CONTOURS AS INDICATED ON DRAWINGS. FINISHED SUBGRADE SURFACE SHALL BE UNIFORM AND SMOOTH, FREE FROM ROCK, DEBRIS, OR IRREGULAR SURFACE CHANGES. FINISHED SUBGRADE SHALL NOT BE MORE THAN 0.01 FEET ABOVE OR BELOW ESTABLISHED FINISHED SUBGRADE ELEVATION, AND ALL GROUND SURFACES SHALL VARY UNIFORMLY BETWEEN INDICATED ELEVATIONS. DITCHES SHALL BE GRADED TO ALLOW FOR PROPER DRAINAGE WITHOUT PONDING AND IN A MANNER THAT WILL MINIMIZE EROSION POTENTIAL.
3. ALL DRAINAGE STRUCTURES AND STORM SEWER PIPES SHALL MEET HEAVY DUTY TRAFFIC LOADING AND BE INSTALLED ACCORDINGLY.
4. SITE GRADING SHALL NOT PROCEED UNTIL ALL EROSION CONTROL MEASURES HAVE BEEN INSTALLED.
5. CONTRACTOR SHALL REVIEW ALL DRAINAGE CONNECTIONS TO MANHOLES AND CATCH BASINS AND INCREASE THE INLET BOX SIZES AS NECESSARY TO ACCOMMODATE THE PROPOSED INLET AND OUTLET PIPES.
6. ALL GRADING IS TO PROMOTE POSITIVE DRAINAGE AWAY FROM THE BUILDING.
7. ALL PAVING THICKNESSES SHOWN ARE THE COMPACTED THICKNESS.
8. CURB ELEVATIONS INDICATED "BC" ARE BOTTOM OF CURB ELEVATIONS. CURB ELEVATIONS INDICATED AS "TC" ARE TOP OF CURB ELEVATIONS.

20 0 5 10 20
SCALE: 1 INCH = 20 FEET

| Date | Description | No. |
|---|---|---|
| Revisions | | |

Signature Date


LANGAN
Langan Engineering and Environmental Services, LLC
1300 Wilson Blvd
Arlington, VA 22209
www.langan.com


Project

CONFIDENTIAL PROJECT

GEORGE WASHINGTON MEMORIAL PARKWAY
PAR03170001
WASHINGTON DISTRICT OF COLUMBIA

Drawing Title

GRADING PLAN

| Project No. | Drawing No. |
|---|---|
| 270228201 | CG101 |
| Date: 05/22/2026 | |
| Drawn By: AMF | |
| Checked By: RCL | |

LANGAN
Project No. 001234501

©2018 Langan

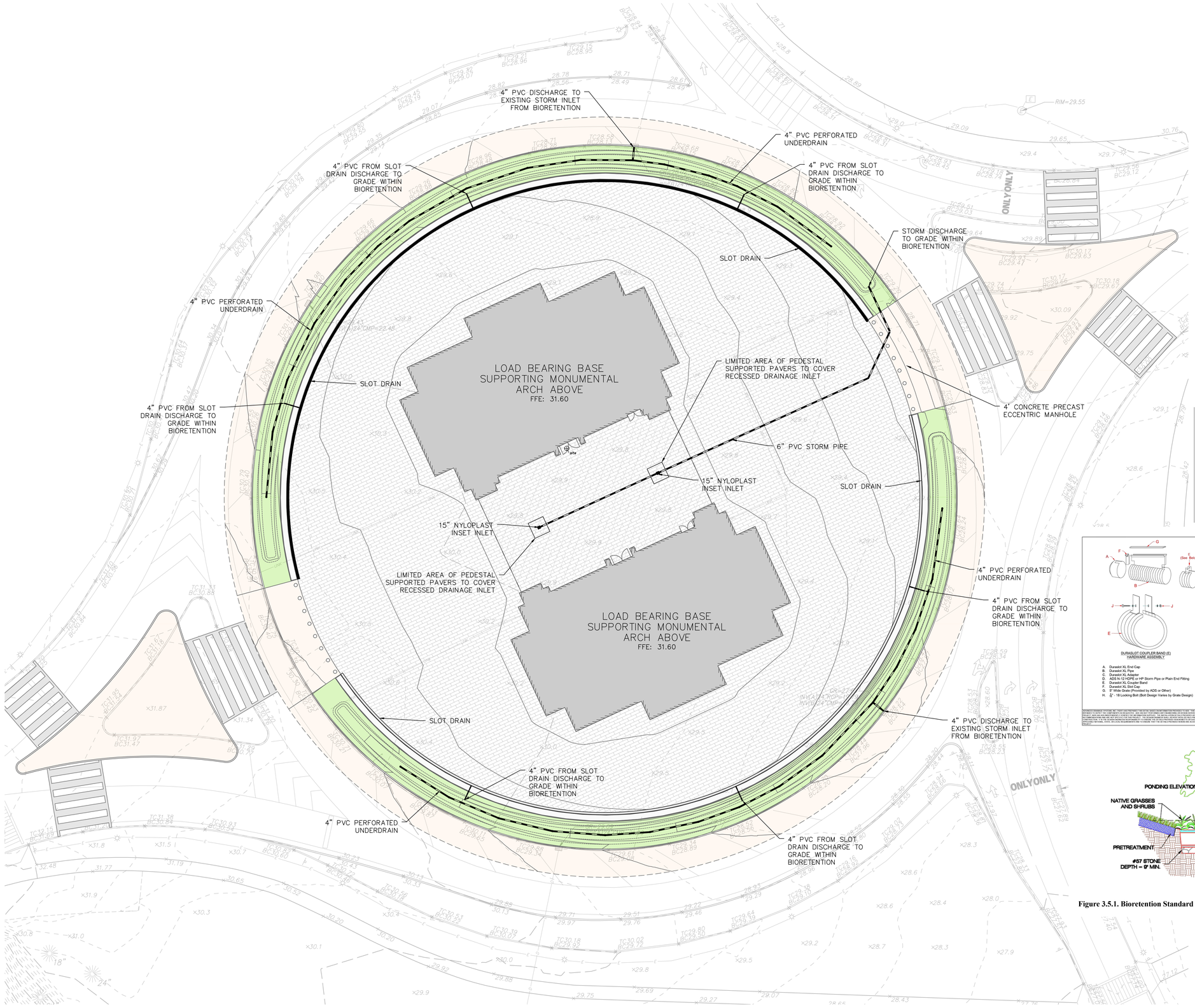
4" PVC DISCHARGE TO EXISTING STORM INLET FROM BIORETENTION
4" PVC PERFORATED UNDERDRAIN
4" PVC FROM SLOT DRAIN DISCHARGE TO GRADE WITHIN BIORETENTION
4" PVC FROM SLOT DRAIN DISCHARGE TO GRADE WITHIN BIORETENTION
STORM DISCHARGE TO GRADE WITHIN BIORETENTION
SLOT DRAIN
4" PVC PERFORATED UNDERDRAIN
LOAD BEARING BASE SUPPORTING MONUMENTAL ARCH ABOVE
FFE: 31.60
SLOT DRAIN
LIMITED AREA OF PEDESTAL SUPPORTED PAVERS TO COVER RECESSED DRAINAGE INLET
4" CONCRETE PRECAST ECCENTRIC MANHOLE
4" PVC FROM SLOT DRAIN DISCHARGE TO GRADE WITHIN BIORETENTION
6" PVC STORM PIPE
15" NYLOPLAST INSET INLET
SLOT DRAIN
15" NYLOPLAST INSET INLET
LIMITED AREA OF PEDESTAL SUPPORTED PAVERS TO COVER RECESSED DRAINAGE INLET
LOAD BEARING BASE SUPPORTING MONUMENTAL ARCH ABOVE
FFE: 31.60
4" PVC PERFORATED UNDERDRAIN
4" PVC FROM SLOT DRAIN DISCHARGE TO GRADE WITHIN BIORETENTION
SLOT DRAIN
4" PVC DISCHARGE TO EXISTING STORM INLET FROM BIORETENTION
4" PVC FROM SLOT DRAIN DISCHARGE TO GRADE WITHIN BIORETENTION
4" PVC PERFORATED UNDERDRAIN
4" PVC FROM SLOT DRAIN DISCHARGE TO GRADE WITHIN BIORETENTION
ONLY
ONLY
RIM=29.55
INVERT= 24" CMP=22.48
INVERT= 24" CMP=24.17
INVERT= 24" CMP=24.24
INVERT= 24" CMP=24.24
INVERT= 24" CMP=24.17

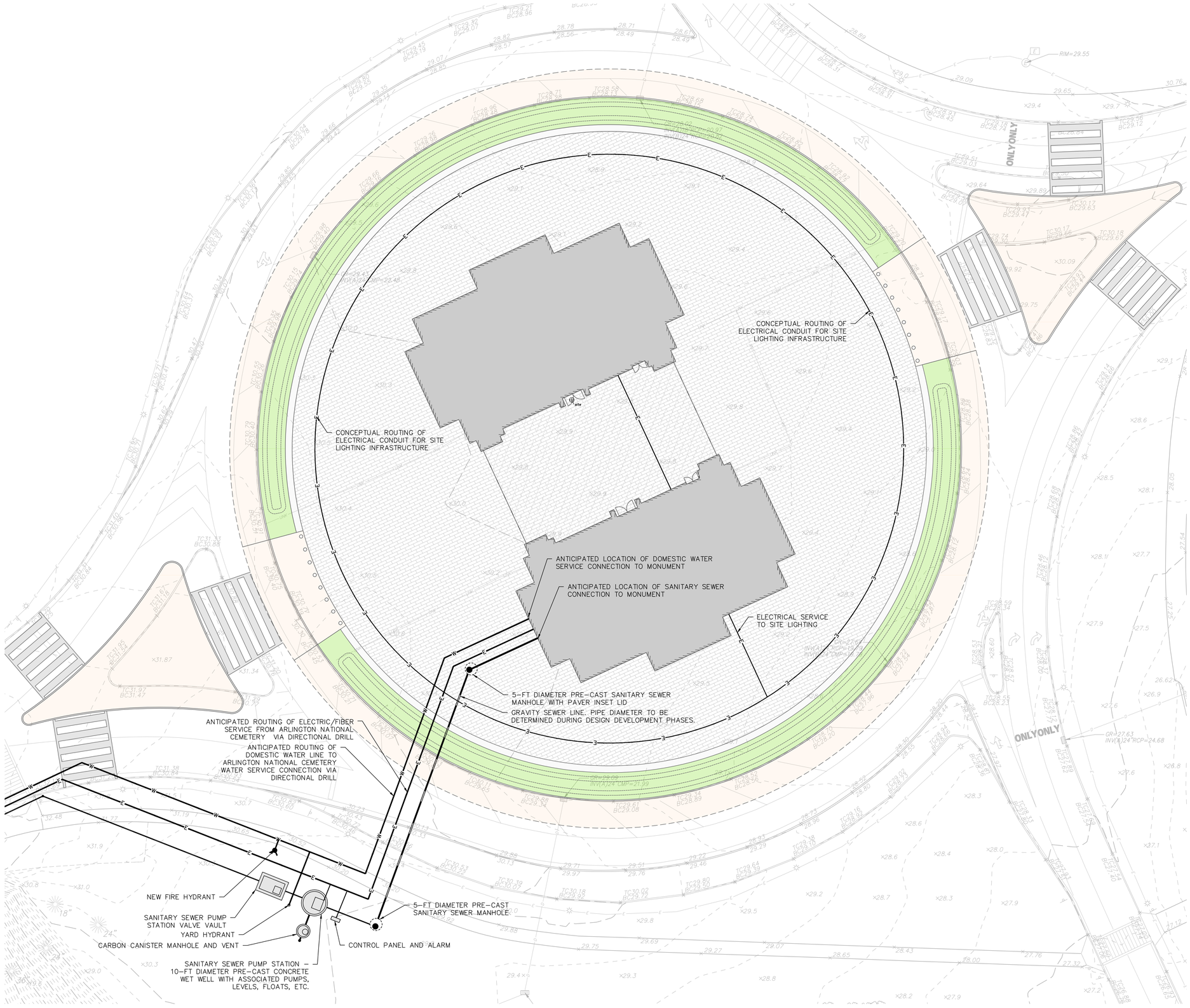


UTILITY PLAN NOTES:

1. CONTRACTOR SHALL REFER TO ARCHITECTURAL AND MEP PLANS AND SPECIFICATIONS FOR ACTUAL LOCATIONS OF ALL UTILITY ENTRANCES TO THE STRUCTURE. CONTRACTOR SHALL COORDINATE INSTALLATION OF UTILITIES IN SUCH A MANNER AS TO AVOID CONFLICTS AND ASSURE PROPER DEPTHS ARE ACHIEVED.
2. THE CONTRACTOR SHALL FIELD VERIFY ALL EXISTING CONDITIONS, UTILITY LOCATIONS, AND INVERTS PRIOR TO CONSTRUCTION. ANY CONDITIONS FOUND TO DIFFER FROM THOSE SHOWN BY THE DRAWINGS SHALL BE IMMEDIATELY BROUGHT TO THE ATTENTION OF THE ENGINEER.
3. ALL SANITARY SEWER AND WATER LINE WORK SHALL BE IN ACCORDANCE WITH THE REQUIREMENTS OF THE AUTHORITY HAVING JURISDICTION (DC WATER, ARLINGTON NATIONAL CEMETERY, NATIONAL PARK SERVICE, AND/OR ARLINGTON COUNTY.
4. ALL PLANS SHALL BE SUBMITTED TO ALL AHJs FOR REVIEW AND APPROVAL AS PART OF THE DESIGN DEVELOPMENT AND PERMITTING PROCESS.
5. CONTRACTOR SHALL PERFORM TEST PITS AT THE LOCATIONS OF ALL PROPOSED UTILITY CROSSINGS.
6. ALL UTILITY INFRASTRUCTURE THAT IS INSTALLED ABOVE GRADE (IE. SUSPENDED FROM BRIDGES) SHALL BE INSTALLED WITH INSULATION AND/OR HEAT TRACE TAPE TO ASSURE YEAR ROUND SYSTEM FUNCTIONALITY.
7. DOMESTIC WATER DEMANDS AND SANITARY SEWER LOADS HAVE NOT YET BEEN DEVELOPED BY THE MEP ENGINEER AND THE PROPOSED INFRASTRUCTURE HAS NOT YET BEEN SIZED.

SCALE: 1 INCH = 20 FEET

| Date | Description | No. |
|---|---|---|
| Revisions | | |

Signature Date


LANGAN
Langan Engineering and Environmental Services, LLC
1300 Wilson Blvd
Arlington, VA 22209
www.langan.com


Project

CONFIDENTIAL PROJECT

GEORGE WASHINGTON MEMORIAL PARKWAY
PAR03170001
WASHINGTON DISTRICT OF COLUMBIA

Drawing Title

UTILITY PLAN

| Project No. | Drawing No. |
|---|---|
| 270228201 | CU101A |
| Date: 05/29/2026 | |
| Drawn By: AMF | |
| Checked By: RCL | |

LANGAN
Project No. 001234501

©2018 Langan

Date: 5/29/2026 Time: 16:55 User: afletcher Style Table: Langan.stb Layout: Layout1 Document Code: 270228201-0301-CU101-0101

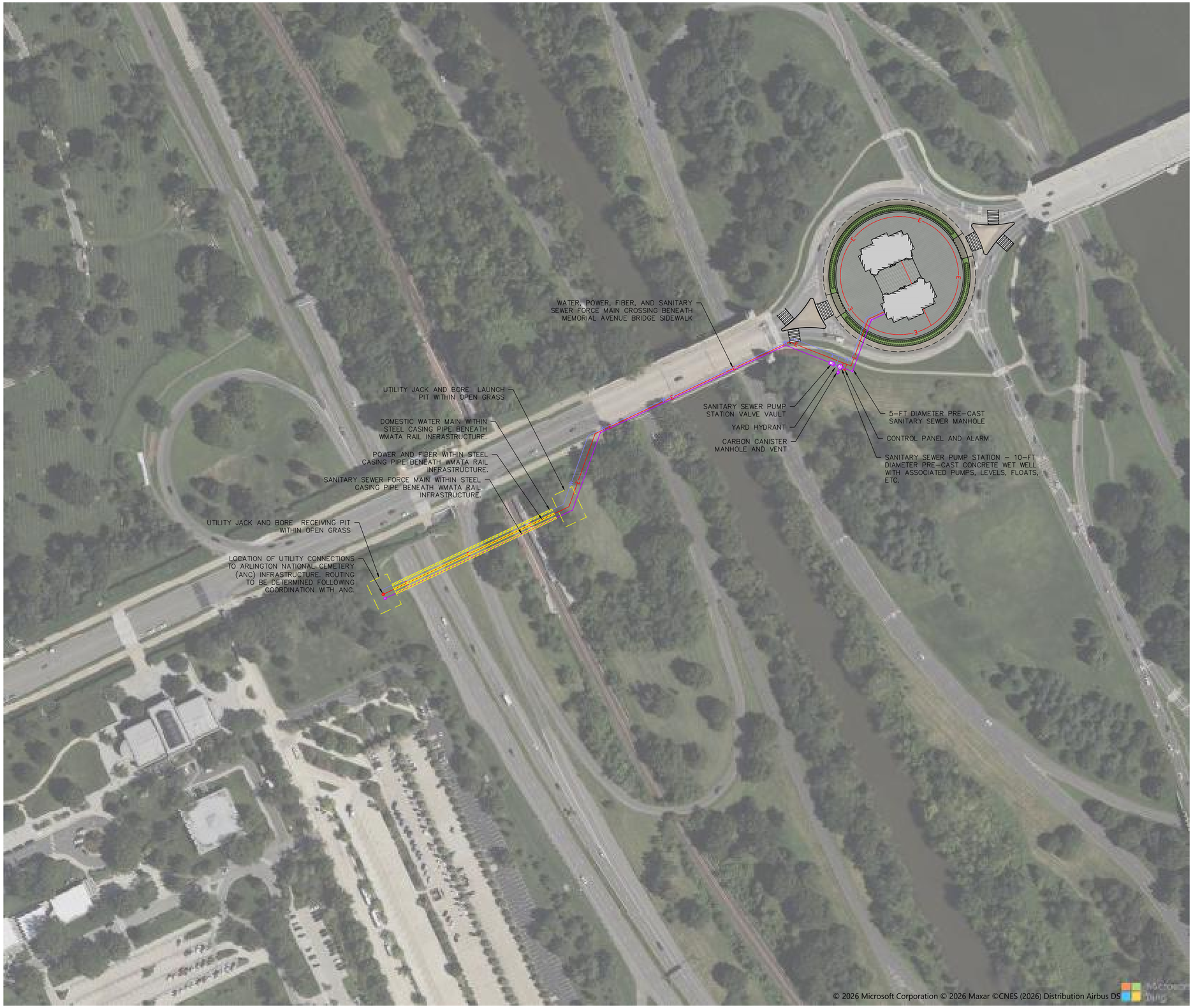


100 0 25 50 100
SCALE: 1 INCH = 100 FEET

| Date | Description | No. |
|---|---|---|

Revisions

Signature Date


LANGAN
Langan Engineering and Environmental Services, LLC
1300 Wilson Blvd
Arlington, VA 22209
www.langan.com


Project

CONFIDENTIAL PROJECT

GEORGE WASHINGTON MEMORIAL PARKWAY
PAR03170001
WASHINGTON DISTRICT OF COLUMBIA

Drawing Title

OFFSITE UTILITY ROUTING - OPTION 1

| Project No. | Drawing No. |
|---|---|
| 270228201 | CU101B |
| Date: 05/29/2026 | |
| Drawn By: AMF | |
| Checked By: RCL | |

LANGAN
Project No. 001234501

©2018 Langan

Date: 5/29/2026 Time: 16:52 User: afletcher Style Table: Langan.stb Layout: Layout1 Document Code: 270228201-0301-CU101-0102

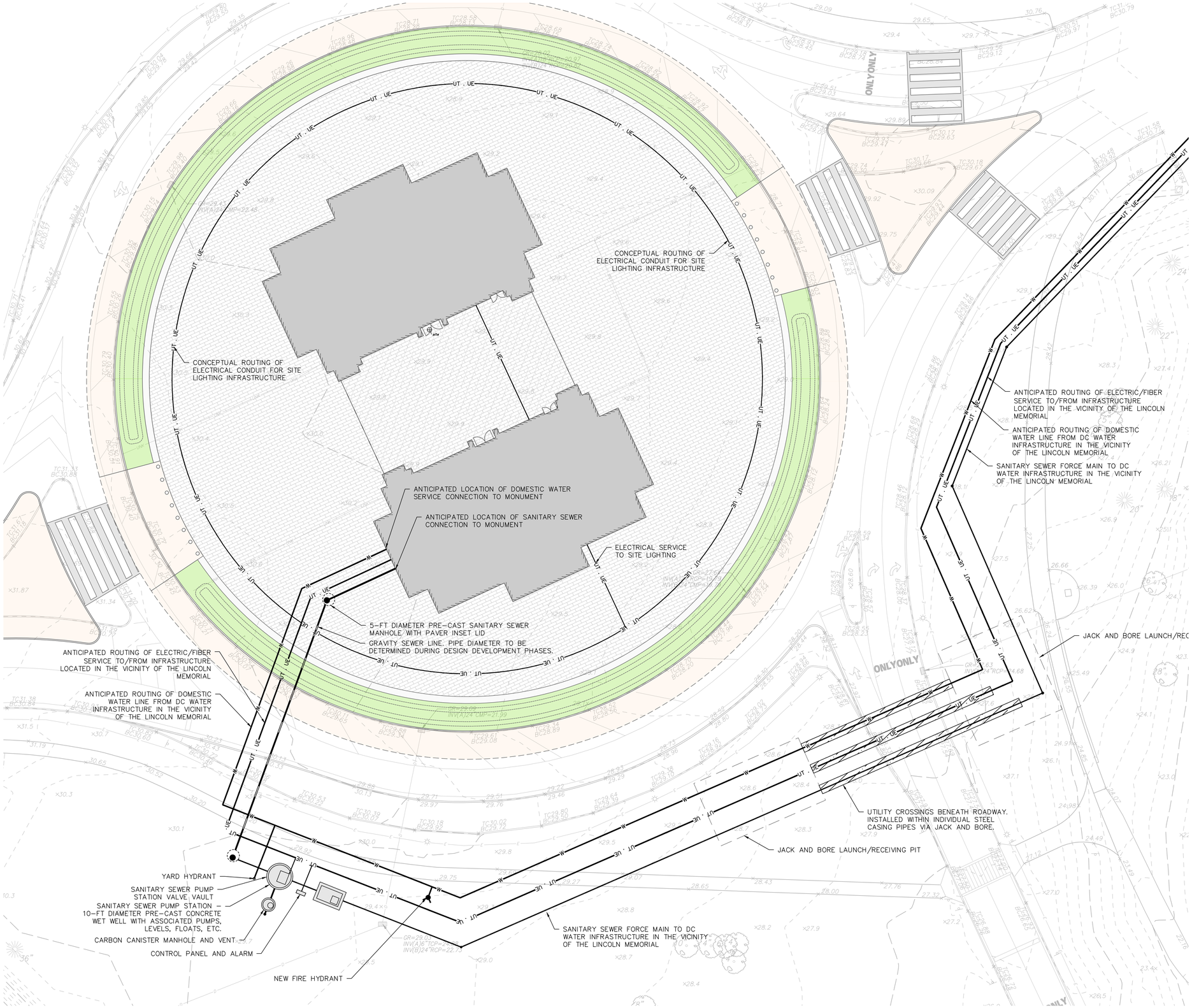


UTILITY PLAN NOTES:

1. CONTRACTOR SHALL REFER TO ARCHITECTURAL AND MEP PLANS AND SPECIFICATIONS FOR ACTUAL LOCATIONS OF ALL UTILITY ENTRANCES TO THE STRUCTURE. CONTRACTOR SHALL COORDINATE INSTALLATION OF UTILITIES IN SUCH A MANNER AS TO AVOID CONFLICTS AND ASSURE PROPER DEPTHS ARE ACHIEVED.
2. THE CONTRACTOR SHALL FIELD VERIFY ALL EXISTING CONDITIONS, UTILITY LOCATIONS, AND INVERTS PRIOR TO CONSTRUCTION. ANY CONDITIONS FOUND TO DIFFER FROM THOSE SHOWN BY THE DRAWINGS SHALL BE IMMEDIATELY BROUGHT TO THE ATTENTION OF THE ENGINEER.
3. ALL SANITARY SEWER AND WATER LINE WORK SHALL BE IN ACCORDANCE WITH THE REQUIREMENTS OF THE AUTHORITY HAVING JURISDICTION (DC WATER, ARLINGTON NATIONAL CEMETERY, NATIONAL PARK SERVICE, AND/OR ARLINGTON COUNTY.
4. ALL PLANS SHALL BE SUBMITTED TO ALL AHJs FOR REVIEW AND APPROVAL AS PART OF THE DESIGN DEVELOPMENT AND PERMITTING PROCESS.
5. CONTRACTOR SHALL PERFORM TEST PITS AT THE LOCATIONS OF ALL PROPOSED UTILITY CROSSINGS.
6. ALL UTILITY INFRASTRUCTURE THAT IS INSTALLED ABOVE GRADE (IE. SUSPENDED FROM BRIDGES) SHALL BE INSTALLED WITH INSULATION AND/OR HEAT TRACE TAPE TO ASSURE YEAR ROUND SYSTEM FUNCTIONALITY.
7. DOMESTIC WATER DEMANDS AND SANITARY SEWER LOADS HAVE NOT YET BEEN DEVELOPED BY THE MEP ENGINEER AND THE PROPOSED INFRASTRUCTURE HAS NOT YET BEEN SIZED.

| Date | Description | No. |
|---|---|---|

Revisions

Signature Date


LANGAN
Langan Engineering and Environmental Services, LLC
1300 Wilson Blvd
Arlington, VA 22209
www.langan.com


Project

CONFIDENTIAL PROJECT

GEORGE WASHINGTON MEMORIAL PARKWAY
PAR03170001
WASHINGTON DISTRICT OF COLUMBIA

Drawing Title

UTILITY PLAN

| Project No. | Drawing No. |
|---|---|
| 270228201 | CU102A |
| Date: 05/29/2026 | |
| Drawn By: AMF | |
| Checked By: RCL | |

LANGAN

Project No. 001234501

© 2018 Langan

| Date | Description | No. |
|---|---|---|

Revisions

Signature Date

**LANGAN**

Langan Engineering and Environmental Services, LLC

1300 Wilson Blvd
Arlington, VA 22209

www.langan.com

Project

# CONFIDENTIAL PROJECT

**GEORGE WASHINGTON MEMORIAL PARKWAY**
**PAR03170001**
**WASHINGTON** **DISTRICT OF COLUMBIA**

Drawing Title

# OFFSITE UTILITY ROUTING - OPTION 2

| Project No. | Drawing No. |
|---|---|
| **270228201** | **CU102B** |
| Date: **05/29/2026** | |
| Drawn By: **AMF** | |
| Checked By: **RCL** | |

LANGAN
Project No. 001234501

©2018 Langan

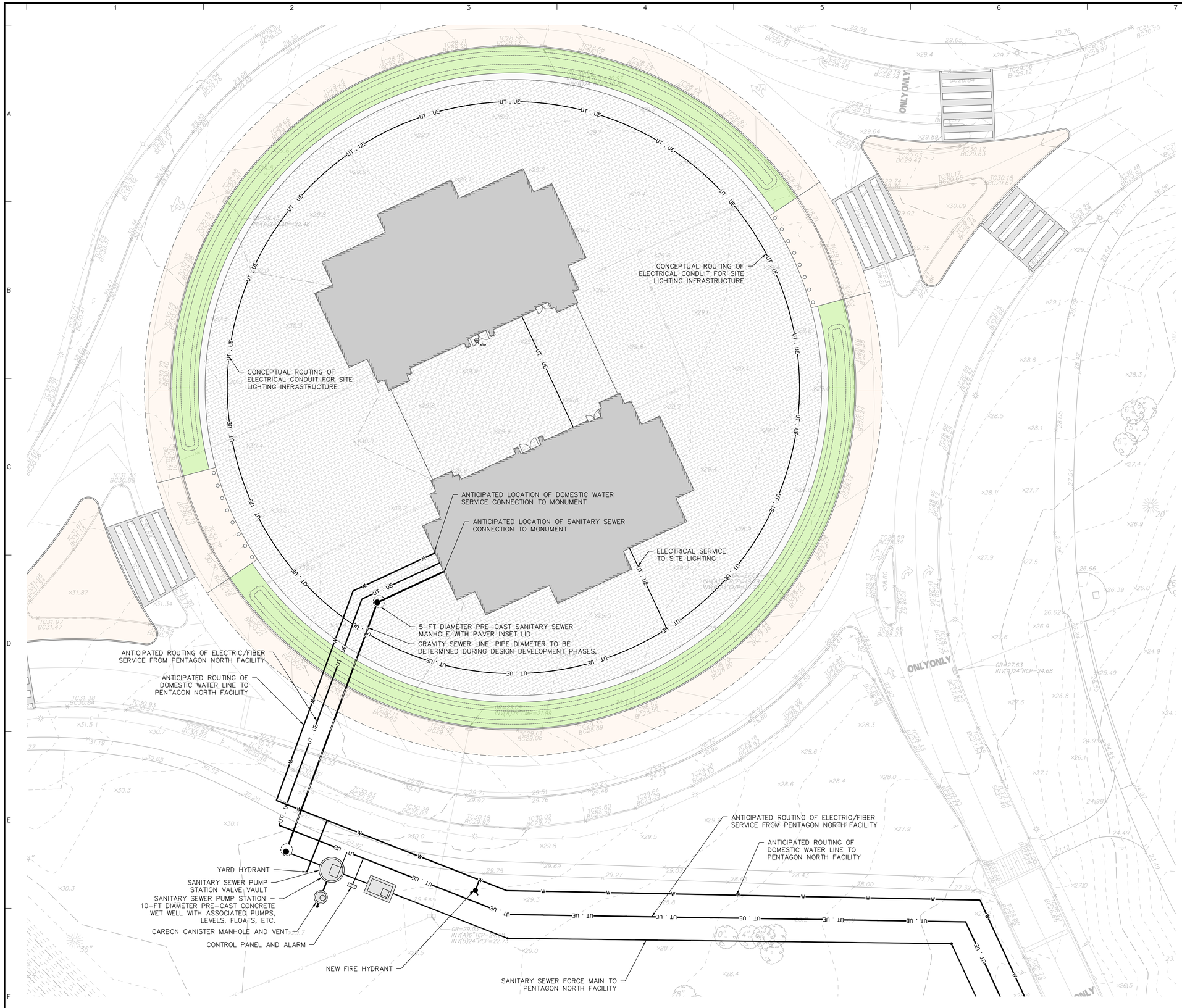


UTILITY PLAN NOTES:

1. CONTRACTOR SHALL REFER TO ARCHITECTURAL AND MEP PLANS AND SPECIFICATIONS FOR ACTUAL LOCATIONS OF ALL UTILITY ENTRANCES TO THE STRUCTURE. CONTRACTOR SHALL COORDINATE INSTALLATION OF UTILITIES IN SUCH A MANNER AS TO AVOID CONFLICTS AND ASSURE PROPER DEPTHS ARE ACHIEVED.
2. THE CONTRACTOR SHALL FIELD VERIFY ALL EXISTING CONDITIONS, UTILITY LOCATIONS, AND INVERTS PRIOR TO CONSTRUCTION. ANY CONDITIONS FOUND TO DIFFER FROM THOSE SHOWN BY THE DRAWINGS SHALL BE IMMEDIATELY BROUGHT TO THE ATTENTION OF THE ENGINEER.
3. ALL SANITARY SEWER AND WATER LINE WORK SHALL BE IN ACCORDANCE WITH THE REQUIREMENTS OF THE AUTHORITY HAVING JURISDICTION (DC WATER, ARLINGTON NATIONAL CEMETERY, NATIONAL PARK SERVICE, AND/OR ARLINGTON COUNTY.
4. ALL PLANS SHALL BE SUBMITTED TO ALL AHJs FOR REVIEW AND APPROVAL AS PART OF THE DESIGN DEVELOPMENT AND PERMITTING PROCESS.
5. CONTRACTOR SHALL PERFORM TEST PITS AT THE LOCATIONS OF ALL PROPOSED UTILITY CROSSINGS.
6. ALL UTILITY INFRASTRUCTURE THAT IS INSTALLED ABOVE GRADE (IE. SUSPENDED FROM BRIDGES) SHALL BE INSTALLED WITH INSULATION AND/OR HEAT TRACE TAPE TO ASSURE YEAR ROUND SYSTEM FUNCTIONALITY.
7. DOMESTIC WATER DEMANDS AND SANITARY SEWER LOADS HAVE NOT YET BEEN DEVELOPED BY THE MEP ENGINEER AND THE PROPOSED INFRASTRUCTURE HAS NOT YET BEEN SIZED.

20 0 5 10 20
SCALE: 1 INCH = 20 FEET

| Date | Description | No. |
|---|---|---|

Revisions

Signature Date


LANGAN
Langan Engineering and Environmental Services, LLC
1300 Wilson Blvd
Arlington, VA 22209
www.langan.com


Project

CONFIDENTIAL PROJECT

GEORGE WASHINGTON MEMORIAL PARKWAY
PAR03170001
WASHINGTON DISTRICT OF COLUMBIA

Drawing Title

UTILITY PLAN

Project No. 270228201
Date 05/29/2026
Drawn By AMF
Checked By RCL
Drawing No. CU103A

LANGAN
Project No. 001234501

© 2018 Langan

Date: 5/29/2026 Time: 17:05 User: afletcher Style Table: Langan.stb Layout: Layout1 Document Code: 270228201-0301-CU101-0107

| Date | Description | No. |
|---|---|---|

Revisions

Signature Date


LANGAN

Langan Engineering and Environmental Services, LLC

1300 Wilson Blvd
Arlington, VA 22209

www.langan.com


Project

CONFIDENTIAL PROJECT

GEORGE WASHINGTON MEMORIAL PARKWAY
PAR03170001

WASHINGTON DISTRICT OF COLUMBIA

Drawing Title

OFFSITE UTILITY ROUTING - OPTION 3

| Project No. | Drawing No. |
|---|---|
| 270228201 | CU103B |
| Date: 05/29/2026 | |
| Drawn By: AMF | |
| Checked By: RCL | |

LANGAN Project No. 001234501


©2018 Langan



Date: 5/29/2026 Time: 16:51 User: afletcher Style Table: Langan.stb Layout: Layout1 Document Code: 270228201-0301-CU101-0104

CONCEPTUAL ROUTING OF ELECTRICAL CONDUIT FOR SITE LIGHTING INFRASTRUCTURE

CONCEPTUAL ROUTING OF ELECTRICAL CONDUIT FOR SITE LIGHTING INFRASTRUCTURE

ANTICIPATED LOCATION OF DOMESTIC WATER SERVICE CONNECTION TO MONUMENT

ANTICIPATED LOCATION OF SANITARY SEWER CONNECTION TO MONUMENT

ELECTRICAL SERVICE TO SITE LIGHTING

5-FT DIAMETER PRE-CAST SANITARY SEWER MANHOLE WITH PAVER INSET LID

GRAVITY SEWER LINE. PIPE DIAMETER TO BE DETERMINED DURING DESIGN DEVELOPMENT PHASES.

ANTICIPATED ROUTING OF ELECTRIC/FIBER SERVICE FROM PENTAGON NORTH FACILITY/COLUMBIA ISLAND MARINA

ANTICIPATED ROUTING OF DOMESTIC WATER LINE TO COLUMBIA ISLAND MARINA

5-FT DIAMETER PRE-CAST SANITARY SEWER MANHOLE

YARD HYDRANT

SANITARY SEWER PUMP STATION VALVE VAULT

SANITARY SEWER PUMP STATION – 10-FT DIAMETER PRE-CAST CONCRETE WET WELL WITH ASSOCIATED PUMPS, LEVELS, FLOATS, ETC.

CARBON CANISTER MANHOLE AND VENT

CONTROL PANEL AND ALARM

NEW FIRE HYDRANT

SANITARY SEWER FORCE MAIN TO COLUMBIA ISLAND MARINA INFRASTRUCTURE

ONLY

SCALE: 1 INCH = 20 FEET

UTILITY PLAN NOTES:

1. CONTRACTOR SHALL REFER TO ARCHITECTURAL AND MEP PLANS AND SPECIFICATIONS FOR ACTUAL LOCATIONS OF ALL UTILITY ENTRANCES TO THE STRUCTURE. CONTRACTOR SHALL COORDINATE INSTALLATION OF UTILITIES IN SUCH A MANNER AS TO AVOID CONFLICTS AND ASSURE PROPER DEPTHS ARE ACHIEVED.
2. THE CONTRACTOR SHALL FIELD VERIFY ALL EXISTING CONDITIONS, UTILITY LOCATIONS, AND INVERTS PRIOR TO CONSTRUCTION. ANY CONDITIONS FOUND TO DIFFER FROM THOSE SHOWN BY THE DRAWINGS SHALL BE IMMEDIATELY BROUGHT TO THE ATTENTION OF THE ENGINEER.
3. ALL SANITARY SEWER AND WATER LINE WORK SHALL BE IN ACCORDANCE WITH THE REQUIREMENTS OF THE AUTHORITY HAVING JURISDICTION (DC WATER, ARLINGTON NATIONAL CEMETERY, NATIONAL PARK SERVICE, AND/OR ARLINGTON COUNTY.
4. ALL PLANS SHALL BE SUBMITTED TO ALL AHJs FOR REVIEW AND APPROVAL AS PART OF THE DESIGN DEVELOPMENT AND PERMITTING PROCESS.
5. CONTRACTOR SHALL PERFORM TEST PITS AT THE LOCATIONS OF ALL PROPOSED UTILITY CROSSINGS.
6. ALL UTILITY INFRASTRUCTURE THAT IS INSTALLED ABOVE GRADE (IE. SUSPENDED FROM BRIDGES) SHALL BE INSTALLED WITH INSULATION AND/OR HEAT TRACE TAPE TO ASSURE YEAR ROUND SYSTEM FUNCTIONALITY.
7. DOMESTIC WATER DEMANDS AND SANITARY SEWER LOADS HAVE NOT YET BEEN DEVELOPED BY THE MEP ENGINEER AND THE PROPOSED INFRASTRUCTURE HAS NOT YET BEEN SIZED.

| Date | Description | No. |
|---|---|---|
| Revisions | | |

Signature Date


LANGAN
Langan Engineering and Environmental Services, LLC
1300 Wilson Blvd
Arlington, VA 22209
www.langan.com


Project

CONFIDENTIAL PROJECT

GEORGE WASHINGTON MEMORIAL PARKWAY
PAR03170001
WASHINGTON DISTRICT OF COLUMBIA

Drawing Title

UTILITY PLAN

| Project No. | Drawing No. |
|---|---|
| 270228201 | CU104A |
| Date: 05/29/2026 | |
| Drawn By: AMF | |
| Checked By: RCL | |

LANGAN
Project No. 001234501

©2018 Langan

Date: 5/29/2026 Time: 17:07 User: afletcher Style Table: Langan.stb Layout: Layout1 Document Code: 270228201-0301-CU101-0108

| Date | Description | No. |
|---|---|---|

Revisions

Signature Date


LANGAN

Langan Engineering and Environmental Services, LLC

1300 Wilson Blvd
Arlington, VA 22209

www.langan.com


Project

# CONFIDENTIAL PROJECT

GEORGE WASHINGTON MEMORIAL PARKWAY
PAR03170001
WASHINGTON DISTRICT OF COLUMBIA

Drawing Title

# OFFSITE UTILITY ROUTING - OPTION 4

| Project No. | Drawing No. |
|---|---|
| 270228201 | CU104B |
| Date: 05/29/2026 | |
| Drawn By: AMF | |
| Checked By: RCL | |

LANGAN Project No. 001234501

© 2018 Langan

Date: 5/29/2026 Time: 16:50 User: afletcher Style Table: Langan.stb Layout: Layout1 Document Code: 270228201-0301-CU101-0105

NPS PMIS No. XXXXXX NPS Drwg No. XXX/XXXX

| PROJECT | SHEET NUMBER |
|---|---|
| DC NP GWMP ARCH TAR 2026 | A01 |

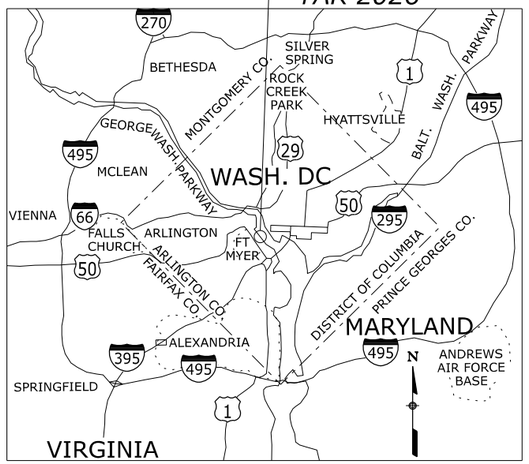


**KEYMAP**
**WASHINGTON DC**
**AND METROPOLITAN AREA**

# U. S. DEPARTMENT OF THE INTERIOR
# NATIONAL PARK SERVICE
# GEORGE WASHINGTON MEMORIAL PARKWAY
# NATIONAL PARK

PLANS FOR PROPOSED PROJECT

# DC NP GWMP ARCH TAR 2026

SIGNAL INSTALLATION AROUND THE MEMORIAL CIRCLE
TEMPORARY TRAFFIC CONTROL FOR CONSTRUCTION OF THE ARCH

WASHINGTON,
DISTRICT OF COLUMBIA

## DESCRIPTION OF PROJECT

**IMPROVEMENT:** Work includes the signalization of memorial circle, construction of new sidewalk, pavement markings and signage, maintenance of traffic for the construction of the arch, and other miscellaneous work.

**PROJECT LENGTH:** 0.03 Miles

**LANE MILES:** 0.03 Miles

| ROAD: | WIDTH | SURFACE | BASE | SUBGRADE |
|---|---|---|---|---|
| Memorial Circle | 30' | 4" ACP | 6" | N/A |

**BRIDGE:** N/A

**DESIGN DESIGNATION:**

| | |
|---|---|
| GWMP ADT (2026) | 16716 |
| GWMP ADT (2046) | 22514 |
| DHV | 3 |
| D | 50/50 |
| %Truck | 0.10% |
| V (MPH) | 30 |
| C/A | None |
| e(max) | N/A |

**SPECIFICATIONS:**

"Standard Specifications for Construction of Roads and Bridges on Federal Highway Projects", FP-24.

| Project Manager | Highway Design Manager | Lead Designer |
|---|---|---|
| XXXXX XXXXXX | Chris Burnell | Team Forge |

***DC NP GWMP ARCH TAR 2026***

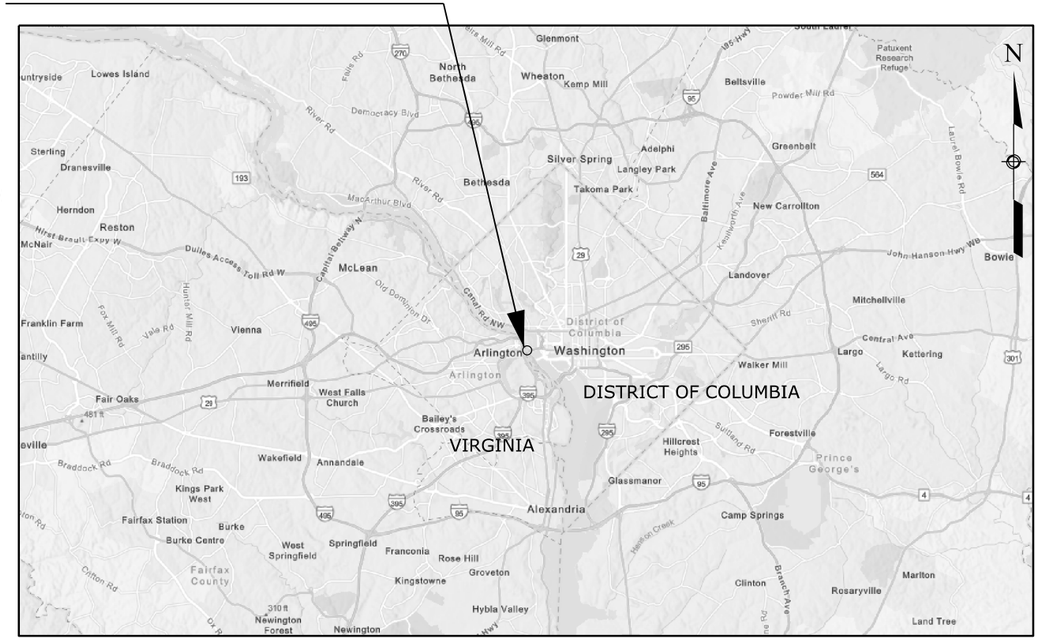


## INDEX TO SHEETS



| SHEET NO | DESCRIPTION |
|---|---|
| A01 | Title Sheet |
| A02-A03 | Symbols And Abbreviations |
| A04 | Location Map |
| B01-B03 | Typical Section |
| C01 | Tabulation of Quantities |
| D01-D05 | Plans |
| H01-H04 | Traffic Signal Plan |
| M01 | Erosion and Sediment Control Narrative |
| M02-M06 | Erosion and Sediment Plans |
| N01 | Temporary Traffic Control Narrative |
| N02-N09 | Temporary Traffic Control for Signal and Sidewalk Improvement |
| N10-N12 | Temporary Traffic Control for the Construction of the Arch |
| P01-P03 | Pavement Marking and Signing Plan |
| S01-S22 | Standards And Details |



Know what's **below.**
**Call** before you dig.

# 30% PLANS

PLANS PREPARED BY
**U.S. DEPARTMENT OF TRANSPORTATION**
**FEDERAL HIGHWAY ADMINISTRATION**
EASTERN FEDERAL LANDS HIGHWAY DIVISION
ASHBURN, VIRGINIA
MAY, 2026

M:\PROJECTS\gwmp\11(4)\Proj_Dev\CADD\AMC Arch\A01-Memorial Circle_ttl.dgn [Title Sheet NPS]
21 May 2026 6:11 PM

| PROJECT | SHEET NUMBER |
|---|---|
| DC NP GWMP ARCH TAR 2026 | A02 |

| | |
|---|---|
| Δ | total central angle |
| Δc | curve central angle |
| Ø | diameter |
| θs | spiral central angle |
| abut. | abutment |
| ACP | asphalt concrete pavement |
| ADT | average daily traffic |
| Agg | aggregate |
| AH | ahead |
| AMD | amendment |
| appr. | approach |
| ASC | aggregate surface course |
| Asph | asphalt |
| BK | back |
| BL | baseline |
| bldg. | building |
| BM | bench mark |
| BP | balance point |
| br. | bridge |
| brg. | bearing |
| BW | broken white |
| cc or c. to c. | center to center |
| CL | centerline |
| CMP | corrugated metal pipe |
| col. | column |
| conc. | concrete |
| conn. | connection |
| constr. jt. | construction joint |
| cont. | continuous |
| CS | curve to spiral |
| ctrs. | centers |
| D | directional distribution factor |
| DHV | design hourly volume |
| dia. | diameter |
| diag. | diagonal |
| diaph. | diaphragm |
| dist. | distance |
| drwg(s). | drawing(s) |
| DSY | double solid yellow |
| DW or DTW | dotted white |
| DY or DTY | dotted yellow |
| E | east |
| e | superelevation rate |
| elec. | electric |
| elev. | elevation |
| emb. | embankment |
| EOP | edge of pavement |
| EOS | edge of shoulder |
| EOT | edge of travel way |
| EQ or eq. | equation |
| ER | edge of road |
| ESAL | equivalent single axle load |
| EW | edge of water |
| ex. or exist. | existing |
| exc. | excavation |
| exp. jt. | expansion joint |
| fin. | finish |
| flg. | flange |
| ftg. | footing |
| ga. | gage (gauge) |
| GAB | graded aggregate base |
| galv. | galvanized |
| gnd or grnd | ground |
| hdwl. | headwall |
| hex. | hexagon |
| HLSD | headlight sight distance |
| HW | high water |
| ID | inside diameter |
| INF | infinite |
| inv. | invert |
| jt. | joint |
| K | K-Value |
| L | length of curve |
| lam. | lamination |
| lat. | latitude |
| LOD | Limits of Disturbance |
| long. | longitudinal |
| LPSM | lump sum |
| Ls | length of spiral |
| lt. or LT | left |
| LW | low water |
| ML | main line |
| MOD | modification |
| MP | mile post |
| max. | maximum |
| min. | minimum |
| mon. | monument |
| N | north |
| NC | normal crown |
| NMSA | nominal maximum size aggregate |
| No. | number |
| o. c. | on center |
| ohwm | ordinary high water mark |
| o. to o. | out to out |
| OD | outside diameter |
| OG | original ground |
| PC | point of curve |
| PCC | point of compound curve |
| PCS | point of curve to spiral |
| PGL | profile grade line |
| PI | point of intersection |
| pl. | plate |
| POB | point of beginning |
| POC | point on curve |
| POE | point of ending |
| POS | point on spiral |
| POT | point on tangent |
| prop. | proposed |
| PS | point of tangent to spiral |
| PSC | point of spiral to curve |
| PST | point of spiral to tangent |
| PT | point of tangent |
| pvmt. | pavement |
| R | radius |
| R. | range |
| R/W | right-of-way |
| rdwy. | roadway |
| RECP | rolled erosion control product |
| reinf. | reinforcement |
| reqd. | required |
| rt. or RT | right |
| rte. | route |
| S | south |
| SADT | seasonal average daily traffic |
| SC | point of spiral to curve |
| sec. | section |
| shldr. | shoulder |
| spa. | spacing, spaces or spaced |
| sqft | square foot |
| sqyd | square yard |
| SRS | point of spiral to reverse spiral |
| SS | point of spiral to spiral (no curve) |
| SSD | stopping sight distance |
| ST | point of spiral to tangent |
| Sta. | station |
| std. | standard |
| stgr. | stringer |
| stiff. | stiffener |
| struc. | structural |
| STS | point of spiral to tangent spiral |
| SW or SDW | solid white |
| sym. | symmetrical |
| S/W | sidewalk |
| T | tangent distance |
| T. | township |
| TBM | temporary bench mark |
| thd. | thread |
| traf. | traffic |
| TS | point of tangent to spiral |
| Ts | tangent distance (spiraled curve) |
| typ. | typical |
| V | design speed |
| VC | vertical curve |
| var. | varies |
| vph | vehicles per hour |
| VPI | vertical point of intersection |
| W | west |

Control Point (Terrestrial and GPS); Jump Hub

National Boundary

State Boundary

County Boundary

City Boundary

Township or Range Line

Section Line

Section Corner (Found, Projected)

¼ Section Line

¼ Section Corner (Found, Projected)

1/16 Section Line

1/16 Section Corner (Found, Projected)

Property Line w/Found Property Corner

Parcel Number

National Park Boundary

National Forest Boundary

National Wildlife Refuge Boundary

BLM Lands Boundary

Indian Reservation Boundary

Existing Roadway (Road, Paved, Gravel)

Railroad

Trail

Intermittent Drainage or Small Creek

Large Creek or River

Lake, Pond or Reservoir

Spring or Seep

Treeline; Individual Trees

Material Source; Bore Hole; Test Pit

Spot Elevation; Coordinate Grid Tick

| NO. | DATE | BY | REVISIONS |
|---|---|---|---|
| | | | |
| | | | |
| | | | |
| | | | |

U.S. DEPARTMENT OF TRANSPORTATION
FEDERAL HIGHWAY ADMINISTRATION
OFFICE OF FEDERAL LANDS HIGHWAY

GEORGE WASHINGTON MEMORIAL PARKWAY

# SYMBOLS AND ABBREVIATIONS



M:\PROJECTS\gwmp\11(4)\Proj_Dev\CADD\ANC Arch\A02-A03-Memorial Circle_sym.dgn [SHEET 1]
21 May 2026 6:11 PM

| PROJECT | SHEET NUMBER |
|---|---|
| DC NP GWMP ARCH TAR 2026 | A03 |

North Arrow

| | | EXISTING | PROPOSED |
|---|---|---|---|
| Slope Stake Limits | Top of Cut | | |
| | Toe of Fill | | |
| | Transition | | |
| Fence | | | |
| Gate with Fence | | | |
| Cattleguard | | | |
| Guardrail | | | |
| Concrete Barrier | | | |
| Retaining Wall | | | |
| Signs (single, double post; portable) | | | |
| Delineators | | | |
| Pipe Culvert (arrow shows flow) | | | |
| Pipe Culvert with End Section | | | |
| Pipe Culvert with Headwall | | | |
| Pipe Culvert with Drop Inlet | | | DI |
| Box Culvert | | | |
| Underdrain | | UD | UD |
| Overhead/Above Ground Utilities | | P | P |
| Underground Utilities | | W | W |

FM = force main, FO = fiber optic, G = gas, IRR = irrigation, O = oil,
P = power, SA = sanitary sewer, SD = storm drain, SS = storm sewer,
STEAM = steam, T = telephone, TV = CATV, W = water

Poles (Power, Telephone, Joint Use, Light, Support w/Anchor)

Miscellaneous Utility Features

EM = electric meter, T = telephone pedestal, TV = CATV pedestal,
UP = transformer or junction box, WF = water fountain

Building

Right-of-Way Line with Monument — r/w — R/W

Permanent Easement — P/E — P/E

Construction Easement — TCE

Riprap

AREA PATTERN

Pavement Removal / Roadway Obliteration

Sidewalk Asphalt/Concrete

Mill and Overlay

Overlay

Silt Fence — SF

Diversion Berm — DB

Drainage Divide

Check Dam

Limits of Disturbance — LOD LOD LOD

Fiber Roll or Wattle

PROJECT SPECIFIC SYMBOLS AND ABBREVIATIONS:

Proposed Traffic Signal Pole

Proposed Pedestrian Pedestal

| | |
|---|---|
| DW | Dotted white |
| SSW | Single solid white |
| SSY | Single solid yellow |
| RPM | Raised Pavement Markers |

M:\PROJECTS\gwmp\111(4)\Proj_Dev\CADD\AMC Arch\A02-A03-Memorial Circle_sym.dgn [SHEET 2]

21 May 2026 6:11 PM

| NO. | DATE | BY | REVISIONS |
|---|---|---|---|
| | | | |
| | | | |
| | | | |
| | | | |

U.S. DEPARTMENT OF TRANSPORTATION
FEDERAL HIGHWAY ADMINISTRATION
OFFICE OF FEDERAL LANDS HIGHWAY

GEORGE WASHINGTON MEMORIAL PARKWAY

# SYMBOLS AND ABBREVIATIONS

NPS PMIS No. XXXXXX NPS Drwg No. XXX/XXXX

| PROJECT | SHEET NUMBER |
|---|---|
| DC NP GWMP ARCH TAR 2026 | A04 |

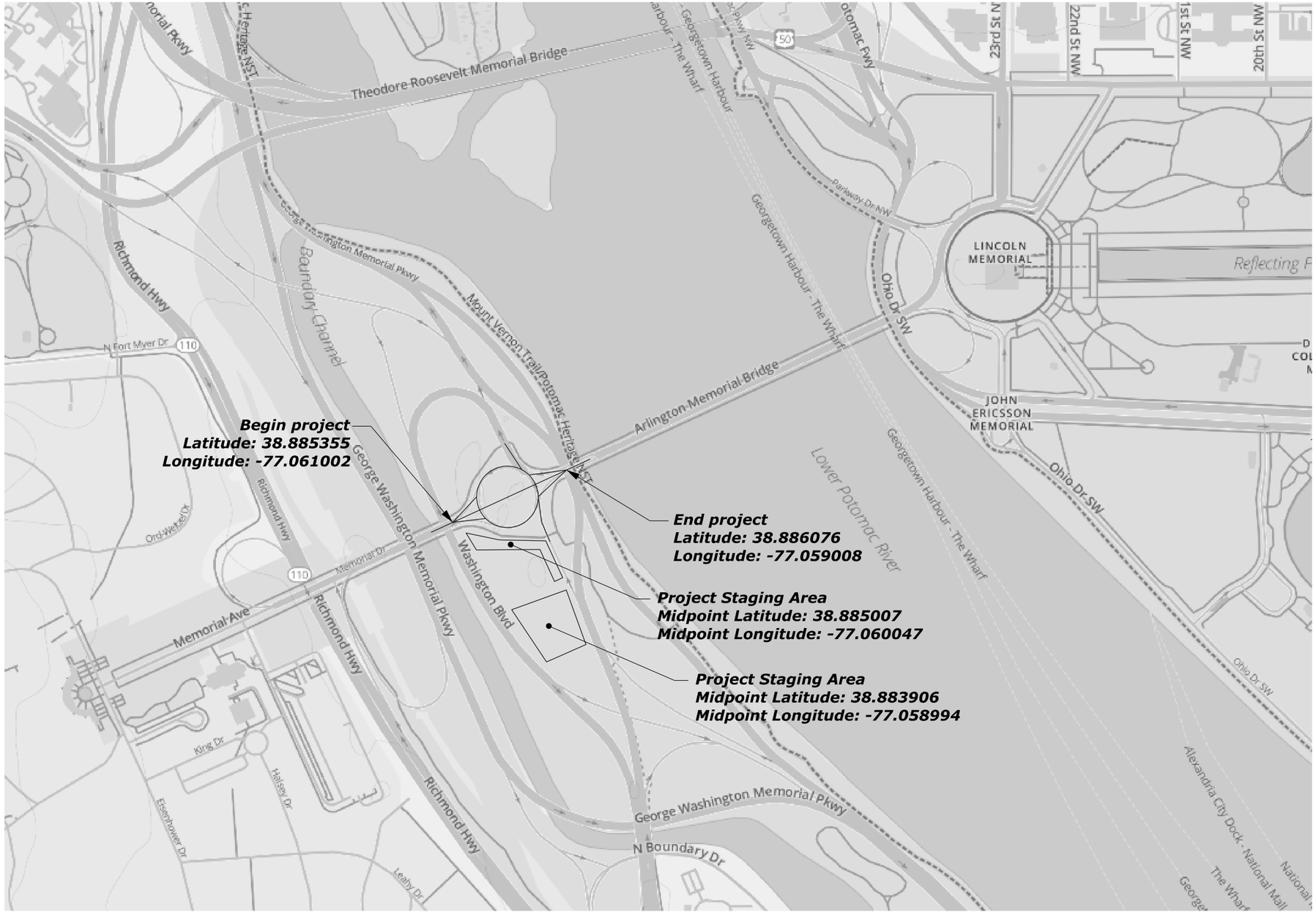


*Note:*
*Final staging area limits as directed.*

| NO. | DATE | BY | REVISIONS |
|---|---|---|---|
| | | | |
| | | | |
| | | | |
| | | | |

U.S. DEPARTMENT OF TRANSPORTATION
FEDERAL HIGHWAY ADMINISTRATION
OFFICE OF FEDERAL LANDS HIGHWAY

*NO SCALE*

GEORGE WASHINGTON MEMORIAL PARKWAY

# LOCATION MAP

M:\PROJECTS\gwmp\11(4)\Proj_Dev\CADD\ANC Arch\A04-Memorial Circle_loc.dgn [Location SHEET]
21 May 2026 7:04 PM

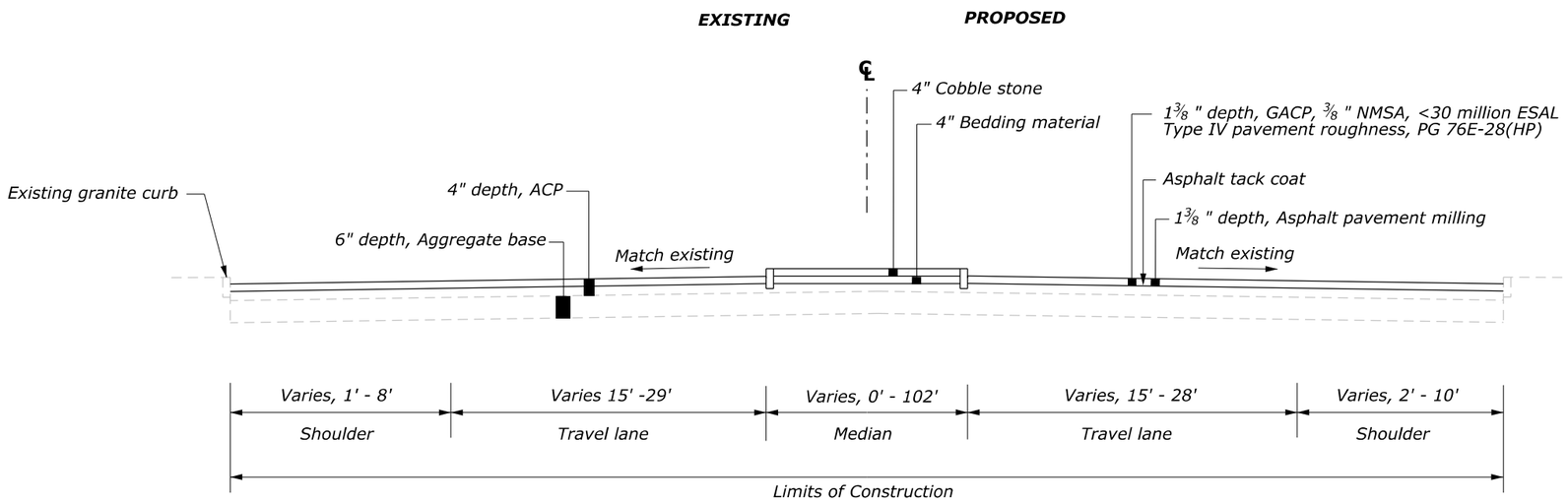


## MEMORIAL AVENUE BRIDGE TO MEMORIAL CIRCLE

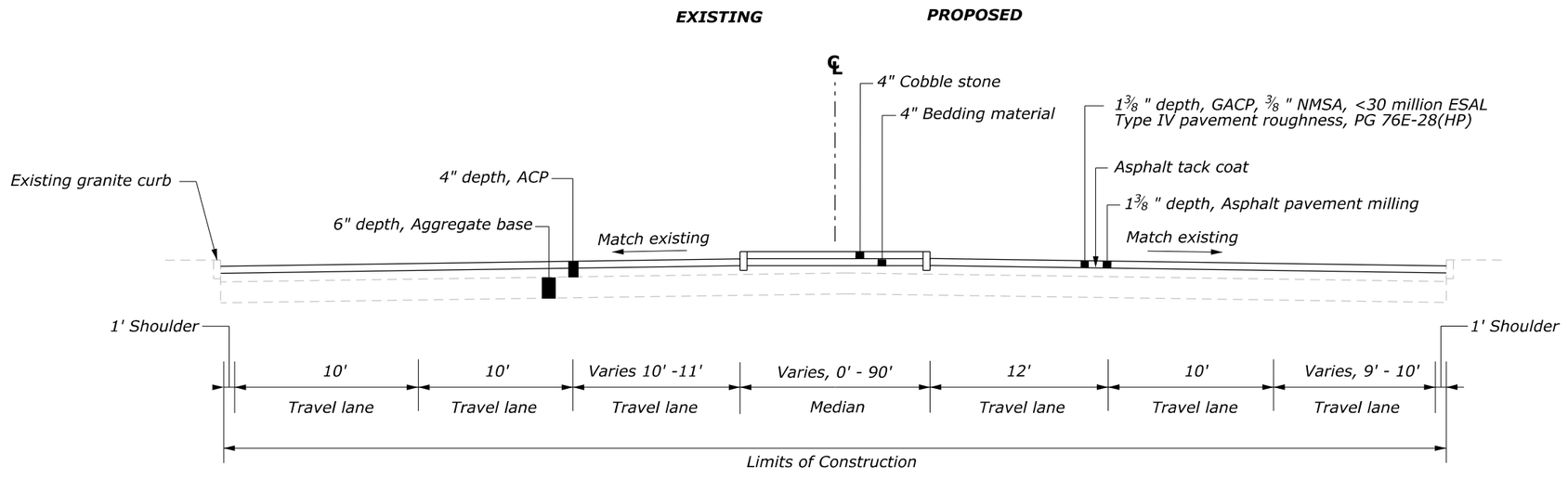


## MEMORIAL CIRCLE TO ARLINGTON MEMORIAL BRIDGE

| NO. | DATE | BY | REVISIONS |
|---|---|---|---|
| | | | |
| | | | |
| | | | |
| | | | |

U.S. DEPARTMENT OF TRANSPORTATION
FEDERAL HIGHWAY ADMINISTRATION
OFFICE OF FEDERAL LANDS HIGHWAY

GEORGE WASHINGTON MEMORIAL PARKWAY

# TYPICAL SECTIONS

MEMORIAL CIRCLE, ARLINGTON MEMORIAL BRIDGE
SCHEDULE A

M:\PROJECTS\gwmp\111(4)\Proj_Dev\CADD\AMC Arch\B01-Memorial Circle_typ.dgn [Design InfiPl]
21 May 2026 6:13 PM

| PROJECT | SHEET NUMBER |
|---|---|
| DC NP GWMP ARCH TAR 2026 | B02 |

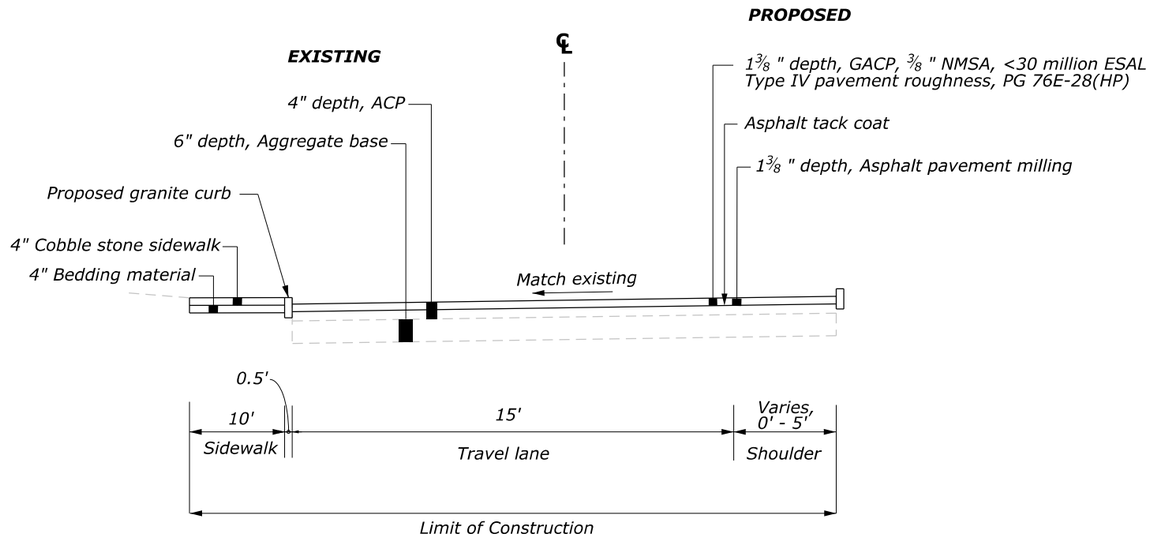


## MEMORIAL CIRCLE

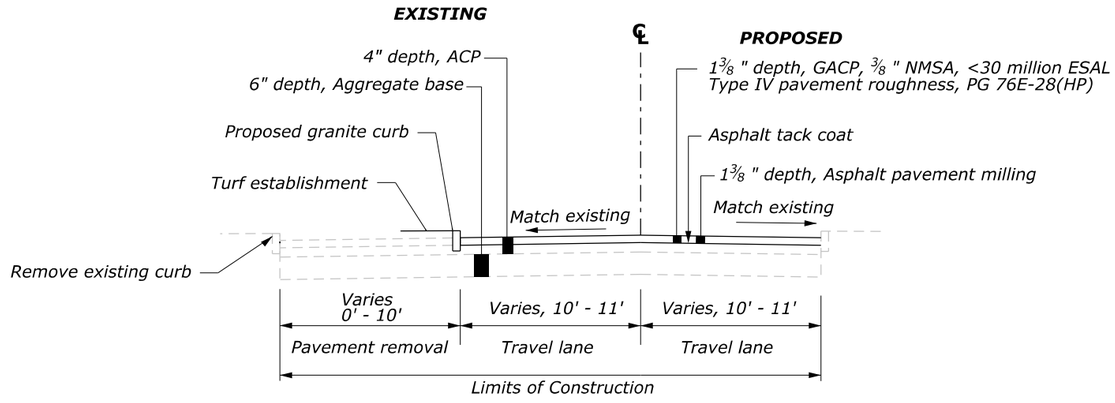


## WASHINGTON BLVD

| NO. | DATE | BY | REVISIONS |
|---|---|---|---|
| | | | |
| | | | |
| | | | |
| | | | |

U.S. DEPARTMENT OF TRANSPORTATION
FEDERAL HIGHWAY ADMINISTRATION
OFFICE OF FEDERAL LANDS HIGHWAY

GEORGE WASHINGTON MEMORIAL PARKWAY

# TYPICAL SECTIONS

MEMORIAL CIRCLE, WASHINGTON BLVD
SCHEDULE A

M:\PROJECTS\gwmp\111(4)\Proj_Dev\CADD\AMC Arch\B01-Memorial Circle_typ.dgn [Design InfiPt]
21 May 2026 6:13 PM

NPS PMIS No. XXXXXX NPS Drwg No. XXX/XXXX

| PROJECT | SHEET NUMBER |
|---|---|
| DC NP GWMP ARCH TAR 2026 | B03 |

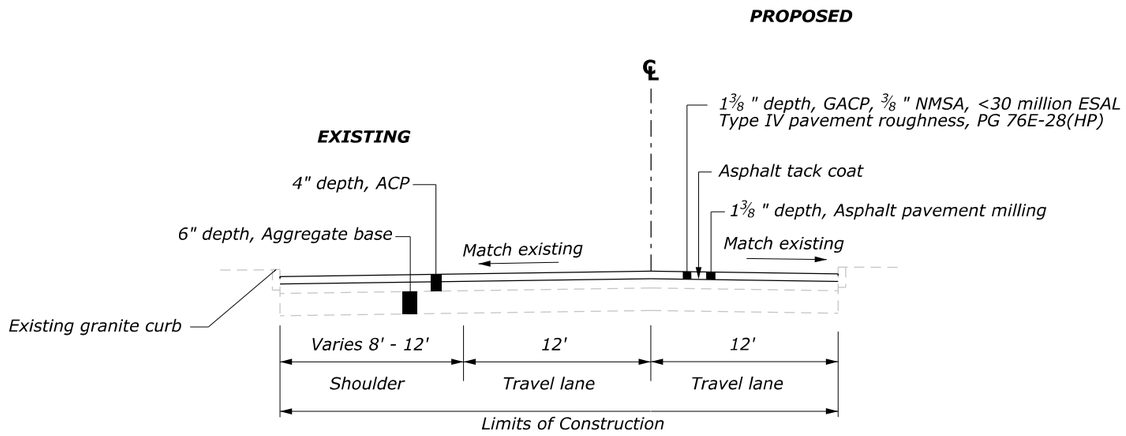


## ARLINGTON BLVD

M:\PROJECTS\gwmp\111(4)\Proj_Dev\CADD\AMC Arch\801-Memorial Circle_typ.dgn [Design Ind#1]

21 May 2026 6:13 PM

| NO. | DATE | BY | REVISIONS |
|---|---|---|---|
| | | | |
| | | | |
| | | | |
| | | | |

U.S. DEPARTMENT OF TRANSPORTATION
FEDERAL HIGHWAY ADMINISTRATION
OFFICE OF FEDERAL LANDS HIGHWAY

GEORGE WASHINGTON MEMORIAL PARKWAY

# TYPICAL SECTIONS

ARLINGTON BLVD

SCHEDULE A

| PROJECT | SHEET NUMBER |
|---|---|
| DC NP GWMP ARCH TAR 2026 | C01 |

## SCHEDULE A

| Line Item No. | Pay Item No. | Pay Item Description | Unit | Estimated Quantities |
|---|---|---|---|---|
| | | | | Bid Schedule |
| A0100 | 15101-0000 | MOBILIZATION | LPSM | ALL |
| A0150 | 15201-0000 | CONSTRUCTION SURVEY AND STAKING | LPSM | ALL |
| A0200 | 15401-0000 | CONTRACTOR TESTING | LPSM | ALL |
| A0250 | 15701-0000 | SOIL EROSION CONTROL | LPSM | ALL |
| A0300 | 15720-0000 | STORMWATER POLLUTION PREVENTION PLAN | LPSM | ALL |
| A0350 | 20301-2400 | REMOVAL OF SIGN | EACH | 32 |
| A0400 | 20302-0600 | REMOVAL OF CURB, STONE | LNFT | 2,600 |
| A0450 | 20303-0500 | REMOVAL OF GRANITE COBBLES | SQYD | 1,700 |
| A0500 | 20303-1600 | REMOVAL OF PAVEMENT, ASPHALT | SQYD | 1,400 |
| A0550 | 20303-3200 | REMOVAL OF SIDEWALK, CONCRETE | SQYD | 2,100 |
| A0600 | 20303-3300 | REMOVAL OF SIDEWALK, STONE | SQYD | 60 |
| A0650 | 31302-0000 | AGGREGATE-TOPSOIL COURSE | SQYD | 1,200 |
| A0700 | 40101-0200 | ASPHALT CONCRETE PAVEMENT, GYRATORY MIX, 3/8-INCH NOMINAL MAXIMUM SIZE AGGREGATE, 0.3 TO <3 MILLION ESAL | TON | 510 |
| A0750 | 41201-0000 | TACK COAT | TON | 4 |
| A0800 | 41301-0000 | ASPHALT PAVEMENT MILLING | SQYD | 6,800 |
| A0850 | 60901-4000 | CURB, STONE, TYPE 1, 16-INCH DEPTH | LNFT | 3,000 |
| A0900 | 61001-0500 | SIDEWALK, EXPOSED AGGREGATE CONCRETE | SQYD | 2,300 |
| A0950 | 61004-4000 | ACCESSIBILITY RAMP, STONE | SQYD | 370 |
| A1000 | 61006-2000 | PAVING, COBBLESTONE | SQYD | 1,950 |
| A1050 | 61008-0100 | RESET COBBLESTONE PAVERS | SQYD | 1,150 |
| A1100 | 62502-0000 | TURF ESTABLISHMENT | SQYD | 1,050 |
| A1150 | 63304-0900 | SIGNS, ALUMINUM PANELS, TYPE 3 SHEETING | SQFT | 16 |
| A1200 | 63316-1000 | REMOVE AND RESET SIGN SYSTEM | EACH | 2 |
| A1250 | 63401-1500 | PAVEMENT MARKINGS, TYPE H, SOLID | LNFT | 19,900 |
| A1300 | 63401-1650 | PAVEMENT MARKINGS, TYPE H, DOTTED | LNFT | 24 |
| A1350 | 63405-2900 | PAVEMENT MARKINGS, TYPE H, TURN ARROW | EACH | 4 |
| A1400 | 63405-2950 | PAVEMENT MARKINGS, TYPE H, STRAIGHT ARROW | EACH | 1 |
| A1450 | 63405-3000 | PAVEMENT MARKINGS, TYPE H, STRAIGHT/TURN ARROW COMBINATION | EACH | 3 |
| A1500 | 63405-3050 | PAVEMENT MARKINGS, TYPE H, "ONLY" WORD MESSAGE | EACH | 4 |
| A1550 | 63406-0300 | RAISED PAVEMENT MARKER, NON-PLOWABLE, MONO-DIRECTIONAL REFLECTIVE | EACH | 12 |
| A1600 | 63501-0000 | TEMPORARY TRAFFIC CONTROL | LPSM | ALL |
| A1650 | 63602-1000 | SYSTEM INSTALLATION, TRAFFIC SIGNAL | EACH | 48 |
| A1700 | 63701-0000 | FIELD OFFICE | EACH | 1 |

| NO. | DATE | BY | REVISIONS |
|---|---|---|---|
| | | | |
| | | | |
| | | | |
| | | | |

U.S. DEPARTMENT OF TRANSPORTATION
FEDERAL HIGHWAY ADMINISTRATION
OFFICE OF FEDERAL LANDS HIGHWAY

GEORGE WASHINGTON MEMORIAL PARKWAY

**TABULATION OF QUANTITIES**
SCHEDULE A

M:\PROJECTS\gwmp\11(4)\Proj_Dev\CADD\AMC Arch\C01-Memorial Circle_qty.dgn [Quantity Tabulation Sheet]
21 May 2026 7:31 PM

| PROJECT | SHEET NUMBER |
|---|---|
| | D02 |

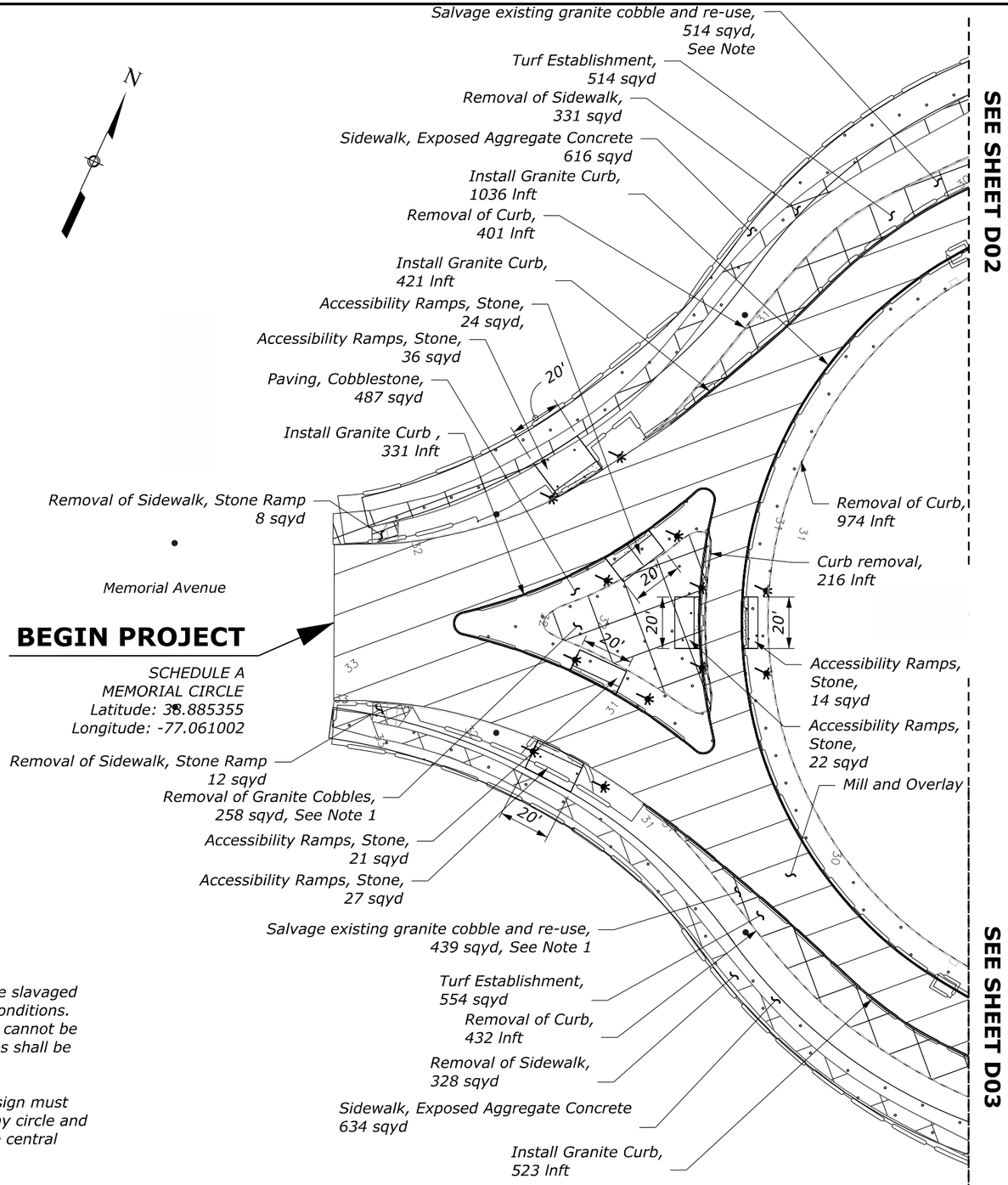


## NOTES

1. *All existing granite cobbles are to be slavaged and re-used as shown in poposed conditions. If the cobbles are not salvagable or cannot be used in proposed conditions, cobbles shall be returned to the NPS.*

2. *Utility and drainage layouts and design must be coordinated between the roadway circle and any planned construction within the central island.*

| NO. | DATE | BY | REVISIONS |
|---|---|---|---|
| | | | |
| | | | |
| | | | |
| | | | |

U.S. DEPARTMENT OF TRANSPORTATION
FEDERAL HIGHWAY ADMINISTRATION
OFFICE OF FEDERAL LANDS HIGHWAY

0 25 50
SCALE IN FEET

# CONSTRUCTION PLAN

MEMORIAL CIRCLE

M:\PROJECTS\gwmp\11(4)\Proj_Dev\CADD\AMC Arch\D_sheets_MemorialCircle.dgn [D01 (SHEET)]
21 May 2026 6:46 PM

| PROJECT | SHEET NUMBER |
|---|---|
| | D02 |

## NOTES

1. *All existing granite cobbles are to be slavaged and re-used as shown in poposed conditions. If the cobbles are not salvagable or cannot be used in proposed conditions, cobbles shall be returned to the NPS.*

2. *Utility and drainage layouts and design must be coordinated between the roadway circle and any planned construction within the central island.*

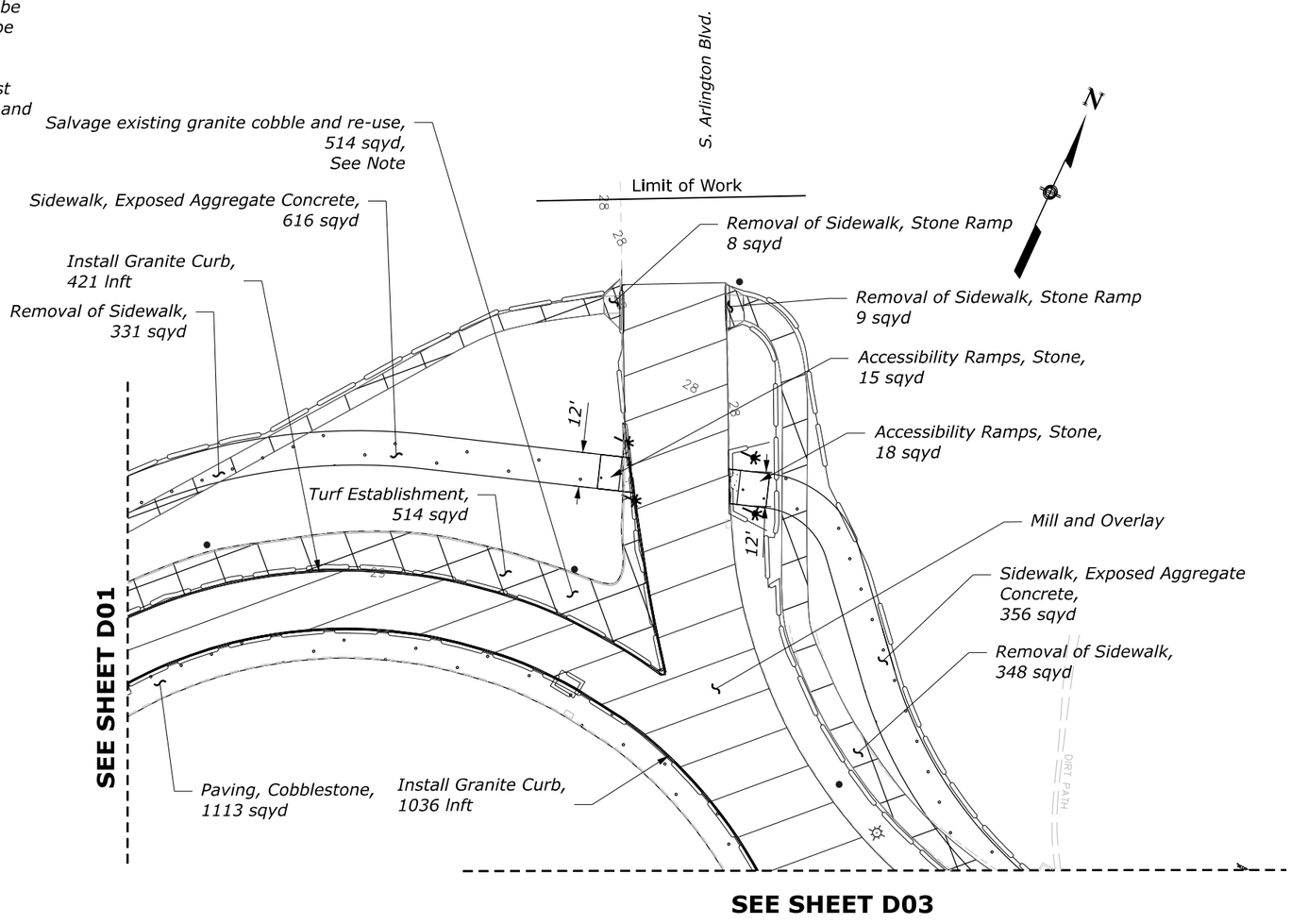


| NO. | DATE | BY | REVISIONS |
|---|---|---|---|
| | | | |
| | | | |
| | | | |
| | | | |

U.S. DEPARTMENT OF TRANSPORTATION
FEDERAL HIGHWAY ADMINISTRATION
OFFICE OF FEDERAL LANDS HIGHWAY

0 25 50
SCALE IN FEET

# CONSTRUCTION PLAN

MEMORIAL CIRCLE

S. ARLINGTON BLVD

M:\PROJECTS\gwmp\111(4)\Proj_Dev\CADD\AMC Arch\D_sheets_Memorial Circle.dgn [D02 SHEET]
21 May 2026 6:46 PM

| PROJECT | SHEET NUMBER |
|---|---|
| | D03 |

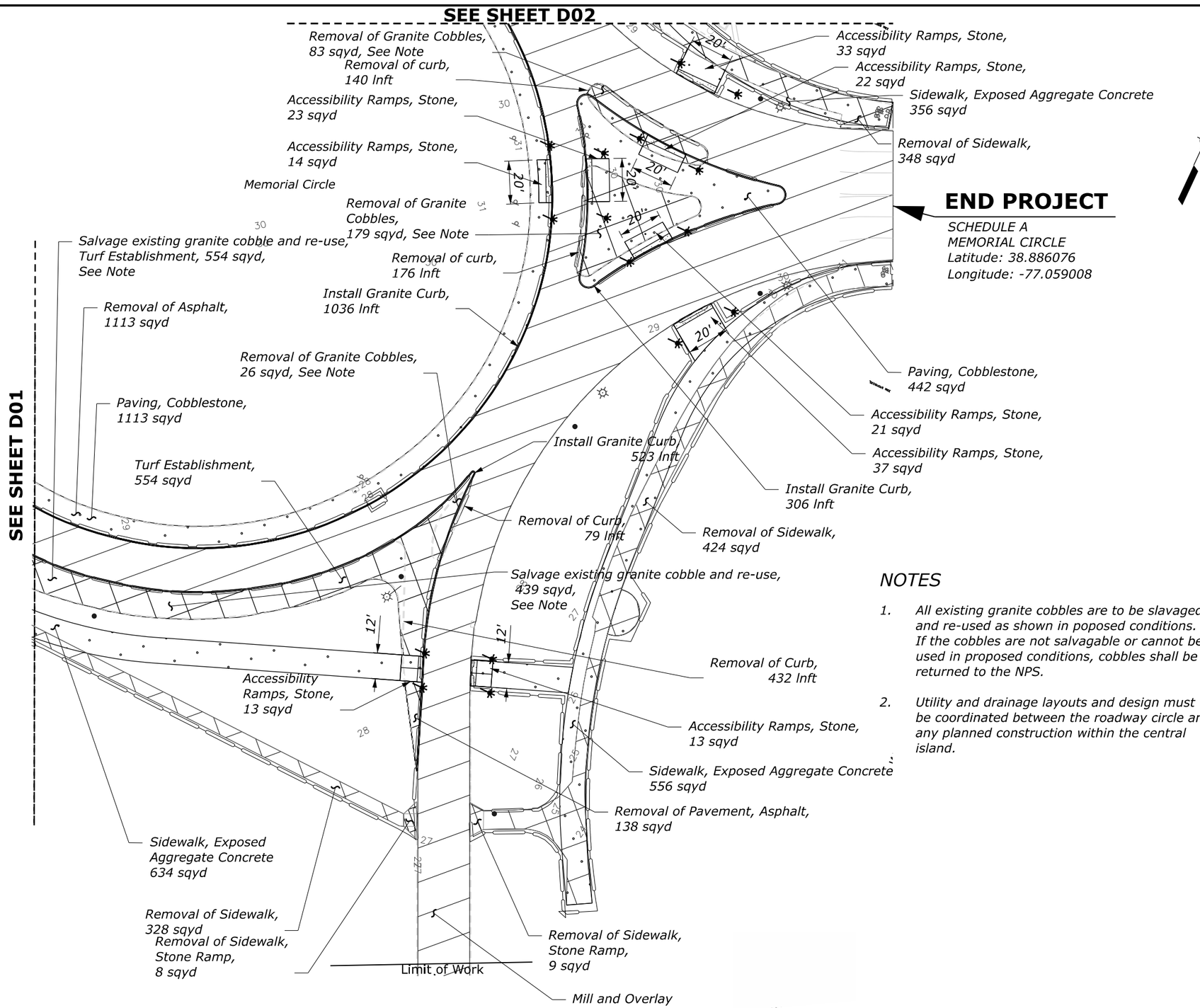


## NOTES

1. All existing granite cobbles are to be slavaged and re-used as shown in poposed conditions. If the cobbles are not salvagable or cannot be used in proposed conditions, cobbles shall be returned to the NPS.
2. Utility and drainage layouts and design must be coordinated between the roadway circle and any planned construction within the central island.

| NO. | DATE | BY | REVISIONS |
|---|---|---|---|
| | | | |
| | | | |
| | | | |
| | | | |

U.S. DEPARTMENT OF TRANSPORTATION
FEDERAL HIGHWAY ADMINISTRATION
OFFICE OF FEDERAL LANDS HIGHWAY

0 25 50
SCALE IN FEET

# CONSTRUCTION PLAN

MEMORIAL CIRCLE
WASHINGTON BLVD

M:\PROJECTS\gwmp\11(4)\Proj_Dev\CADD\ANC Arch\D_sheets_Memorial Circle.dgn [D03 (SHEET)]
21 May 2026 6:46 PM

NPS PMIS No. XXXXXX NPS Drwg No. XXX/XXXX

| PROJECT | SHEET NUMBER |
|---|---|
| DC NP GWMP ARCH TAR 2026 | H01 |

*NOTES*

1. *Install traffic signal poles 4' from the back of curb.*
2. *Install pedestrian pushbutton pedestals 2.5' by 4' from the edge of curb ramp.*

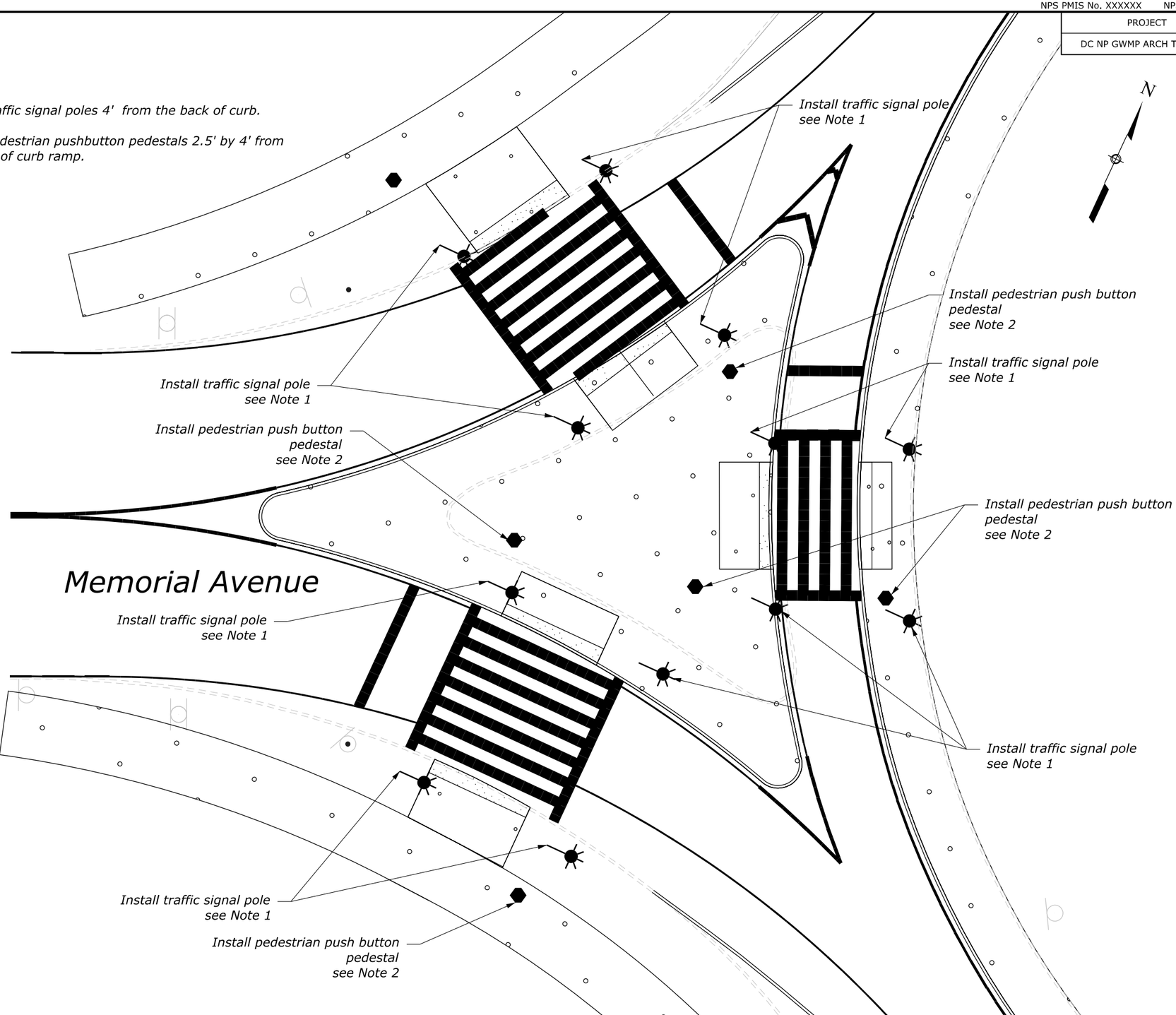


| NO. | DATE | BY | REVISIONS |
|---|---|---|---|
| | | | |
| | | | |
| | | | |
| | | | |

U.S. DEPARTMENT OF TRANSPORTATION
FEDERAL HIGHWAY ADMINISTRATION
OFFICE OF FEDERAL LANDS HIGHWAY

0 10 20
SCALE IN FEET

GEORGE WASHINGTON MEMORIAL PARKWAY

# TRAFFIC SIGNAL PLAN

MEMORIAL AVENUE
MEMORIAL CIRCLE

M:\PROJECTS\gwmp\11(4)\Proj_Dev\CADD\AMC Arch\H01-H04_Memorial Circle.dgn [H01 (Sheet)]
21 May 2026 6:35 PM

NPS PMIS No. XXXXXX NPS Drwg No. XXX/XXXX

| PROJECT | SHEET NUMBER |
|---|---|
| DC NP GWMP ARCH TAR 2026 | H02 |

## NOTES

1. Install traffic signal poles 4' from the back of curb.
2. Install pedestrian pushbutton pedestals 2.5' by 4' from the edge of curb ramp.

Install traffic signal pole see Note 1

Install pedestrian push button pedestal see Note 2

Install traffic signal pole see Note 1

Install pedestrian push button pedestal see Note 2

Install pedestrian push button pedestal see Note 2

Install traffic signal pole see Note 1

Install traffic signal pole see Note 1

Install pedestrian push button pedestal see Note 2

Install pedestrian push button pedestal see Note 2

N

"DECIDUOUS TREE"

"DECIDUOUS TREE"

"DECIDUOUS TREE"

"DECIDUOUS TREE"

"DECIDUOUS TREE"

"DECIDUOUS TREE"

ONLY

ONLY

Washington

Arlington Memorial Bridge

M:\PROJECTS\gwmp\11(4)\Proj_Dev\CADD\AMC Arch\H01-H04_Memorial Circle.dgn [H02 (Sheet)]

21 May 2026 6:35 PM

| NO. | DATE | BY | REVISIONS |
|---|---|---|---|
| | | | |
| | | | |
| | | | |
| | | | |

U.S. DEPARTMENT OF TRANSPORTATION
FEDERAL HIGHWAY ADMINISTRATION
OFFICE OF FEDERAL LANDS HIGHWAY

0 10 20
SCALE IN FEET

GEORGE WASHINGTON MEMORIAL PARKWAY

# TRAFFIC SIGNAL PLAN

MEMORIAL CIRCLE
ARLINGTON MEMORIAL BRIDGE

NPS PMIS No. XXXXXX NPS Drwg No. XXX/XXXX

| PROJECT | SHEET NUMBER |
|---|---|
| DC NP GWMP ARCH TAR 2026 | H03 |

*NOTES*

1. *Install traffic signal poles 4' from the back of curb.*
2. *Install pedestrian pedestals 2.5' from the curb ramp, placed adjacent to the sidewalk.*

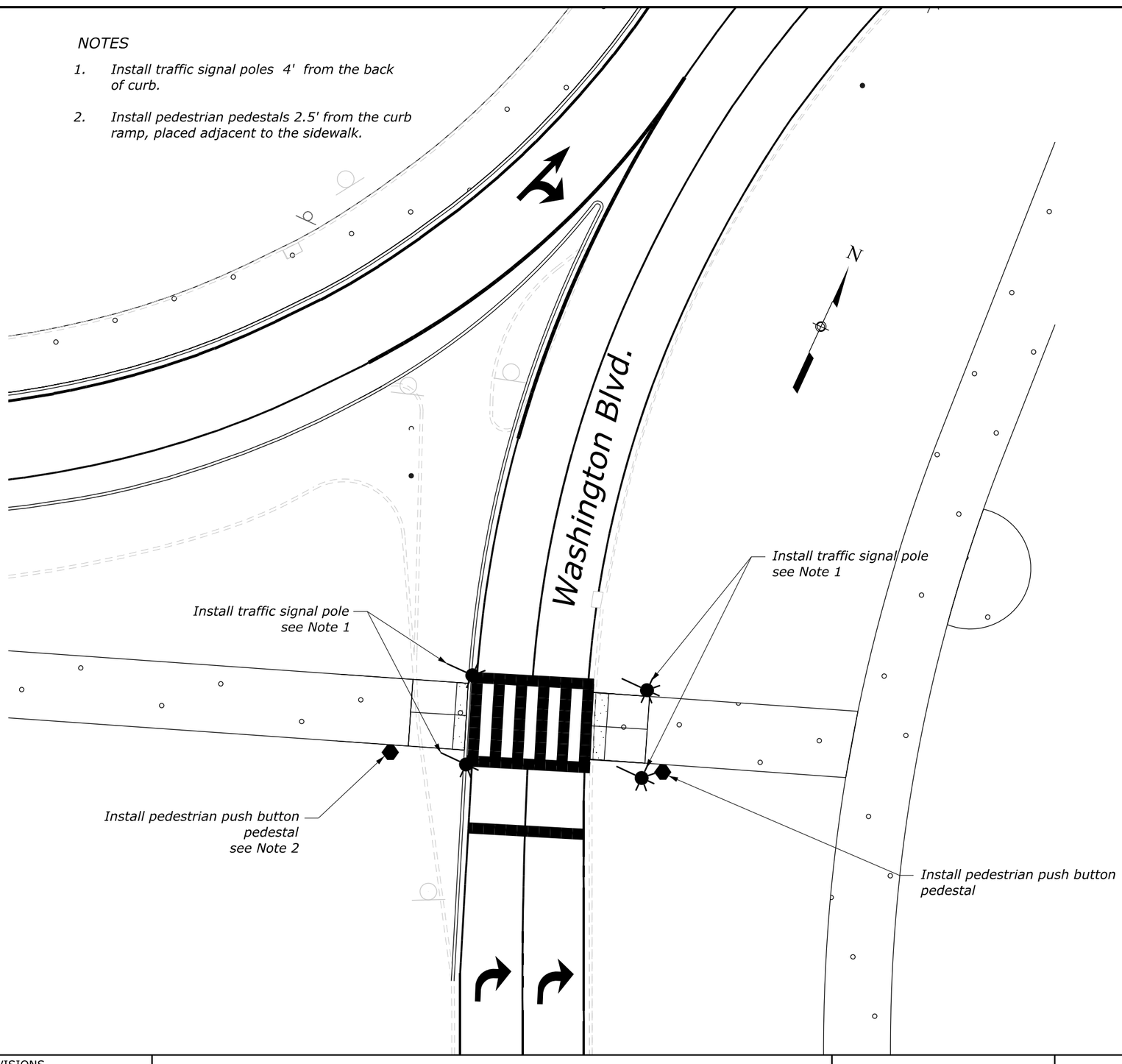


| NO. | DATE | BY | REVISIONS |
|---|---|---|---|
| | | | |
| | | | |
| | | | |
| | | | |

U.S. DEPARTMENT OF TRANSPORTATION
FEDERAL HIGHWAY ADMINISTRATION
OFFICE OF FEDERAL LANDS HIGHWAY

0 10 20
SCALE IN FEET

GEORGE WASHINGTON MEMORIAL PARKWAY

# TRAFFIC SIGNAL PLAN

WASHINGTON BLVD

M:\PROJECTS\gwmp\11(4)\Proj_Dev\CADD\AMC Arch\H01-H04_Memorial Circle.dgn [H03 (Sheet)]
21 May 2026 6:35 PM

NPS PMIS No. XXXXXX NPS Drwg No. XXX/XXXX

| PROJECT | SHEET NUMBER |
|---|---|
| DC NP GWMP ARCH TAR 2026 | H04 |

*NOTES*

1. *Install traffic signal poles 4' from the back of curb.*

2. *Install pedestrian pedestals 2.5' from the curb ramp, placed adjacent to the sidewalk.*

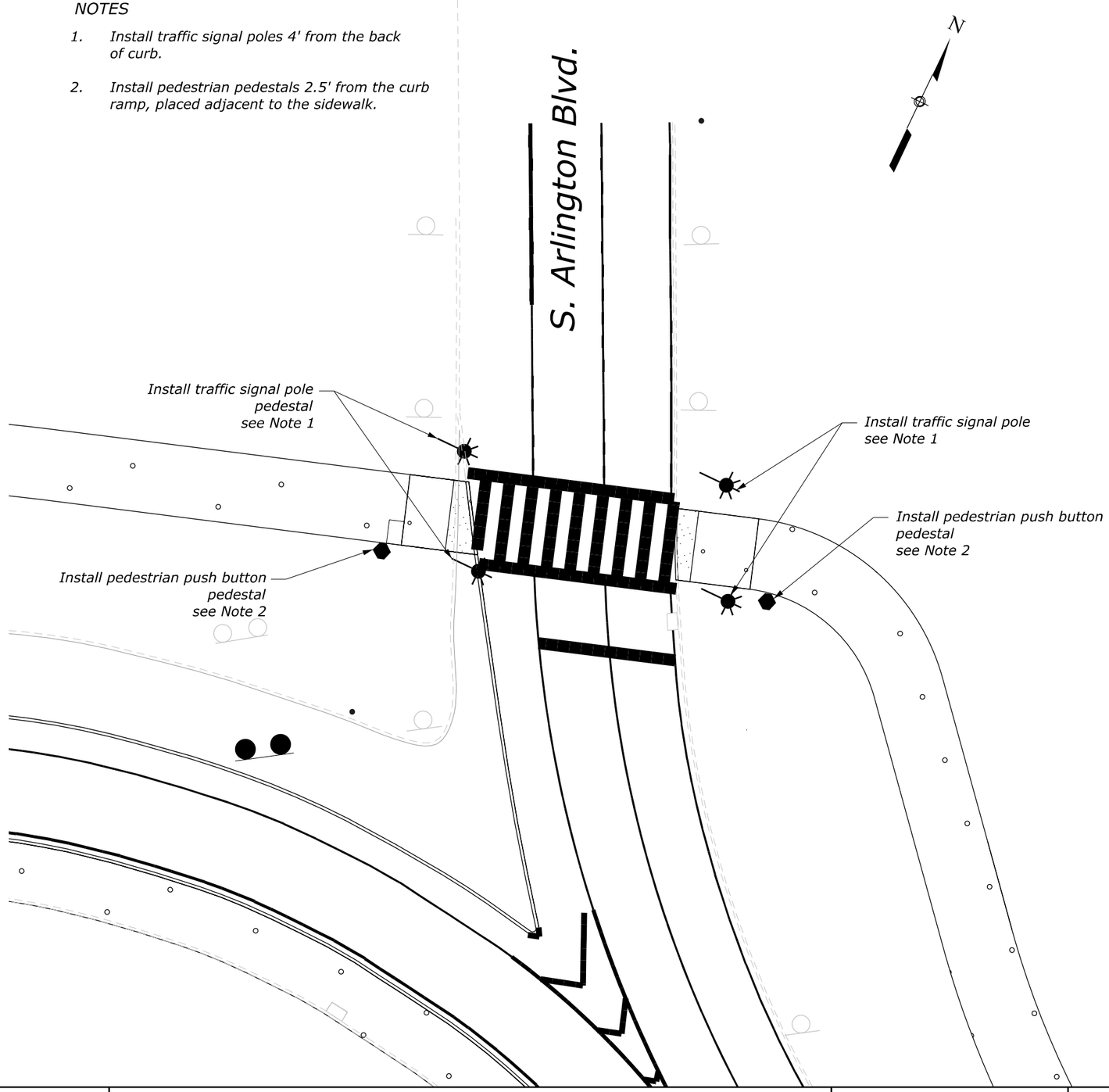


| NO. | DATE | BY | REVISIONS |
|---|---|---|---|
| | | | |
| | | | |
| | | | |
| | | | |

U.S. DEPARTMENT OF TRANSPORTATION
FEDERAL HIGHWAY ADMINISTRATION
OFFICE OF FEDERAL LANDS HIGHWAY

0 10 20
SCALE IN FEET

GEORGE WASHINGTON MEMORIAL PARKWAY

# TRAFFIC SIGNAL PLAN

ARLINGTON BLVD

M:\PROJECTS\gwmp\11(4)\Proj_Dev\CADD\AMC Arch\H01-H04_Memorial Circle.dgn [H04 (Sheet)]
21 May 2026 6:35 PM

## PROJECT DESCRIPTION

*This project consists of asphalt milling and overlay, safety improvements, signaling, pavement markings, and other miscellaneous work.*

## SOILS

*Soil disturbing activities include: sidewalk demolition and construction, concrete island reconstruction and turf establishment.*

*Area of Disturbance:*
*Demolition and construction of sidewalk and ramps: 1.57 acres (68,449 sqft)*
*Construction of islands: 0.22 acres (9,733 sqft)*
*Construction of asphalt pavers: 0.24 acres (10,535 sqft)*

*Total: 2.03 acres (79,380 sqft)*

*The total area of soil disturbance for the project is approximately 2.03 acres. The receiving water is the Potomac River.*

## GENERAL NOTES AND GUIDELINES

*Develop and implement a Spill Prevention Control and Countermeasures (SPCC) Plan following the requirements under 40 CFR 112. Report spills large enough to discharge surface waters to the National Response Center at 1-800-424-8802.*

*The Erosion and Sediment Control Narrative is intended to act as a guideline for preventing erosion and controlling sediment. The work consists of applying measures throughout the life of the project to control erosion and to minimize the sedimentation of rivers, creeks, and streams. Soil erosion control measures are also defined/outlined in the Standard Specifications for Construction of Roads and Bridges on Federal Highway Projects (FP-24) and the Special Contract Requirements. Install all erosion and sediment control devices in accordance with state and county requirements; as well as, Subsection 107.10 and the DOEE 2017 ESC Manual.*

*No construction access will be permitted through a wetland or a waterway.*

*Do not place excavated soil material adjacent to creeks, streams, or bodies of water in a manner that will cause it to be washed away by high water or runoff. Stabilize excess borrow material removed from the construction at the site of placement.*

*Do not allow any construction equipment to operate or access the down-slope side of the perimeter control measures.*

*Direct storm water to vegetated buffer areas and do not discharge directly into surface waters.*

*Preserve existing vegetation, trees, and shrubs when possible, and as directed by the CO. Do not disturb or clear vegetated areas outside the limits of work.*

*Protect all trees meeting the definition for a Special or Heritage trees under the DC Urban Forest Preservation Act, which applies to land maintained by the District of Columbia. Replace impacted trees in accordance with the National Capital Planning Commission Trees Preservation and Replacement Policy.*

## EROSION & SEDIMENT CONTROL CONSTRUCTION SEQUENCE

*Before removal, patching and miliing operation, install erosion and sediment protection devices to ensure disturbed sediment does not leave the project site.*

*Employ temporary stabilization practices in incremental stages when necessary as construction proceeds. Upon completion of any ground disturbing activity, immediately stabilize the associated disturbed areas. Once installed, do not modify the type, size, or location of any control or practice without approval of the CO.*

*Prior to any clearing, grubbing, and excavation, install perimeter controls and temporary inlet protection at the locations specified in the plans or as directed by the CO. Install silt fence around the staging area prior to stockpiling and storing equipment.*

*Once finished grading is achieved and all construction operations in each work area have been completed and all upslope areas are stabilized and vegetation is established, remove all perimeter controls after obtaining approval from the CO.*

*The contractor must conduct operations and maintain the project site so as to minimize the creation and dispersion of dust. Use dust control throughout the work at the site.*

*The contractor must provide clean water, free from salt, oil, and other deleterious material to be used for on-site dust control.*

## EROSION & SEDIMENT CONTROL CONSTRUCTION SEQUENCE (CONTINUED)

*The contractor shall supply water-spraying equipment capable of accessing all work areas.*

*The contractor shall implement strict dust control measures during the active construction periods on-site. These measures shall generally consist of water applications that shall be applied a minimum of once per day during dry weather or more often as required to prevent dust emissions.*

*For water application to undisturbed soil surfaces, the contractor shall:*

*Apply water with equipment consisting of tank, spray bar, and pump with discharge pressure guage.*

*Arrange spray bar height, nozzle spacing and spray pattern to provide complete coverage of ground with water.*

*Disperse water through the nozzles on spray bar at 20 psi (137.8 kPa) minimum. Keep areas damp without creating nuisance conditions such as ponding.*

*For water application to soil surfaces during during demolition and/or excavation, the contractor shall:*

*Apply water with equipment consisting of a tank, pump with discharge gauge, hoses and mist nozzles.*

*Locate tank and spraying equipment so that the entire excavation area can be misted without interfering with the demolition and/or excavation equipment or operations. Keep areas damp without creating nuisance conditions such as ponding.*

*Apply water spray in a manner to prevent movment of spray beyond the site boundaries.*

## MAINTENANCE AND INSPECTION PROCEDURES

*Unless stated otherwise, construct and maintain all vegetated and structural erosion control practices according to Section 157, the details shown in the plans, and the individual permitting requirements. Inspect and maintain erosion control facilities daily during construction activities and immediately following a rain event. Repair and replace any damaged measures by the end of the day.*

*Inlet protection - Inspect weekly to ensure that inlet protection remains firmly in place and is not damaged or clogged. Clean clogged inlet protection or replace clogged or damaged inlet protection as necessary.*

*Fiber roll - Inspect weekly and after each runoff event. Remove sediment deposits from the fiber when it reaches half the height of the device. Replace damaged fiber roll within 24 hours of inspection.*

M:\PROJECTS\gwmp\11(4)\Proj_Dev\CADD\AMC Arch\M01-M03-Memorial Circle_e8s.dgn [M01]
21 May 2026 6:14 PM

| NO. | DATE | BY | REVISIONS |
|---|---|---|---|
| | | | |
| | | | |
| | | | |
| | | | |

U.S. DEPARTMENT OF TRANSPORTATION
FEDERAL HIGHWAY ADMINISTRATION
OFFICE OF FEDERAL LANDS HIGHWAY

GEORGE WASHINGTON MEMORIAL PARKWAY

# EROSION AND SEDIMENT CONTROL NARRATIVE

| Pollution Prevention Good Housekeeping Stamp Notes | |
|---|---|
| **Fuels and Oils** | On-site refueling will be conducted in a dedicated location away from access to surface waters. Install containment berms and, or secondary containments around refueling areas and storage tanks. Spills will be cleaned up immediately and contaminated soils disposed of in accordance with all federal and District of Columbia regulations. Petroleum products will be stored in clearly labeled tightly sealed containers. All vehicles on site will be monitored for leaks and receive regular preventive maintenance activities. Any asphalt substances used on site will be applied according to manufacturer's recommendations. Spill kits will be included with all fueling sources and maintenance activities. |
| **Solid Waste** | No solid materials shall be discharged to surface water. Solid materials including building materials, garbage and paint debris shall be cleaned up daily and deposited into dumpsters, which will be periodically removed and deposited into a landfill. |
| **Abrasive Blasting** | Water blasting, sandblasting, and other forms of abrasive blasting on painted surfaces built prior to 1978 may only be performed if an effective containment system prevents dispersal of paint debris. |
| **Fertilizer** | Fertilizers will be applied only in the minimum amounts recommended by the manufacturer, worked into the soil to limit exposure to stormwater, and stored in a covered shed. Partially used bags will be transferred to a sealable bin to avoid spills. |
| **Paint and Other Chemicals** | All paint containers and curing compounds will be tightly sealed and stored when not required for use. Excess paint will not be discharges to the storm sewers, but will be properly disposed of according to manufacturer's recommendations. Spray guns will be cleaned on a removable tarp. Chemicals used on site are kept in small quantities and in closed containers undercover and kept out of direct contact with stormwater. As with fuels and oils, any inadvertent spills will be cleaned up immediately and disposed of according federal and District of Columbia regulations. |
| **Concrete** | Concrete trucks will not be allowed to wash out or discharge surplus concrete or drum wash on site, except in a specially designated concrete disposal area. Form release oil for decorative stone work will be applied over a pallet covered with an absorbent material to collect excess fluid. The absorbent material will be replaced and disposed of properly when saturated. |
| **Water Testing** | When testing and, or cleaning water supply lines, the discharge from the tested pipe will be collected and conveyed to a completed stormwater conveyance system for ultimate discharge into a stormwater best management practice (BMP). |
| **Sanitary Waste** | Portable lavatories located on site will be services on a regular basis by a contractor. Portable lavatories will be located in an upland area away from direct contact with surface waters. Any spills occurring during servicing will be cleaned immediately and contaminated soils disposed of in accordance with all federal and District of Columbia regulations. |

| DOEE SOIL EROSION AND SEDIMENT CONTROL PLAN GENERAL NOTES |
|---|
| **1.** Following initial land disturbance or re-disturbance, permanent or interim stabilization must be completed within seven (7) calendar days for the surfaces of all perimeter controls, dikes, swales, ditches, perimeter slopes, and slopes greater than three (3) horizontal to one (1) vertical (3:1); and fourteen (14) days for all other disturbed or graded areas on the project site. These requirements do not apply to areas shown on the plan that are used for material storage other than stockpiling, or for those areas on the plan where actual construction activities are being performed. Maintenance shall be performed as necessary so that stabilized areas continuously meet the appropriate requirements of the District of Columbia Standards and Specifications for Soil Erosion and Sediment Control (ESC). [21 DCMR § 542.9 (o)] |
| **2.** ESC measures shall be in place before and during land disturbance. [21 DCMR § 543.6] |
| **3.** Contact DOEE Inspection (202) 535-2977 to schedule a preconstruction meeting at least three (3) business days before the commencement of a land-disturbing activity. [21 DCMR § 503.7 (a)] |
| **4.** A copy of the approved plan set will be maintained at the construction site from the date that construction activities begin to the date of final stabilization and will be available for DOEE inspectors. [21 DCMR § 542.15] |
| **5.** ESC measures shall be in place to stabilize an exposed area as soon as practicable after construction activity has temporarily or permanently ceased but no later than fourteen (14) days following cessation, except that temporary or permanent stabilization shall be in place at the end of each day of underground utility work that is not contained within a larger development site. [21 DCMR § 543.7] |
| **6.** Stockpiled material being actively used during a phase of construction shall be protected against erosion by establishing and maintaining perimeter controls around the stockpile. [21 DCMR § 543.16 (a)] |
| **7.** Stockpiled material not being actively used or added to shall be stabilized with mulch, temporary vegetation, hydro-seed or plastic within fifteen (15) calendar days after its last use or addition. [21 DCMR § 543.16 (b)] |
| **8.** Fill material must be free of contamination levels of any pollutant that is, or may be considered to represent, a possible health hazard to the public or may be detrimental to surface or ground water quality, or which may cause damage to property or the drainage system. All fill material must be free of hazardous materials and comply with all applicable District and federal regulations. |
| **9.** Protect best management practices from sedimentation and other damage during construction for proper post construction operation. [21 DCMR § 543.5] |
| **10.** Request a DOEE inspector's approval after the installation of perimeter erosion and sediment controls, but before proceeding with any other earth disturbance or grading. [21 DCMR § 542.12 (a)] |
| **11.** Request a DOEE inspector's approval after final stabilization of the site and before the removal of erosion and sediment controls. [21 DCMR § 542.12 (b)] |
| **12.** Final stabilization means that all land-disturbing activities at the site have been completed and either of the following two criteria have been met: (1) a uniform (for example, evenly distributed, without large bare areas) perennial vegetative cover with a density of seventy percent (70%) of the native background vegetative cover for the area has been established on all unpaved areas and areas not covered by permanent structures, or (2) equivalent permanent stabilization measures have been employed (such as the use of riprap, gabions, or geotextiles). [21 DCMR § 542.12 (b.1, b.2)] |
| **13.** Follow the requirements of the United States Environmental Protection Agency approved Stormwater Pollution Prevention Plan (SWPPP) and maintain a legible copy of this SWPPP on site. [21 DCMR § 543.10 (b)] |
| **14.** Post a sign that notifies the public to contact DOEE in the event of erosion or other pollution. The sign will be placed at each entrance to the site or as directed by the DOEE inspector. Each sign will be no less than 18 x 24 inches in size and made of materials that will withstand weather for the duration of the project. Lettering will be at least 1 inch in height and easily readable by the public from a distance of twelve feet (12 ft). The sign must direct the public, in substantially the following form: "To Report Erosion, Runoff, or Stormwater Pollution" and will provide the construction site address, DOEE's telephone number (202-535-2977), DOEE's e-mail address (IEB.scheduling@dc.gov), and the 311 mobile app heading ("Construction-Erosion Runoff"). [21 DCMR § 543.22] |
| If a site disturbs 5,000 square feet of land or greater, the ESC plan must contain the following statement: |
| **15.** A *Responsible Person* must be present or available while the site is in a land-disturbing phase. The *Responsible Person* is charged with being available to (a) inspect the site and its ESC measures at least once biweekly and after a rainfall event to identify and remedy each potential or actual erosion problem, (b) respond to each potential or actual erosion problem identified by construction personnel, and (c) speak on site with DOEE to remedy each potential or actual erosion problem. A *Responsible Person* shall be (a) licensed in the District of Columbia as a civil or geotechnical engineer, a land surveyor, or architect; or (b) certified through a training program that DOEE approves, including a course on erosion control provided by another jurisdiction or professional association. During construction, the *Responsible Person* shall keep on site proof of professional licensing or of successful completion of a DOEE-approved training program. [21 DCMR § 547] |

M:\PROJECTS\gwmp\11(4)\Proj_Dev\CADD\AMC Arch\M01-M03-Memorial Circle_e&s.dgn [M02]
21 May 2026 6:14 PM

| NO. | DATE | BY | REVISIONS |
|---|---|---|---|
| | | | |
| | | | |
| | | | |
| | | | |

U.S. DEPARTMENT OF TRANSPORTATION
FEDERAL HIGHWAY ADMINISTRATION
OFFICE OF FEDERAL LANDS HIGHWAY

GEORGE WASHINGTON MEMORIAL PARKWAY

# EROSION AND SEDIMENT CONTROL NARRATIVE

## *VEGETATIVE STABILIZATION*

*There will be X.X acres in need of stabilization as a result of this project. Areas of turf establishment will be prepared with fertilizer, topsoil and mulch.*

*In accordance with Subsection 625.06, apply limestone and fertilizer at the following rates for the roadside turf area mix only:*

**Permanent Seeding Summary**

| | Seed Mixture | | | | Fertilizer Rate (10-20-20) | | | Lime Rate |
|---|---|---|---|---|---|---|---|---|
| No. | Species | Application Rate (lb/ac) | Seeding Dates | Seeding Depths | N | $P_2O_5$ | $K_2O$ | |
| 1 | Barlexas Tall Fescue | 75.0 | February 15 to Novemeber 15 | | 45 lb/ac | 90 lb/ac | 90 lb/ac | 2 ton/ac |
| 2 | Redcoat Tall Fescue | 62.5 | February 15 to Novemeber 15 | | | | | |
| 3 | Chewing Fescue | 62.5 | February 15 to Novemeber 15 | | | | | |
| 4 | Impact Kentucky Bluegrass | 25.0 | February 15 to Novemeber 15 | | (1.0 lb/ 1,000 $ft^2$) | (2.0 lb/ 1,000 $ft^2$) | (2.0 lb/ 1,000 $ft^2$) | (90 lb/ 1,000 $ft^2$) |
| 5 | Catalina Perennial Ryegrass | 25.0 | February 15 to Novemeber 15 | | | | | |

**Permanent Seeding Summary**

| | Seed Mixture | | | | Fertilizer Rate (10-20-20) | | | Lime Rate |
|---|---|---|---|---|---|---|---|---|
| No. | Species | Application Rate (lb/ac) | Seeding Dates | Seeding Depths | N | $P_2O_5$ | $K_2O$ | |
| 1 | Barlexas Tall Fescue | 75.0 | November 16 to February 14 | | 45 lb/ac | 90 lb/ac | 90 lb/ac | 2 ton/ac |
| 2 | Redcoat Tall Fescue | 62.5 | November 16 to February 14 | | | | | |
| 3 | Chewing Fescue | 62.5 | November 16 to February 14 | | | | | |
| 4 | Impact Kentucky Bluegrass | 25.0 | November 16 to February 14 | | (1.0 lb/ 1,000 $ft^2$) | (2.0 lb/ 1,000 $ft^2$) | (2.0 lb/ 1,000 $ft^2$) | (90 lb/ 1,000 $ft^2$) |
| 5 | Catalina Perennial Ryegrass | 25.0 | November 16 to February 14 | | | | | |

**Temporary Seeding Summary**

| | Seed Mixture | | | | Fertilizer Rate (10-20-20) | Lime Rate |
|---|---|---|---|---|---|---|
| No. | Species | Application Rate (lb/ac) | Seeding Dates | Seeding Depths | | |
| 1 | Barlexas Tall Fescue | 75.0 | February 15 to Novemeber 15 | | 436 lb/ac | 2 ton/ac |
| 2 | Redcoat Tall Fescue | 62.5 | February 15 to Novemeber 15 | | | |
| 3 | Chewing Fescue | 62.5 | February 15 to Novemeber 15 | | | |
| 4 | Impact Kentucky Bluegrass | 25.0 | February 15 to Novemeber 15 | | (10 lb/ 1,000 $ft^2$) | (90 lb/ 1,000 $ft^2$) |
| 5 | Catalina Perennial Ryegrass | 25.0 | February 15 to Novemeber 15 | | | |

**Temporary Seeding Summary**

| | Seed Mixture | | | | Fertilizer Rate (10-20-20) | Lime Rate |
|---|---|---|---|---|---|---|
| No. | Species | Application Rate (lb/ac) | Seeding Dates | Seeding Depths | | |
| 1 | Barlexas Tall Fescue | 75.0 | November 16 to February 14 | | 436 lb/ac | 2 ton/ac |
| 2 | Redcoat Tall Fescue | 62.5 | November 16 to February 14 | | | |
| 3 | Chewing Fescue | 62.5 | November 16 to February 14 | | | |
| 4 | Impact Kentucky Bluegrass | 25.0 | November 16 to February 14 | | (10 lb/ 1,000 $ft^2$) | (90 lb/ 1,000 $ft^2$) |
| 5 | Catalina Perennial Ryegrass | 25.0 | November 16 to February 14 | | | |

M:\PROJECTS\gwmp\11(4)\Proj_Dev\CADD\AMC Arch\M01-M03-Memorial Circle_e8s.dgn [M03]
21 May 2026 6:14 PM

| NO. | DATE | BY | REVISIONS |
|---|---|---|---|
| | | | |
| | | | |
| | | | |
| | | | |

U.S. DEPARTMENT OF TRANSPORTATION
FEDERAL HIGHWAY ADMINISTRATION
OFFICE OF FEDERAL LANDS HIGHWAY

GEORGE WASHINGTON MEMORIAL PARKWAY

# EROSION AND SEDIMENT CONTROL NARRATIVE

NPS PMIS No. XXXXXX NPS Drwg No. XXX/XXXX

| PROJECT | SHEET NUMBER |
|---|---|
| DC NP GWMP ARCH TAR 2026 | M04 |

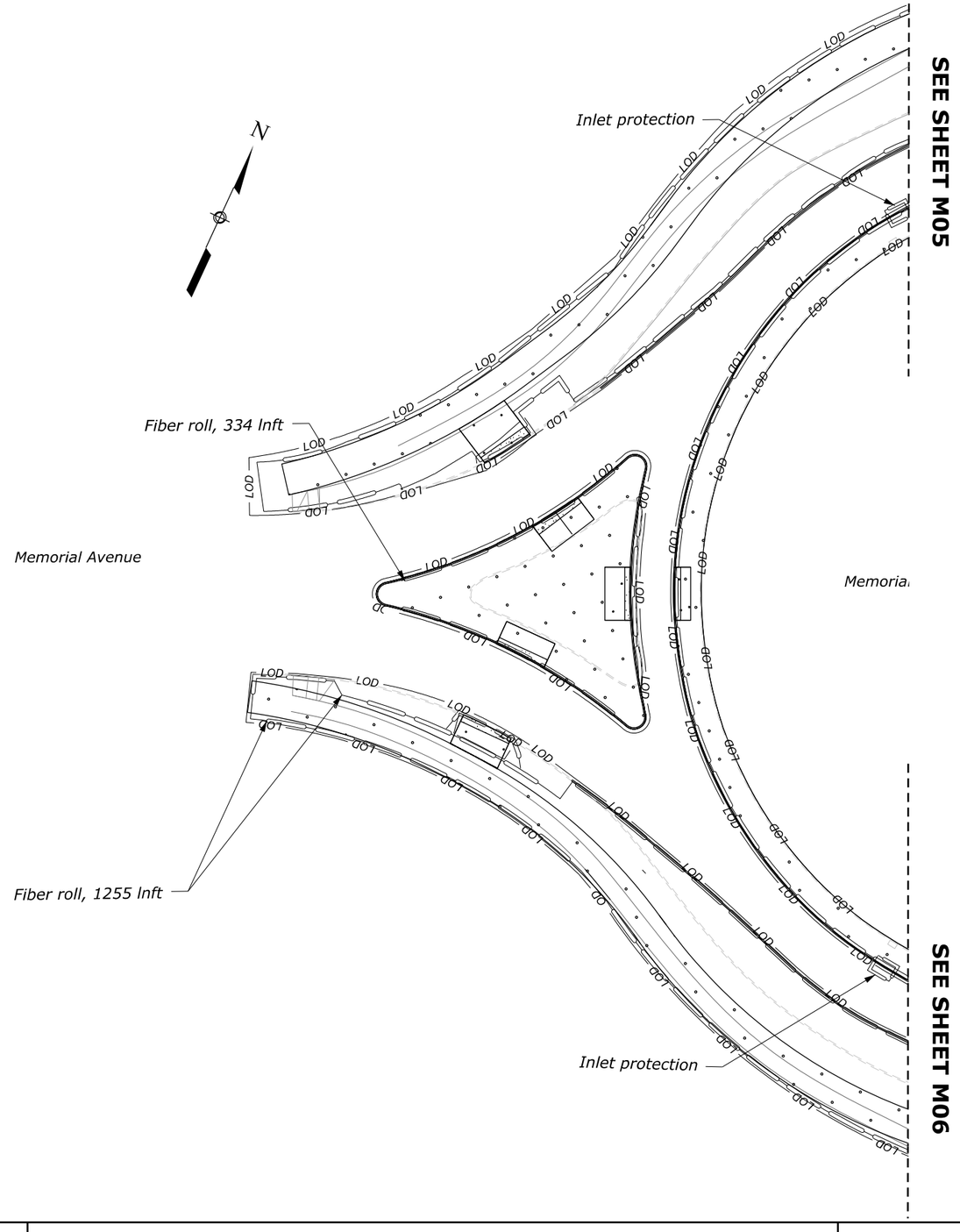


| NO. | DATE | BY | REVISIONS |
|---|---|---|---|
| | | | |
| | | | |
| | | | |
| | | | |

U.S. DEPARTMENT OF TRANSPORTATION
FEDERAL HIGHWAY ADMINISTRATION
OFFICE OF FEDERAL LANDS HIGHWAY

0 25 50
SCALE IN FEET

GEORGE WASHINGTON MEMORIAL PARKWAY

# EROSION AND SEDIMENT CONTROL PLAN

MEMORIAL CIRCLE

M:\PROJECTS\gwmp\11(4)\Proj_Dev\CADD\AMC Arch\M04-M06_Memorial Circle.dgn [M004 (SHEET)]
21 May 2026 6:20 PM

NPS PMIS No. XXXXXX NPS Drwg No. XXX/XXXX

| PROJECT | SHEET NUMBER |
|---|---|
| DC NP GWMP ARCH TAR 2026 | M05 |

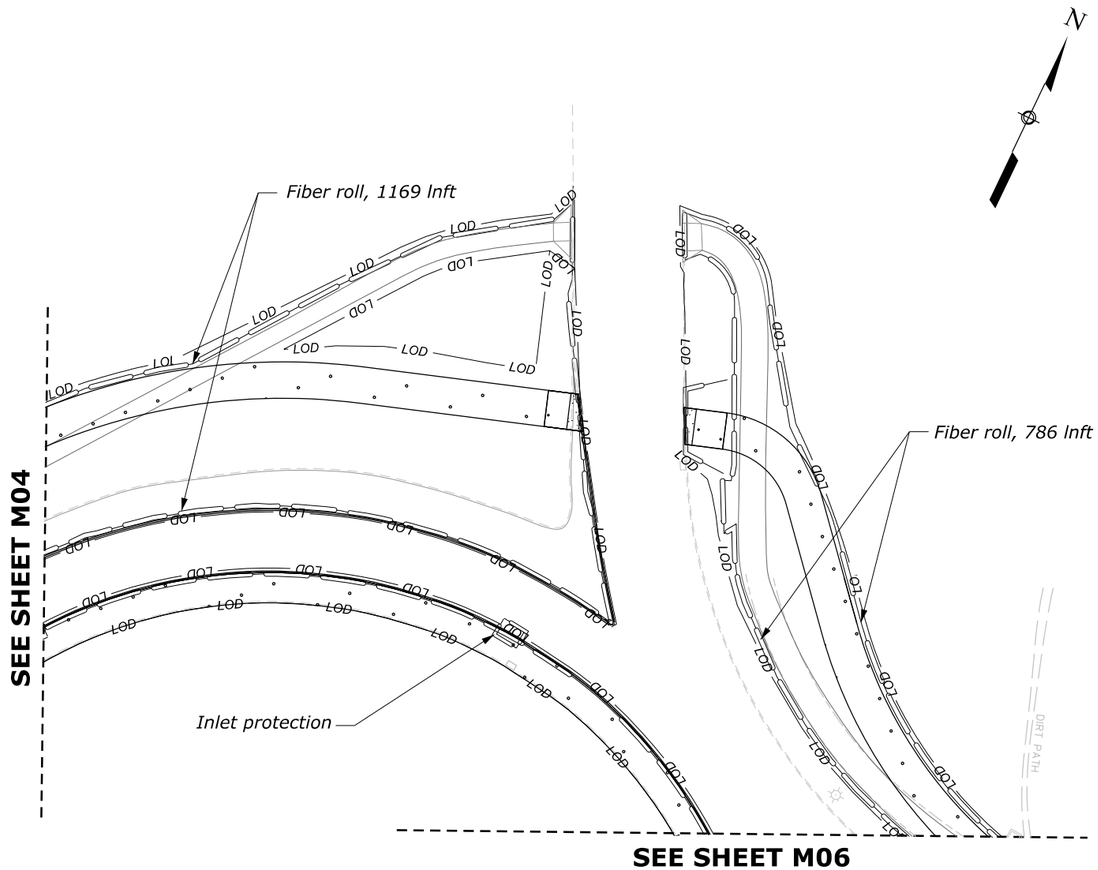


| NO. | DATE | BY | REVISIONS |
|---|---|---|---|
| | | | |
| | | | |
| | | | |
| | | | |

U.S. DEPARTMENT OF TRANSPORTATION
FEDERAL HIGHWAY ADMINISTRATION
OFFICE OF FEDERAL LANDS HIGHWAY

0 25 50
SCALE IN FEET

GEORGE WASHINGTON MEMORIAL PARKWAY

# EROSION AND SEDIMENT CONTROL PLAN

MEMORIAL CIRCLE
S. ARLINGTON BLVD

M:\PROJECTS\gwmp\11(4)\Proj_Dev\CADD\AMC Arch\M04-M06_Memorial Circle.dgn [M05 SHEET]
21 May 2026 6:20 PM

NPS PMIS No. XXXXXX NPS Drwg No. XXX/XXXX

| PROJECT | SHEET NUMBER |
|---|---|
| DC NP GWMP ARCH TAR 2026 | M06 |

**SEE SHEET M05**

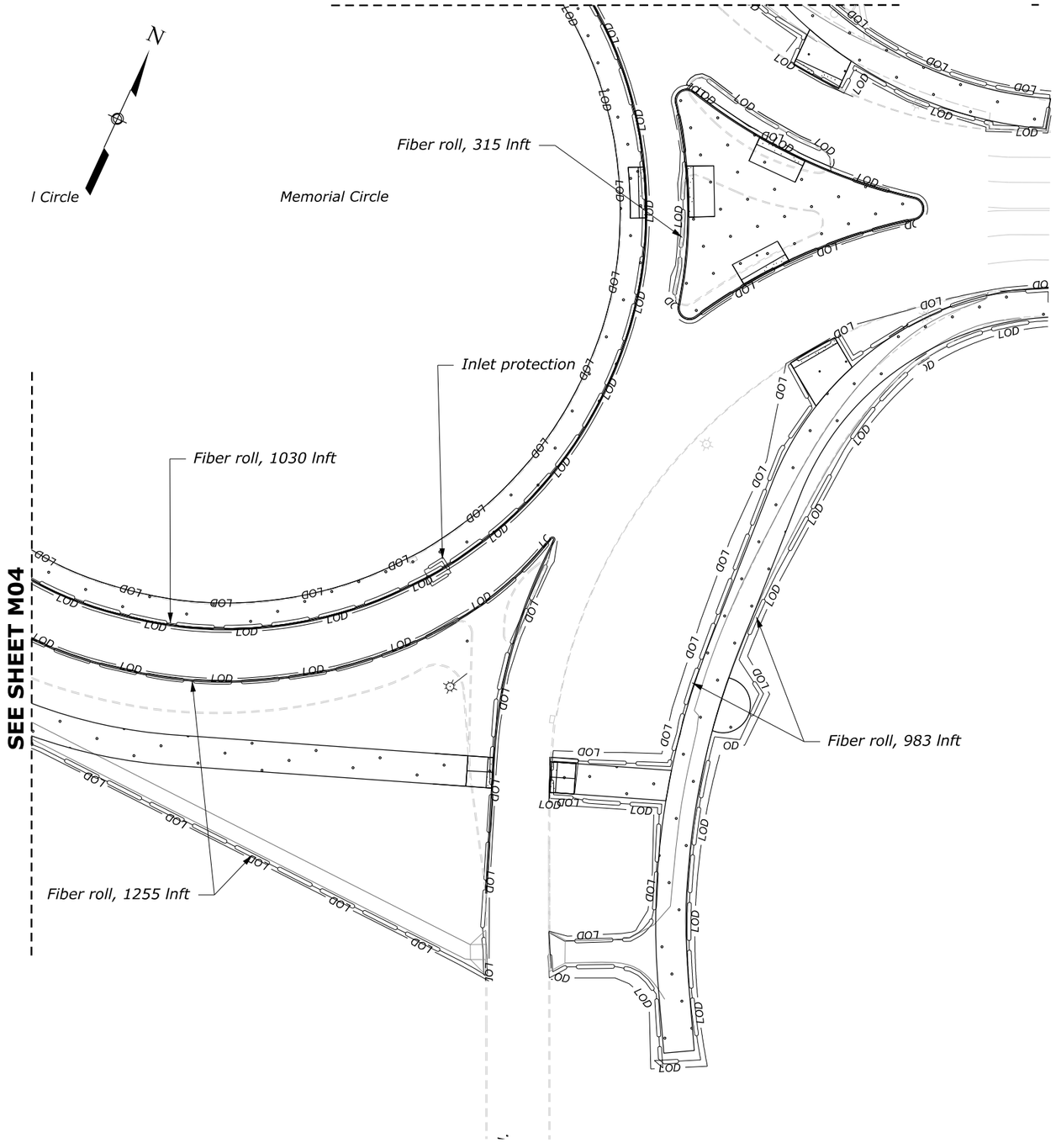


**SEE SHEET M04**

M:\PROJECTS\gwmp\11(4)\Proj_Dev\CADD\AMC Arch\M04-M06_Memorial Circle.dgn [M06 (SHEET)]

21 May 2026 6:20 PM

| NO. | DATE | BY | REVISIONS |
|---|---|---|---|
| | | | |
| | | | |
| | | | |
| | | | |

U.S. DEPARTMENT OF TRANSPORTATION
FEDERAL HIGHWAY ADMINISTRATION
OFFICE OF FEDERAL LANDS HIGHWAY

0 25 50
SCALE IN FEET

GEORGE WASHINGTON MEMORIAL PARKWAY

# EROSION AND SEDIMENT CONTROL PLAN

MEMORIAL CIRCLE
WASHINGTON BLVD

## *TRAFFIC CONTROL PLAN GENERAL NOTES:*

1. *The Traffic Control Plans have been designed in accordance with the Manual on Uniform Traffic Control Devices (MUTCD), latest edition, and Section 635 of the Eastern Federal Lands Highway Division (EFLHD) detail drawings.*

2. *Traffic control signing, devices, workzone and overall set up is located within National Park Service (NPS)-owned and maintained roadways. If applicable, coordinate with DDOT, VDOT, Arlington County or other local agencies for work taking place along roadways under their respective jurisdiction. If applicable, all lane closure hours on VDOT-maintained roadways shall be in accordance with the Lane Closures in NOVA District Memorandum, dated February, 2024. If applicable, all work along DDOT-maintained roadways shall be in accordance with the DDOT Design and Engineering Manual (2023) and the DDOT Work Zone Temporary Traffic Control Manual (2006).*

3. *The allowable lane closure hours apply to the Memorial Circle Safety Improvements.*

   (a) *Maintain a minimum of one lane of traffic in each direction from 9:00 PM to 5:00 AM and during non-rush hours.*
   (b) *During rush hours, maintain existing number of lanes of traffic.*
   (c) *Lane closures must be scheduled to not conflict with local events.*
   (d) *Definition of Rush Hours and Night Hours*
   *EB Morning Rush Hours: 5:00 AM to 9:30 AM*
   *WB Evening Rush Hours: 2:30 PM to 7:00 PM*
   *Night Hours: 9:00 PM to 5:00 AM*

4. *Take all appropriate measures to ensure that adequate sight distances are provided during construction operations. Traffic control devices, signs, construction equipment, material storage or any other obstacle should not interfere with sight distances.*

5. *Do not store equipment and/or materials within the established clear zone unless positive protection is provided.*

6. *Do not perform any work, park vehicles or equipment, or store materials in buffer areas of lane closures.*

7. *Place signs as shown in the Traffic Control Plans. Temporary sign locations can be adjusted in the field so that they do not conflict with permanent existing signs or other existing features, such as sidewalk ramps, railing or light poles. Maintain all existing permanent signs during construction, unless otherwise noted in each stage of the Traffic Control Plans.*

8. *The Temporary Traffic Control Plans depict the major traffic control devices and safety measures required for construction. The daily control of traffic including placement, maintenance, and removal of traffic control devices is the Contractor's responsibility.*

9. *Implement additional measures as needed to provide separation between pedestrians, bicycles, and the work zone.*

10. *Remove traffic control devices no longer needed at the end of each shift. Cover signs that conflict with the current traffic set-up.*

11. *Coordinate traffic control signing and devices as needed with all other work zones in the vicinity, and make adjustments as necessary.*

## *TRANSPORTATION OPERATIONS PLAN:*

*The following is a list of local emergency contact agencies:*

| | |
|---|---|
| *Fire and Emergency Medical Services:* | *911* |
| *US Park Police:* | *202-619-7500* |
| *Virginia State Police:* | *703-803-0026* |
| *Arlington County Police:* | *703-558-2222* |
| *Arlington County Public Safety Communications and Emergency Management:* | *703-228-7935* |
| *Arlington County Transportation:* | *703-228-5000* |
| *Metropolitan Area Transportation Operations Coordination (MATOC):* | *301-405-7841* |
| *DDOT Transportation Management Center:* | *202-673-6813* |
| *VDOT Northern Region Operations Center:* | *703-877-3401* |
| *MDOT Operations Center:* | *410-582-5605* |
| *US Department of Homeland Security:* | *202-282-8000* |

*For utility company contact information, call 811.*

## *POSTED SPEED LIMITS TABLE*

| *Road Name* | *Posted Speed Limit (mph)* |
|---|---|
| *Arlington Memorial Bridge* | *30* |
| *Memorial Avenue* | *20-30* |
| *Washington Boulevard* | *25-40* |
| *George Washington Memorial Parkway* | *50* |
| *GWMP Distributor Ramp at Memorial Circle* | *30* |
| *Washington Blvd to Memorial Circle* | *30-45* |
| *Washington Blvd from Memorial Circle to US Hwy 50* | *30-40* |
| *Washington Blvd Turnaround* | *30* |

M:\PROJECTS\gwmp\11(4)\Proj_Dev\CADD\AMC Arch\N Sheets\N01-NYX-Memorial Circle_ttc_nar.dgn [TEMPORARY TRAFFIC CONTROL NARRATIVE]
21 May 2026 6:17 PM

| NO. | DATE | BY | REVISIONS |
|---|---|---|---|
| | | | |
| | | | |
| | | | |
| | | | |

U.S. DEPARTMENT OF TRANSPORTATION
FEDERAL HIGHWAY ADMINISTRATION
OFFICE OF FEDERAL LANDS HIGHWAY

GEORGE WASHINGTON MEMORIAL PARKWAY

# TEMPORARY TRAFFIC CONTROL NARRATIVE

NPS PMIS No. XXXXXX NPS Drwg No. XXX/XXXX

| PROJECT | SHEET NUMBER |
|---|---|
| DC NP GWMP ARCH TAR 2026 | N02 |

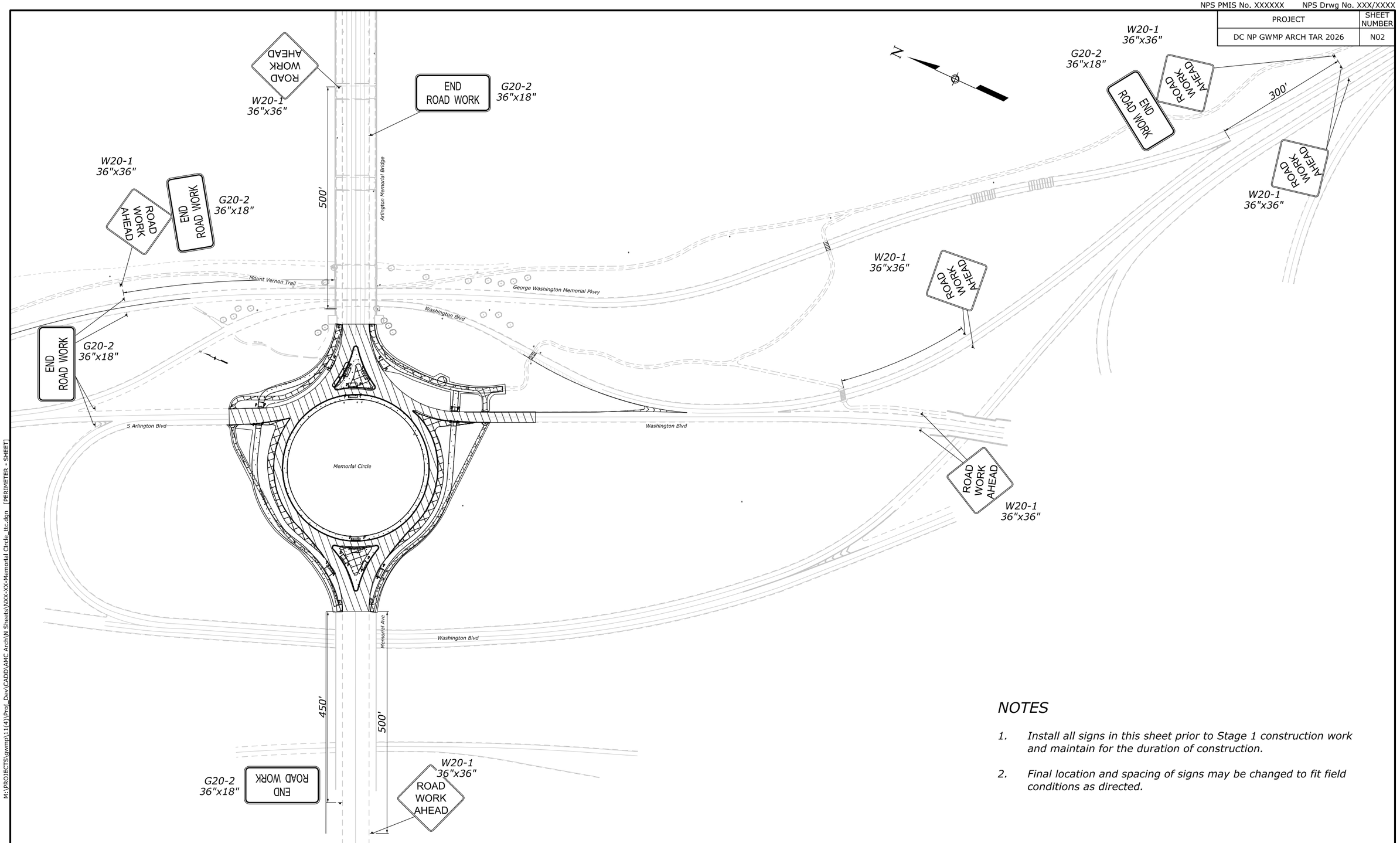


## NOTES

1. *Install all signs in this sheet prior to Stage 1 construction work and maintain for the duration of construction.*
2. *Final location and spacing of signs may be changed to fit field conditions as directed.*

| NO. | DATE | BY | REVISIONS |
|---|---|---|---|
| | | | |
| | | | |
| | | | |
| | | | |

U.S. DEPARTMENT OF TRANSPORTATION
FEDERAL HIGHWAY ADMINISTRATION
OFFICE OF FEDERAL LANDS HIGHWAY

0 100 200
SCALE IN FEET

GEORGE WASHINGTON MEMORIAL PARKWAY

# TEMPORARY TRAFFIC CONTROL PLAN FOR THE SIGNAL AND SIDEWALK IMPROVEMENT

PERIMETER PLAN

M:\PROJECTS\gwmp\11(4)\Proj_Dev\CADD\AMC Arch\N Sheets\WXX-XX-Memorial Circle_ttc.dgn [PERIMETER - SHEET]
21 May 2026 6:19 PM

NPS PMIS No. XXXXXX NPS Drwg No. XXX/XXXX

| PROJECT | SHEET NUMBER |
|---|---|
| DC NP GWMP ARCH TAR 2026 | N03 |

**SEE SHEET N05**

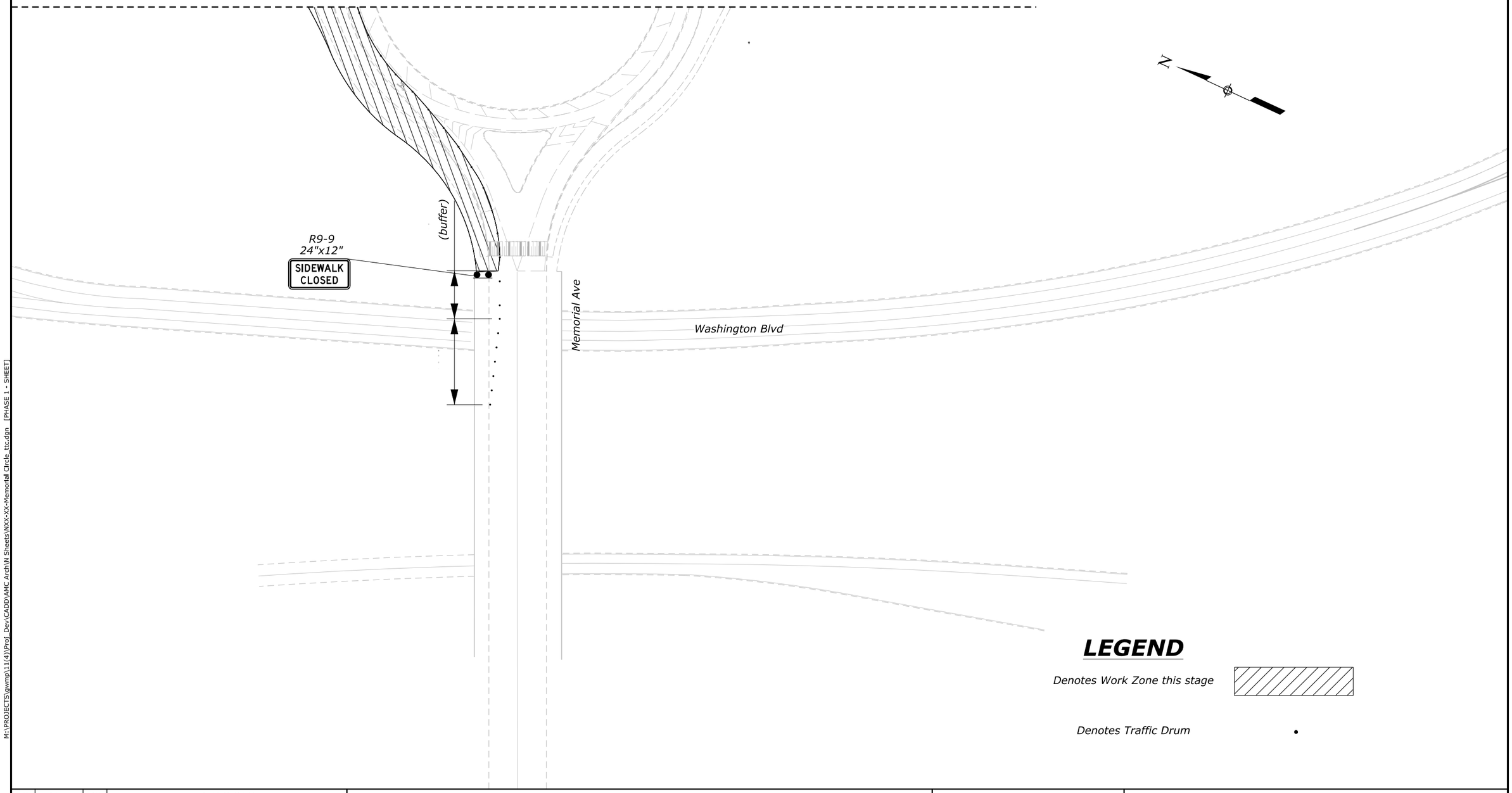


## LEGEND

*Denotes Work Zone this stage*

*Denotes Traffic Drum*

| NO. | DATE | BY | REVISIONS |
|---|---|---|---|
| | | | |
| | | | |
| | | | |
| | | | |

U.S. DEPARTMENT OF TRANSPORTATION
FEDERAL HIGHWAY ADMINISTRATION
OFFICE OF FEDERAL LANDS HIGHWAY

0 50 100
SCALE IN FEET

GEORGE WASHINGTON MEMORIAL PARKWAY

# TEMPORARY TRAFFIC CONTROL PLAN FOR THE SIGNAL AND SIDEWALK IMPROVEMENT

STAGE 1

M:\PROJECTS\gwmp\11(4)\Proj_Dev\CADD\AMC Arch\N Sheets\NXX-XX-Memorial Circle_ttc.dgn [PHASE 1 - SHEET]
21 May 2026 6:19 PM

NPS PMIS No. XXXXXX NPS Drwg No. XXX/XXXX

| PROJECT | SHEET NUMBER |
|---|---|
| DC NP GWMP ARCH TAR 2026 | N04 |

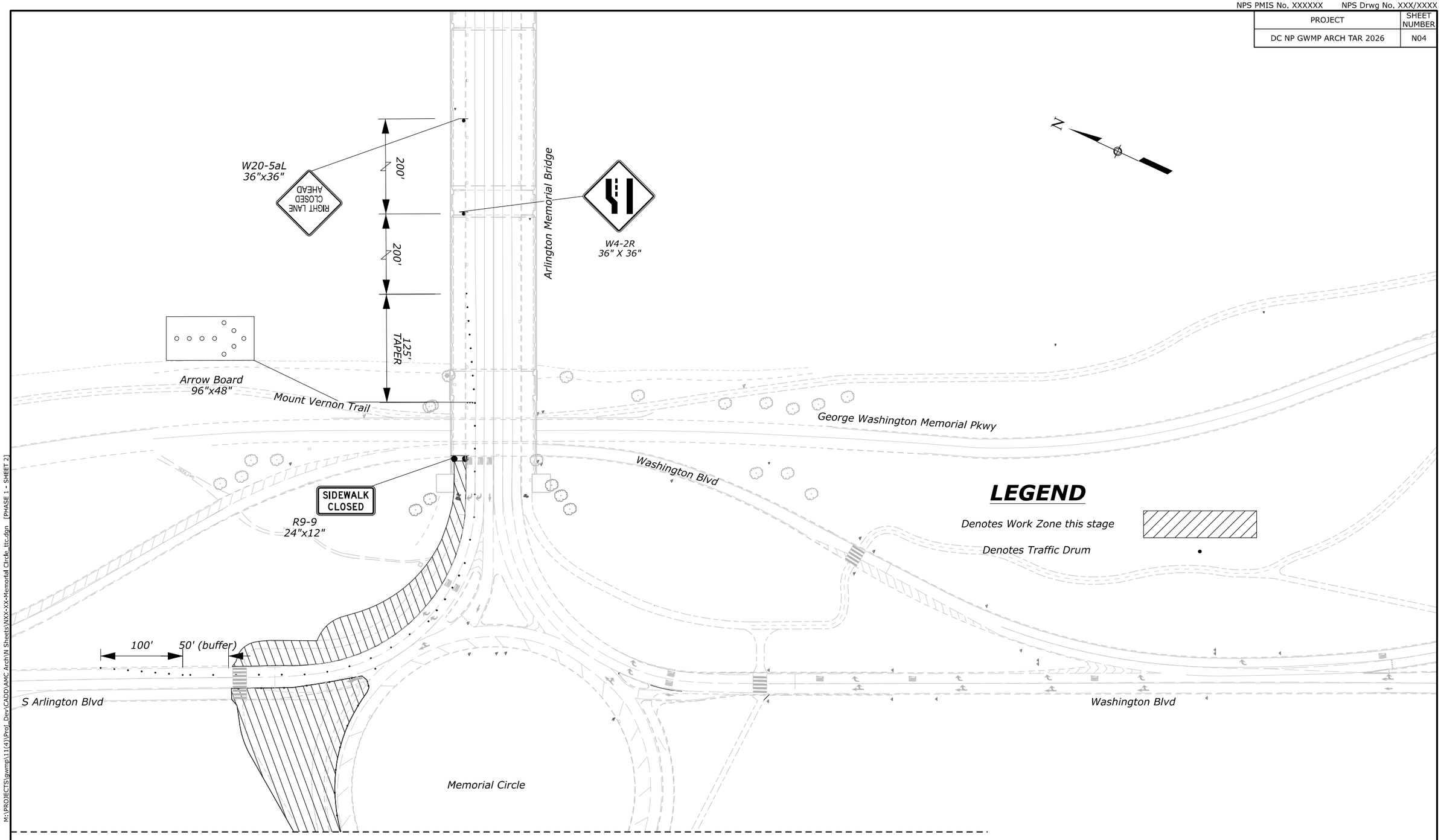


**SEE SHEET N04**

| NO. | DATE | BY | REVISIONS |
|---|---|---|---|
| | | | |
| | | | |
| | | | |
| | | | |

U.S. DEPARTMENT OF TRANSPORTATION
FEDERAL HIGHWAY ADMINISTRATION
OFFICE OF FEDERAL LANDS HIGHWAY

0 50 100
SCALE IN FEET

GEORGE WASHINGTON MEMORIAL PARKWAY

# TEMPORARY TRAFFIC CONTROL PLAN FOR THE SIGNAL AND SIDEWALK IMPROVEMENT

STAGE 1

M:\PROJECTS\gwmp\11(4)\Proj_Dev\CADD\AMC Arch\N Sheets\NXX-XX-Memorial Circle_ttc.dgn [PHASE 1 - SHEET 2]
21 May 2026 6:19 PM

NPS PMIS No. XXXXXX NPS Drwg No. XXX/XXXX

| PROJECT | SHEET NUMBER |
|---|---|
| DC NP GWMP ARCH TAR 2026 | N05 |

**SEE SHEET N07**

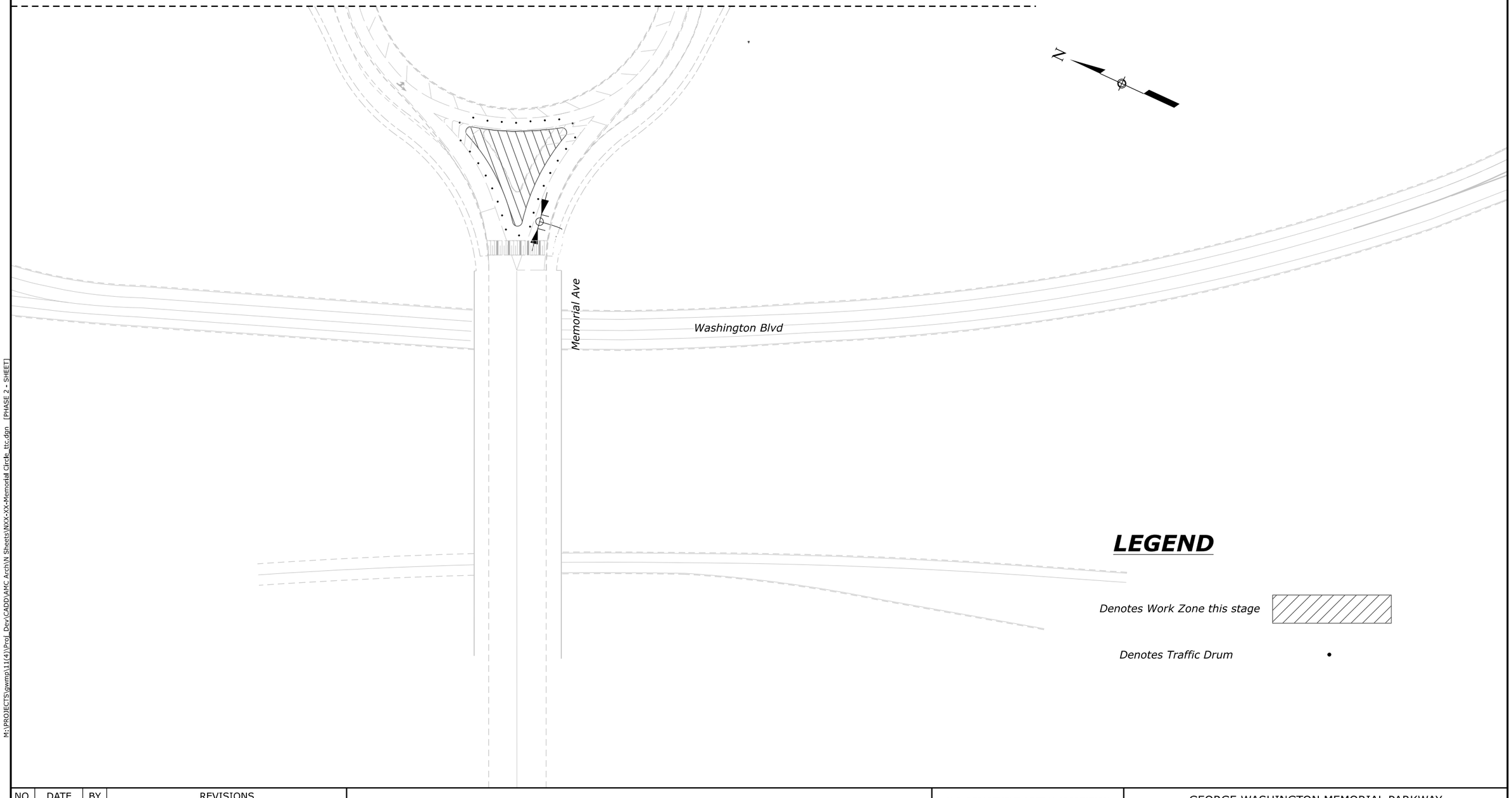


## *LEGEND*

*Denotes Work Zone this stage*

*Denotes Traffic Drum*

| NO. | DATE | BY | REVISIONS |
|---|---|---|---|
| | | | |
| | | | |
| | | | |
| | | | |

U.S. DEPARTMENT OF TRANSPORTATION
FEDERAL HIGHWAY ADMINISTRATION
OFFICE OF FEDERAL LANDS HIGHWAY

0 50 100
SCALE IN FEET

GEORGE WASHINGTON MEMORIAL PARKWAY

# TEMPORARY TRAFFIC CONTROL PLAN FOR THE SIGNAL AND SIDEWALK IMPROVEMENT

STAGE 2

M:\PROJECTS\gwmp\111(4)\Proj_Dex\CADD\AMC Arch\N Sheets\NXX-XX-Memorial Circle_ttc.dgn [PHASE 2 - SHEET]
21 May 2026 6:19 PM

NPS PMIS No. XXXXXX NPS Drwg No. XXX/XXXX

| PROJECT | SHEET NUMBER |
|---|---|
| DC NP GWMP ARCH TAR 2026 | N06 |

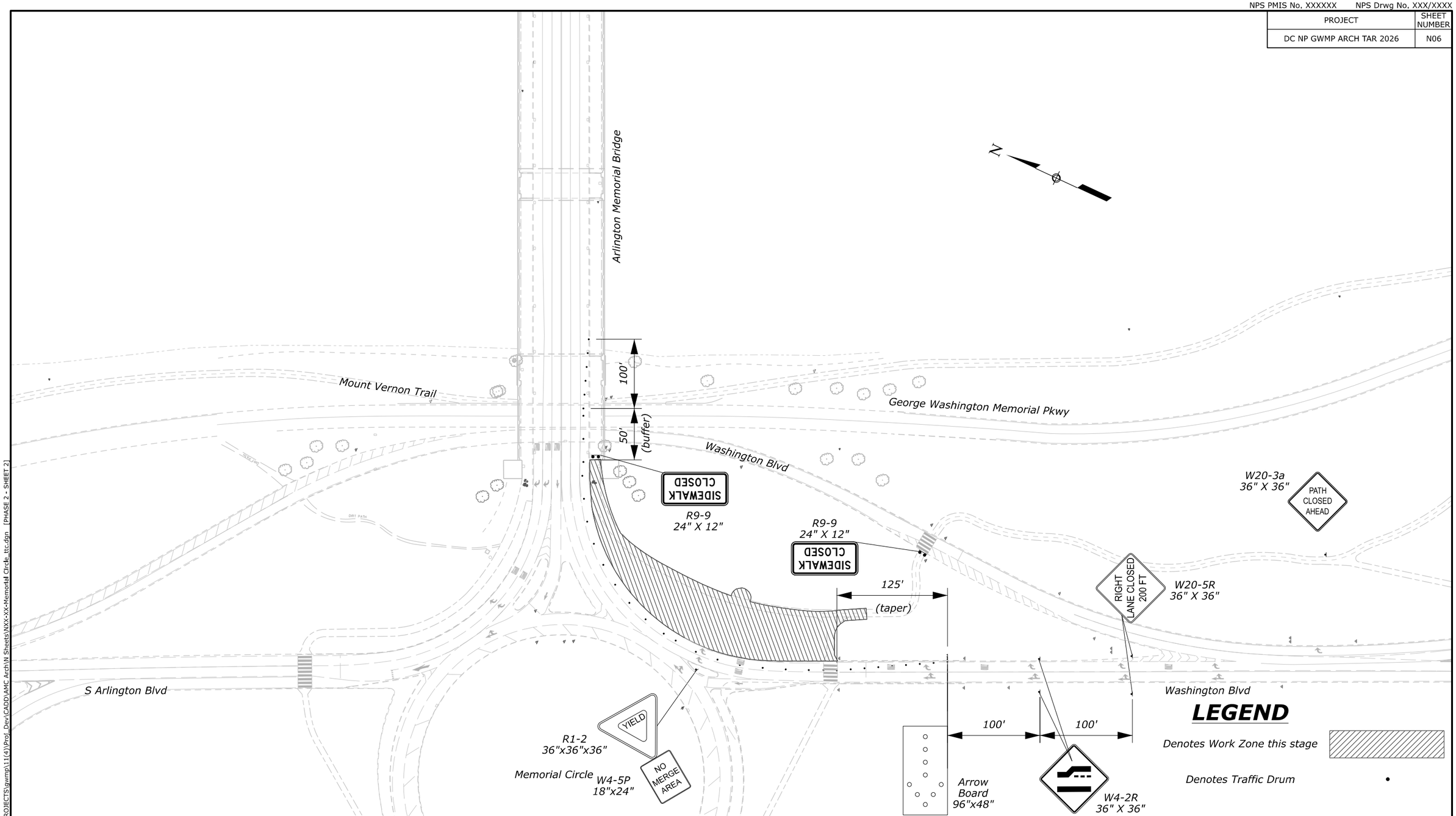


SEE SHEET N06

| NO. | DATE | BY | REVISIONS |
|---|---|---|---|
| | | | |
| | | | |
| | | | |
| | | | |

U.S. DEPARTMENT OF TRANSPORTATION
FEDERAL HIGHWAY ADMINISTRATION
OFFICE OF FEDERAL LANDS HIGHWAY

0 50 100
SCALE IN FEET

GEORGE WASHINGTON MEMORIAL PARKWAY

# TEMPORARY TRAFFIC CONTROL PLAN FOR THE SIGNAL AND SIDEWALK IMPROVEMENT

STAGE 2

M:\PROJECTS\gwmp\11(4)\Proj_Dev\CADD\AMC Arch\N Sheets\NXX-XX-Memorial Circle_ttc.dgn [PHASE 2 - SHEET 2]
21 May 2026 6:19 PM

NPS PMIS No. XXXXXX NPS Drwg No. XXX/XXXX

| PROJECT | SHEET NUMBER |
|---|---|
| DC NP GWMP ARCH TAR 2026 | N07 |

**SEE SHEET N09**

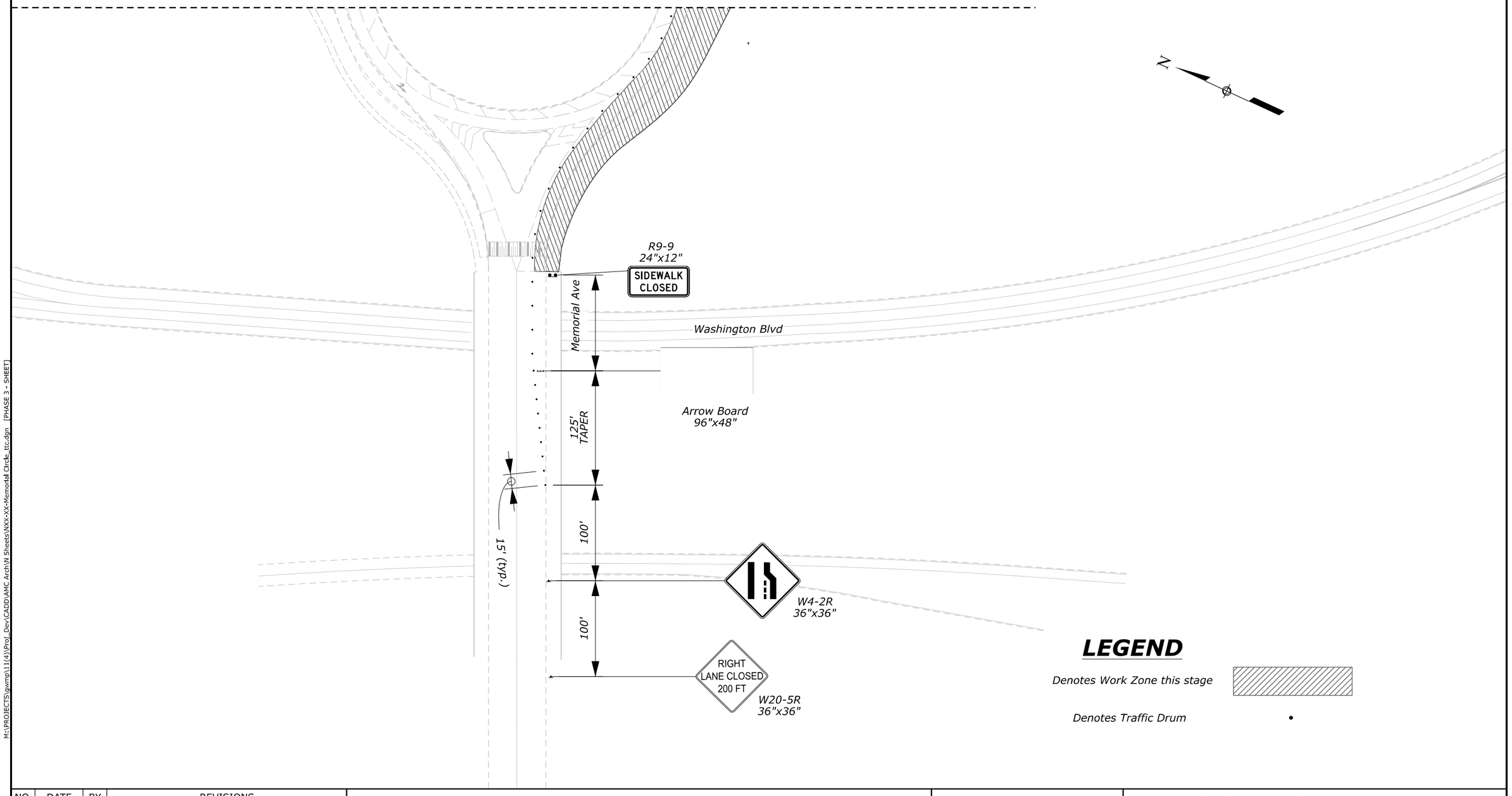


## LEGEND

Denotes Work Zone this stage

Denotes Traffic Drum •

| NO. | DATE | BY | REVISIONS |
|---|---|---|---|
| | | | |
| | | | |
| | | | |
| | | | |

U.S. DEPARTMENT OF TRANSPORTATION
FEDERAL HIGHWAY ADMINISTRATION
OFFICE OF FEDERAL LANDS HIGHWAY

0 50 100
SCALE IN FEET

GEORGE WASHINGTON MEMORIAL PARKWAY

# TEMPORARY TRAFFIC CONTROL PLAN FOR THE SIGNAL AND SIDEWALK IMPROVEMENT

STAGE 3

M:\PROJECTS\gwmp\11(4)\Proj_Dev\CADD\AMC Arch\N Sheets\WXX-XX-Memorial Circle_ntc.dgn [PHASE 3 - SHEET]
21 May 2026 6:19 PM

NPS PMIS No. XXXXXX NPS Drwg No. XXX/XXXX

| PROJECT | SHEET NUMBER |
|---|---|
| DC NP GWMP ARCH TAR 2026 | N08 |

W20-5aL
36"x36"

2 LEFT LANES CLOSED AHEAD

100'

100'

125'
TAPER

Arrow Board
96"x48"

Arlington Memorial Bridge

W4-2L
36" X 36"

N

Mount Vernon Trail

George Washington Memorial Pkwy

Washington Blvd

## LEGEND

Denotes Work Zone this stage

Denotes Traffic Drum

R9-9
24"x12"

SIDEWALK CLOSED

125'
TAPER

S Arlington Blvd

Arrow Board
96"x48"

Washington Blvd

200'

W4-2L
36"x36"

LEFT LANE CLOSED AHEAD

W20-5L
36"x36"

Memorial Circle

**SEE SHEET N08**

| NO. | DATE | BY | REVISIONS |
|---|---|---|---|
| | | | |
| | | | |
| | | | |
| | | | |

U.S. DEPARTMENT OF TRANSPORTATION
FEDERAL HIGHWAY ADMINISTRATION
OFFICE OF FEDERAL LANDS HIGHWAY

0 50 100
SCALE IN FEET

GEORGE WASHINGTON MEMORIAL PARKWAY

# TEMPORARY TRAFFIC CONTROL PLAN FOR THE SIGNAL AND SIDEWALK IMPROVEMENT

STAGE 3

M:\PROJECTS\gwmp\11(4)\Proj_Dev\CADD\AMC Arch\N Sheets\NXX-XX-Memorial Circle_ttc.dgn [PHASE 3 - SHEET 2]

21 May 2026 6:19 PM

NPS PMIS No. XXXXXX NPS Drwg No. XXX/XXXX

| PROJECT | SHEET NUMBER |
|---|---|
| DC NP GWMP ARCH TAR 2026 | N09 |

N

*Memorial Circle*

15' (typ.)

## *LEGEND*

*Denotes Work Zone this stage*

*Denotes Traffic Drum*

| NO. | DATE | BY | REVISIONS |
|---|---|---|---|
| | | | |
| | | | |
| | | | |
| | | | |

U.S. DEPARTMENT OF TRANSPORTATION
FEDERAL HIGHWAY ADMINISTRATION
OFFICE OF FEDERAL LANDS HIGHWAY

0 25 50
SCALE IN FEET

GEORGE WASHINGTON MEMORIAL PARKWAY

# TEMPORARY TRAFFIC CONTROL PLAN FOR THE SIGNAL AND SIDEWALK IMPROVEMENT

STAGE 4

M:\PROJECTS\gwmp\11(4)\Proj_Dev\CADD\AMC Arch\N Sheets\NXX-XX-Memorial Circle_ ttc.dgn [PHASE 4 - SHEET]

21 May 2026 6:19 PM

NPS PMIS No. XXXXXX NPS Drwg No. XXX/XXXX

| PROJECT | SHEET NUMBER |
|---|---|
| DC NP GWMP ARCH TAR 2026 | N10 |

W20-5L
36"x36"

W4-2L
36"x36"

200'

200'

125'
TAPER

Mount Vernon Trail

GEORGE WASHINGTON MEMORIAL PKWY

WASHINGTON BLVD

DIRT PATH

DIRT PATH

Arlington

George Washington Memorial Pkwy

Washington Blvd

W4-3
36"x36"

N

END
DETOUR

M4-8a
24"x18"

Place temporary crosswalk

S Arlington Blvd

Rapid
Flashing
Beacon

W11-15
36"x36"

W16-7PL
21"x16"

M4-9aL
30"x24"

DETOUR

M4-9aR
30"x24"

DETOUR

Construct temporary
aggregate path

W6-3
36"x36"

STATE
LAW
STOP
FOR
IN
CROSSWALK

R1-6e
12"x36"
(double-
sided)

Rapid
Flashing
Beacon

Memorial Circle

W11-15
36"x36"

W16-7PR
21"x16"

Place temporary pavement markings,
white, 293 lnft

Place temporary pavement markings,
yellow, 2756 lnft

ROAD
CLOSED

R11-2
48"x30"

W1-6R
48"x24"

mounted on Type 3 barricade

R9-9
24"x12"

M4-9aR
30"x24"

SIDEWALK
CLOSED

DETOUR

R9-9
24"x12"

M4-9aR
30"x24"

mounted on Type 3 barricade

350'

Washington Blvd

ARLINGTON
MEMORIAL CIRCLE
CLOSED
AHEAD

W20-3 (mod.)
36"x36"

R11-2
48"x30"

W1-6L
48"x24"

mounted on Type 3 barricade

ROAD
CLOSED

SEE SHEET N12

## LEGEND

Type 3 barricade

Traffic Drum

| NO. | DATE | BY | REVISIONS |
|---|---|---|---|
| | | | |
| | | | |
| | | | |
| | | | |

U.S. DEPARTMENT OF TRANSPORTATION
FEDERAL HIGHWAY ADMINISTRATION
OFFICE OF FEDERAL LANDS HIGHWAY

0 50 100
SCALE IN FEET

GEORGE WASHINGTON MEMORIAL PARKWAY

# TEMPORARY TRAFFIC CONTROL PLAN FOR THE CONSTRUCTION OF THE ARCH

DETOUR ROUTE

M:\PROJECTS\gwmp\11(4)\Prof_Dev\CADD\AMC Arch\N Sheets\NXX-YX-Memorial Circle- ttc.dgn [DETOUR ROUTE - SHEET]

21 May 2026 6:19 PM

NPS PMIS No. XXXXXX NPS Drwg No. XXX/XXXX

| PROJECT | SHEET NUMBER |
|---|---|
| DC NP GWMP ARCH TAR 2026 | N11 |

**SEE SHEET N11**

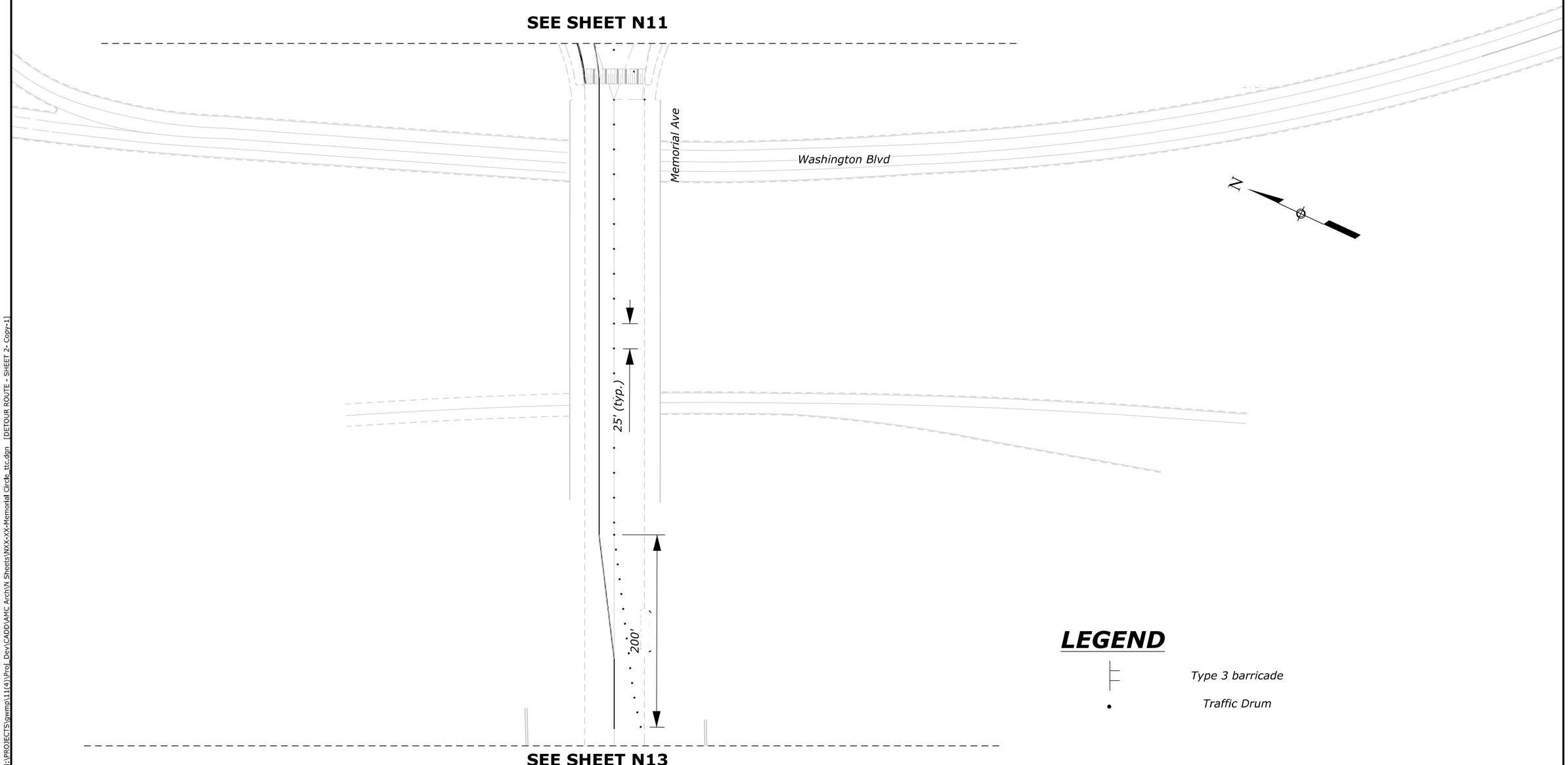


**SEE SHEET N13**

## LEGEND

Type 3 barricade

Traffic Drum

| NO. | DATE | BY | REVISIONS |
|---|---|---|---|
| | | | |
| | | | |
| | | | |
| | | | |

U.S. DEPARTMENT OF TRANSPORTATION
FEDERAL HIGHWAY ADMINISTRATION
OFFICE OF FEDERAL LANDS HIGHWAY

0 50 100
SCALE IN FEET

GEORGE WASHINGTON MEMORIAL PARKWAY

# TEMPORARY TRAFFIC CONTROL PLAN FOR THE CONSTRUCTION OF THE ARCH

DETOUR ROUTE

M:\PROJECTS\gwmp\11(4)\Proj_Dev\CADD\AMC Arch\N Sheets\NXX-XX-Memorial Circle_ttc.dgn [DETOUR ROUTE - SHEET 2 - Copy-1]

21 May 2026 6:19 PM

| PROJECT | SHEET NUMBER |
|---|---|
| DC NP GWMP ARCH TAR 2026 | N12 |

**SEE SHEET N12**

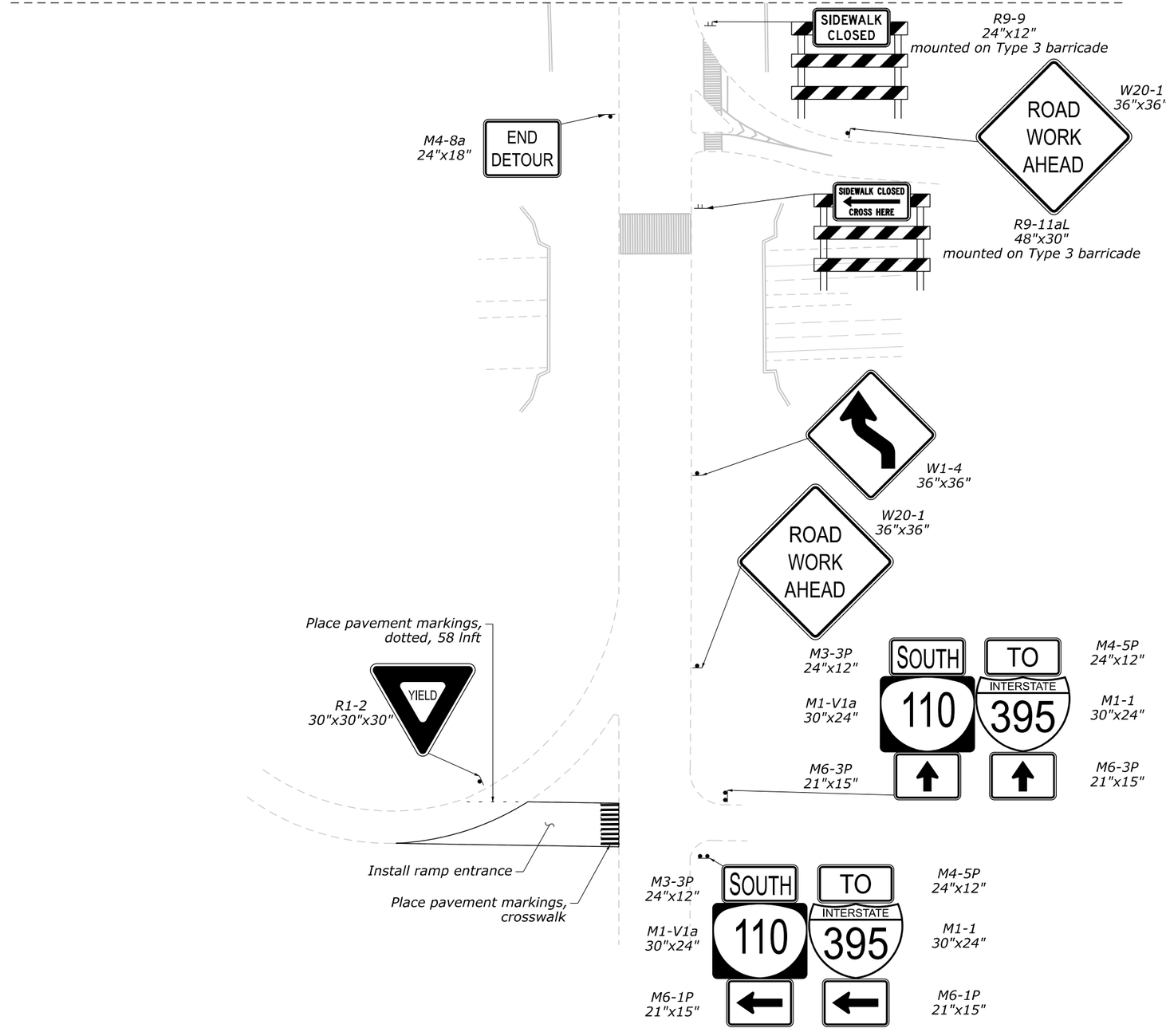


## LEGEND

Type 3 barricade

Traffic Drum

| NO. | DATE | BY | REVISIONS |
|---|---|---|---|
| | | | |
| | | | |
| | | | |
| | | | |

U.S. DEPARTMENT OF TRANSPORTATION
FEDERAL HIGHWAY ADMINISTRATION
OFFICE OF FEDERAL LANDS HIGHWAY

0 50 100
SCALE IN FEET

GEORGE WASHINGTON MEMORIAL PARKWAY

# TEMPORARY TRAFFIC CONTROL PLAN FOR THE CONSTRUCTION OF THE ARCH

DETOUR ROUTE

M:\PROJECTS\gwmp\11(4)\Proj_Dev\CADD\AMC Arch\N Sheets\NXX-XX-Memorial Circle_ttc.dgn [DETOUR ROUTE - SHEET 3]

21 May 2026 6:19 PM

NPS PMIS No. XXXXXX NPS Drwg No. XXX/XXXXXX

| PROJECT | SHEET NUMBER |
|---|---|
| DC NP GWMP ARCH TAR 2026 | P01 |

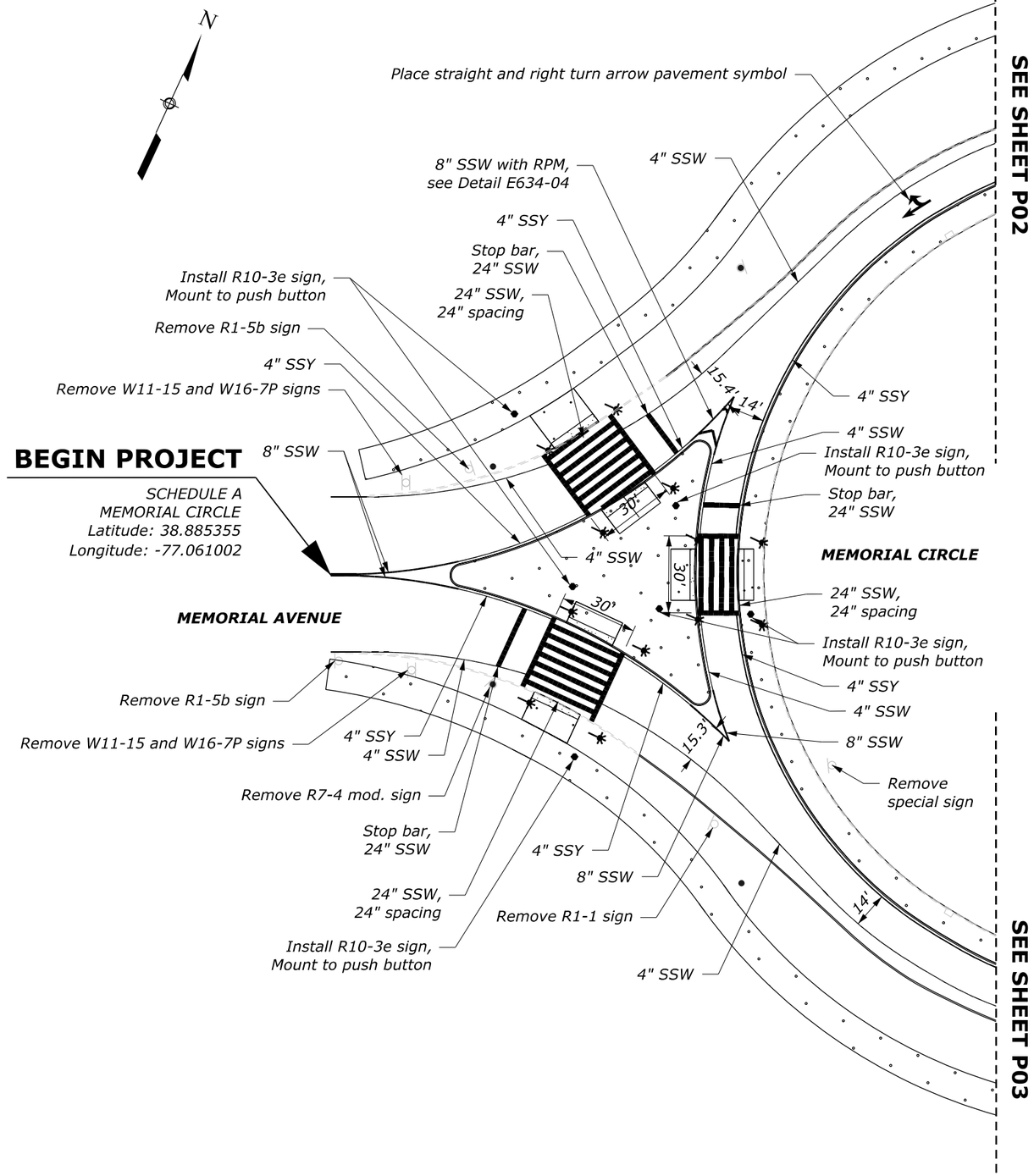


| NO. | DATE | BY | REVISIONS |
|---|---|---|---|
| | | | |
| | | | |
| | | | |
| | | | |

U.S. DEPARTMENT OF TRANSPORTATION
FEDERAL HIGHWAY ADMINISTRATION
OFFICE OF FEDERAL LANDS HIGHWAY

0 25 50
SCALE IN FEET

GEORGE WASHINGTON MEMORIAL PARK

# PAVEMENT MARKING AND SIGNING PLAN

M:\PROJECTS\gwmp\11(4)\Proj_Dev\CADD\AMC Arch\P01-P03_Memorial Circle.dgn [P01 (SHEET)]
21 May 2026 7:12 PM

NPS PMIS No. XXXXXX NPS Drwg No. XXX/XXXXXX

| PROJECT | SHEET NUMBER |
|---|---|
| DC NP GWMP ARCH TAR 2026 | P02 |

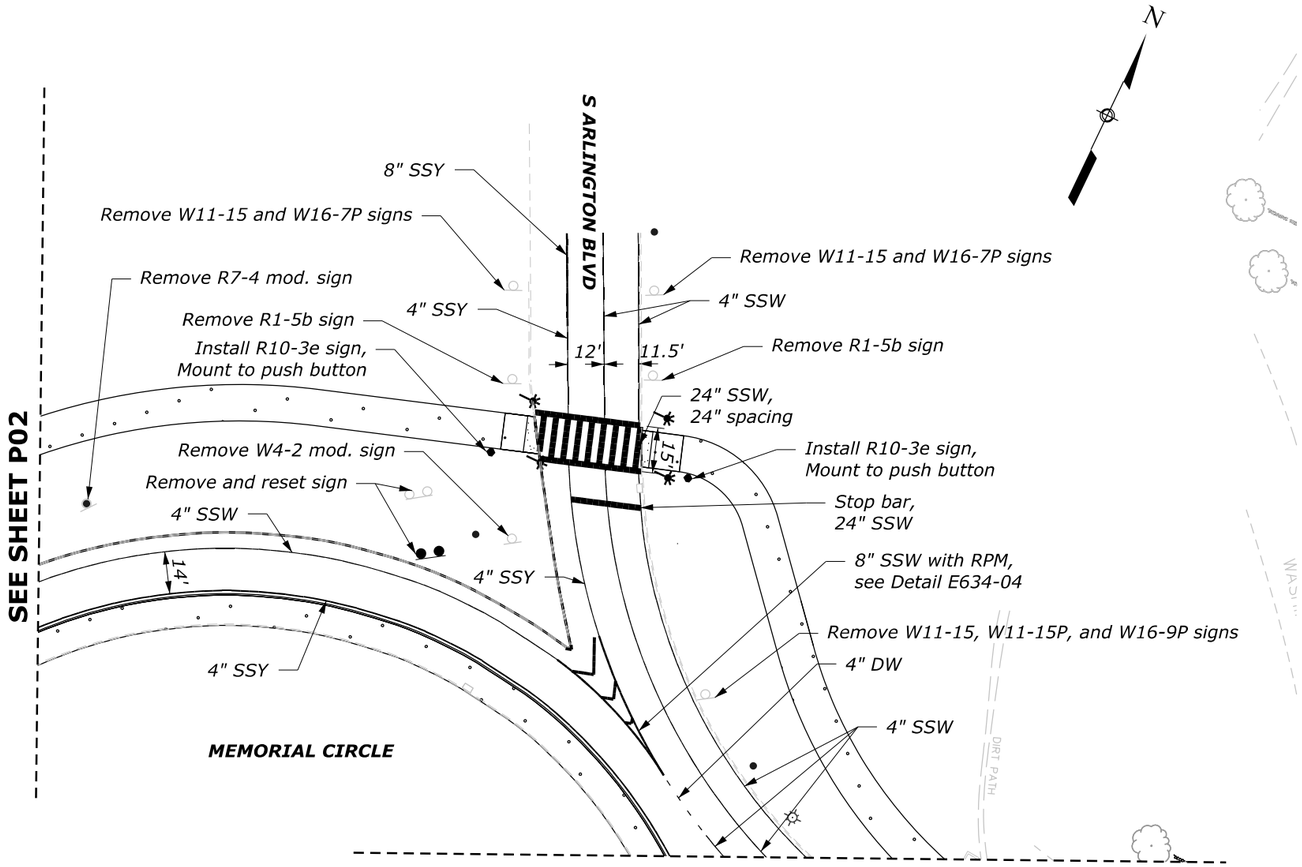


| NO. | DATE | BY | REVISIONS |
|---|---|---|---|
| | | | |
| | | | |
| | | | |
| | | | |

U.S. DEPARTMENT OF TRANSPORTATION
FEDERAL HIGHWAY ADMINISTRATION
OFFICE OF FEDERAL LANDS HIGHWAY

0 25 50
SCALE IN FEET

GEORGE WASHINGTON MEMORIAL PARK

# PAVEMENT MARKING AND SIGNING PLAN

M:\PROJECTS\gwmp\11(4)\Proj_Dev\CADD\AMC Arch\P01-P03_Memorial Circle.dgn [P02 SHEET]
21 May 2026 7:12 PM

NPS PMIS No. XXXXXX NPS Drwg No. XXX/XXXXXX

| PROJECT | SHEET NUMBER |
|---|---|
| DC NP GWMP ARCH TAR 2026 | P03 |

SEE SHEET P02

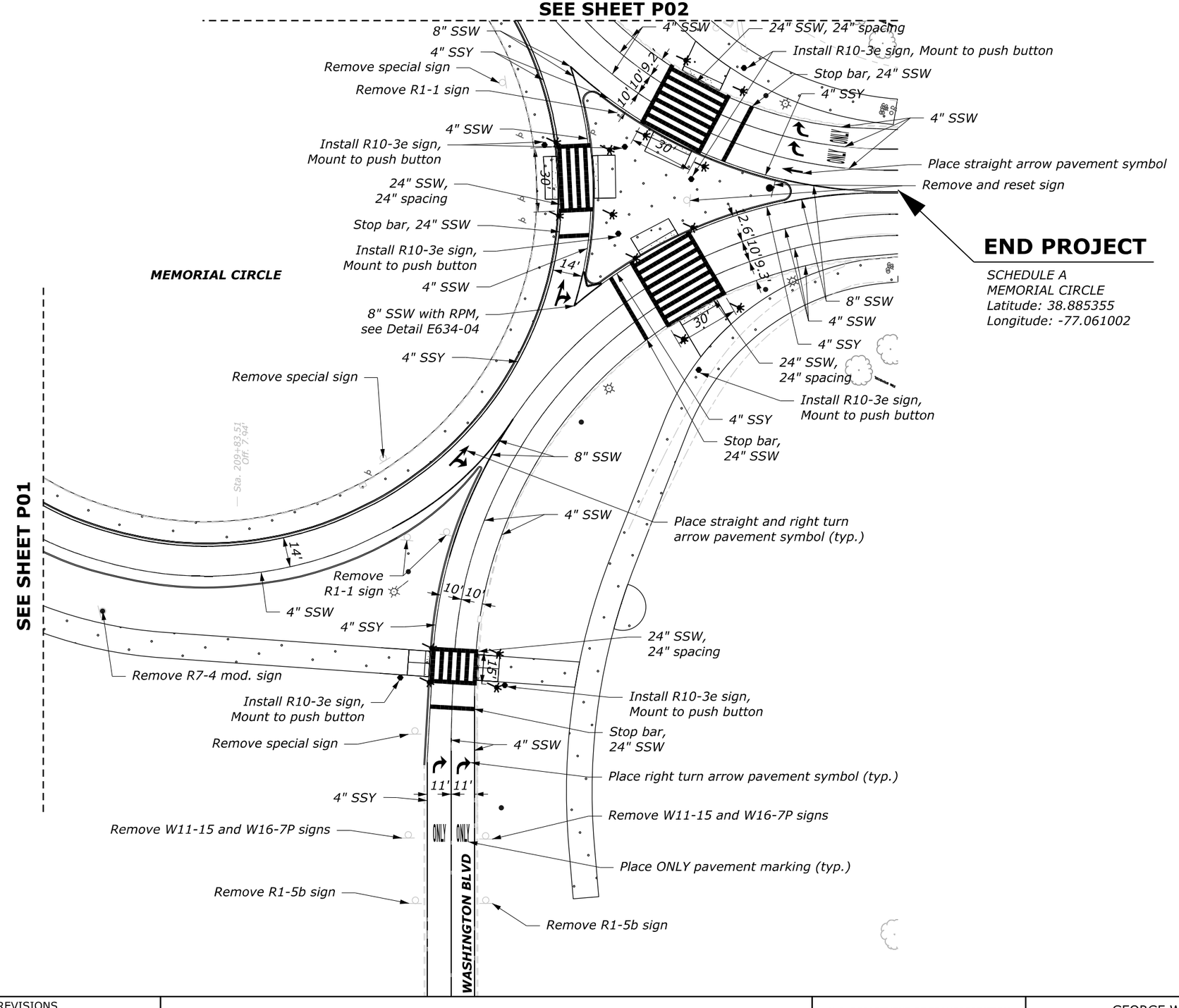


| NO. | DATE | BY | REVISIONS |
|---|---|---|---|
| | | | |
| | | | |
| | | | |
| | | | |

U.S. DEPARTMENT OF TRANSPORTATION
FEDERAL HIGHWAY ADMINISTRATION
OFFICE OF FEDERAL LANDS HIGHWAY

0 25 50
SCALE IN FEET

GEORGE WASHINGTON MEMORIAL PARK

# PAVEMENT MARKING AND SIGNING PLAN

21 May 2026 7:12 PM M:\PROJECTS\gwmp\11(4)\Proj_Dev\CADD\AMC Arch\P01-P03_Memorial Circle.dgn [P03 [SHEET]]

| PROJECT | SHEET NUMBER |
|---|---|
| DC NP GWMP ARCH TAR 2026 | S01 |

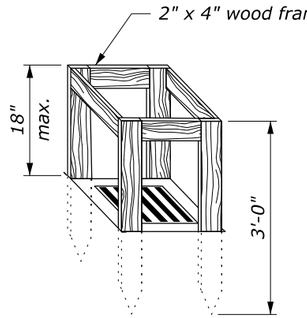


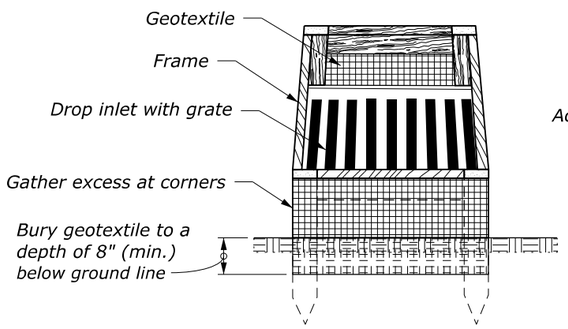


## SILT FENCE DROP INLET PROTECTION (TYPE A)

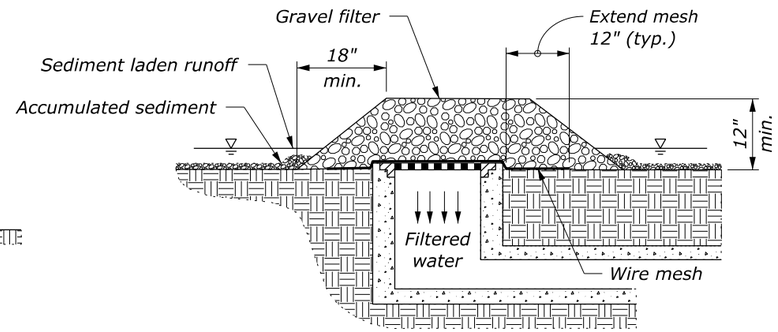


## GRAVEL AND WIRE MESH DROP INLET PROTECTION (TYPE B)

### NOTE:

1. For gravel filters use 2" to 3" diameter coarse aggregate.
2. Use wire mesh with ½" x ½" openings.
3. Use type A inlet protection in sump locations only.
4. Use type B inlet protection only in sump locations where heavy concentrated flows are not expected. Do not use where ponding around the structure might cause inconvenience or damage.
5. Provide silt fence drop inlet protection geotextile conforming to subsection 713.16(a).

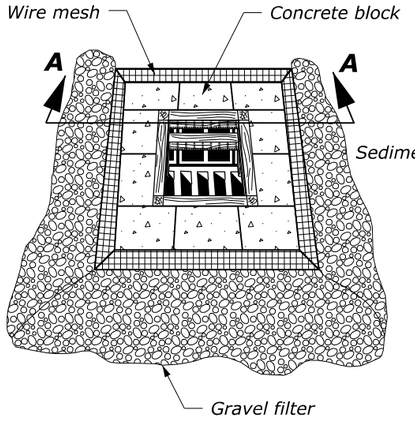


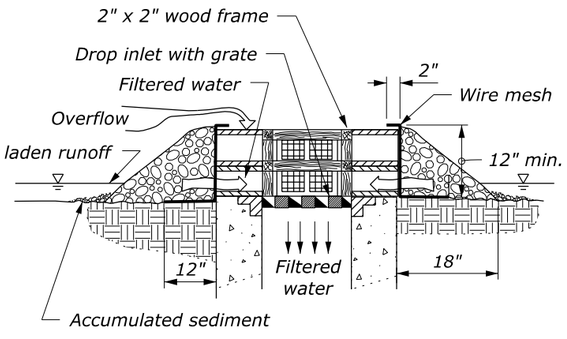


SECTION A-A

## BLOCK AND GRAVEL DROP INLET PROTECTION (TYPE C)

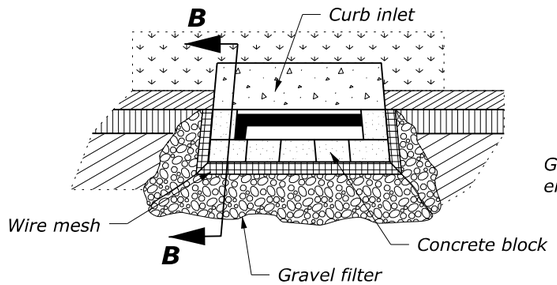


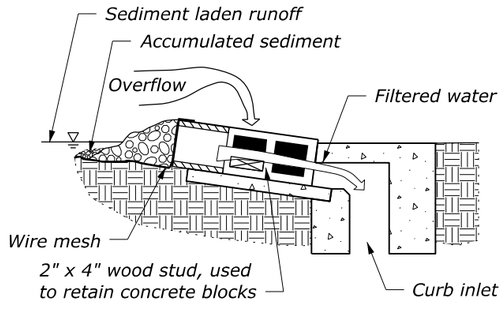


SECTION B-B

## CURB INLET PROTECTION, BLOCK AND GRAVEL (TYPE D)

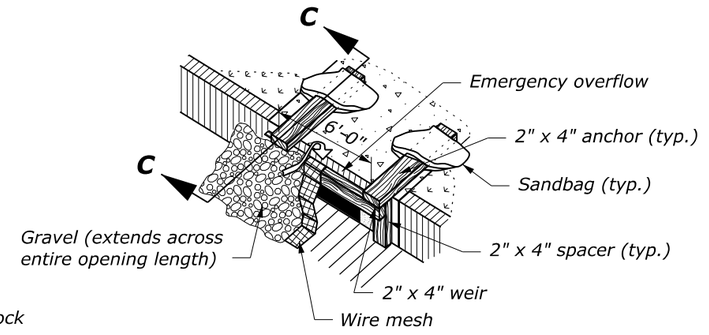


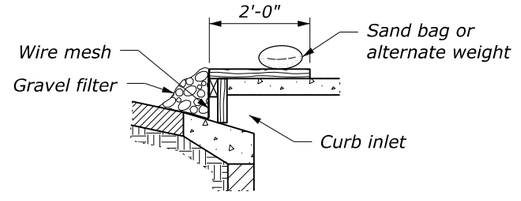


SECTION C-C

## CURB INLET PROTECTION, WOODEN WEIR (TYPE E)

NO SCALE

| U.S. DEPARTMENT OF TRANSPORTATION, FHWA<br>OFFICE OF FEDERAL LANDS HIGHWAY | FLH STANDARD<br>157-2 |
|---|---|
| **TEMPORARY INLET PROTECTION** | SPECIFICATION<br>FP-24, FP-14 |
| | APPROVED FOR USE<br>1/2024 |

M:\PROJECTS\gwmp\11(4)\Proj_Dev\CADD\AMC Arch\Std-Det\Std157-2.dgn [Std 157-2]
21 May 2026 1:49 PM

| PROJECT | SHEET NUMBER |
|---|---|
| DC NP GWMP ARCH TAR 2026 | S02 |

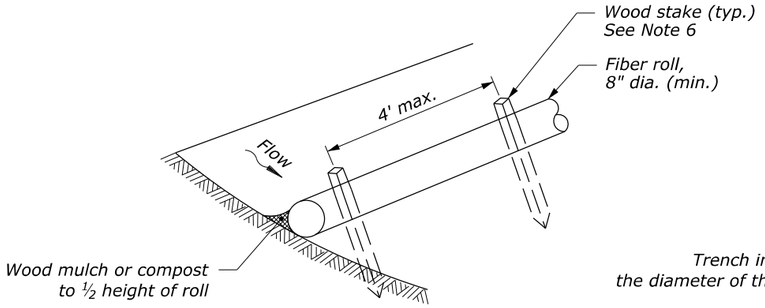


UNTRENCHED INSTALLATION

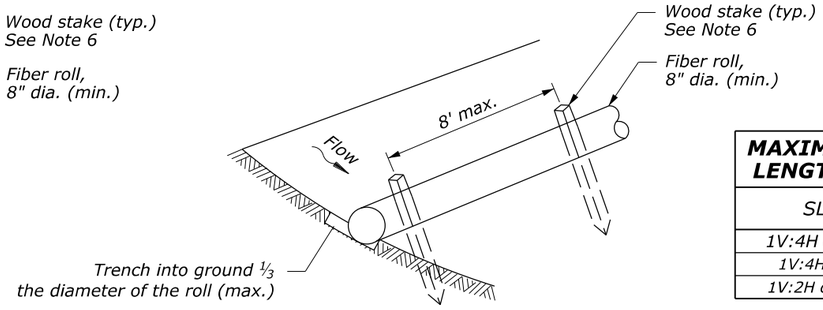


ENTRENCHED INSTALLATION

## FIBER ROLL ISOMETRIC VIEW

| MAXIMUM ALLOWABLE SLOPE LENGTH ABOVE FIBER ROLLS | |
|---|---|
| SLOPE | MAX INTERVAL |
| 1V:4H or Flatter | 20 ft |
| 1V:4H - 1V:2H | 15 ft |
| 1V:2H or Steeper | 10 ft |

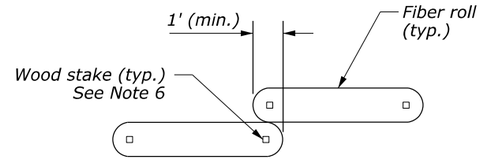


## FIBER ROLL OVERLAP

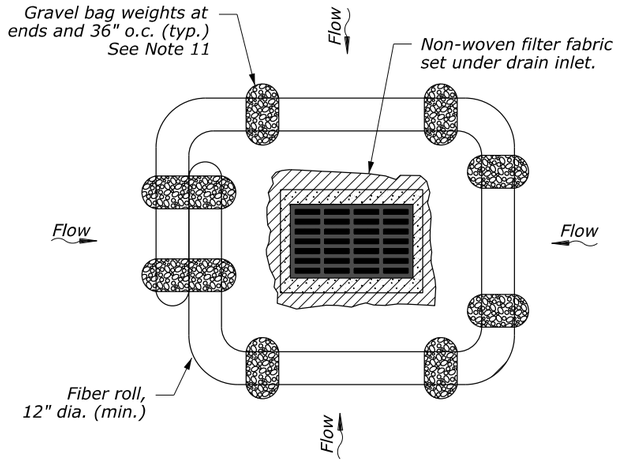


## INLET PROTECTION

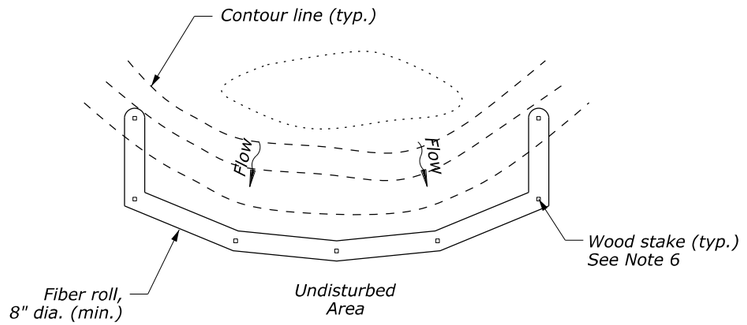


## PLAN VIEW

## NOTES:

1. Provide fiber rolls meeting the requirements of Subsection 713.12.
2. Use fiber rolls with a minimum 8-inch diameter. For drain inlet protection, use fiber rolls with a minimum 12-inch diameter.
3. Prior to installation, clear all obstructions including rocks, clods, and debris greater than 1-inch that may interfere with proper function of the fiber roll.
4. For untrenched installation, blow or hand place mulch or compost on uphill side of the slope along the fiber roll.
5. Place fiber rolls on level grade and parallel to contours. Extend both ends of the fiber roll at least 8 feet upslope at 45 degrees to the main alignment.
6. Use wood stakes with a minimum nominal cross section of 2- by 2-inch and of sufficient length to attain a minimum of 12 inches into the ground and 3 inches protruding above the roll. Provide wood stakes meeting the requirements of Subsection 713.08(a).
7. When more than one fiber roll is needed, overlap ends 12 inches minimum and stake.
8. Remove sediment deposits when accumulation is one-half the height of the exposed fiber roll.
9. Replace biodegradable fiber rolls 6 months after installation and photodegradable fiber rolls 12 months after installation.
10. When fiber rolls are required on paved surfaces, use gravel bags to support them as shown on the inlet protection view.
11. Provide gravel bag weights meeting the requirements of Subsection 713.13.

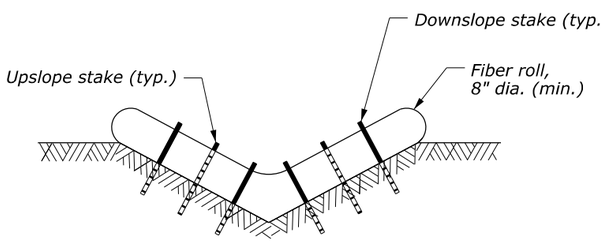


V-DITCH

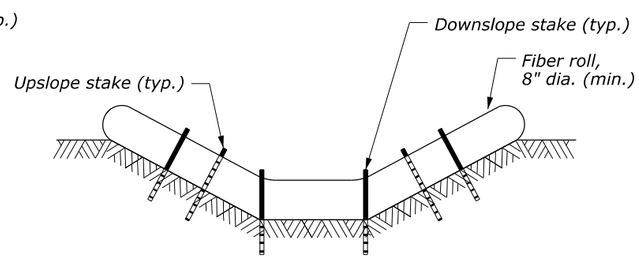


TRAPEZOIDAL DITCH

## FIBER ROLL CHECK DAM CROSS-SECTIONS

| FIBER ROLL CHECK DAM SPACING TABLE | | |
|---|---|---|
| DITCH GRADE * | CHECK DAM SPACING (S)** | |
| | 8" HIGH | 12" HIGH |
| 2% | 33' | 50' |
| 3% | 22' | 33' |
| 4% | 16' | 25' |
| 5% | 13' | 20' |

* Do not install check dams on grades below 2%
** Adjust spacing as approved based on site conditions

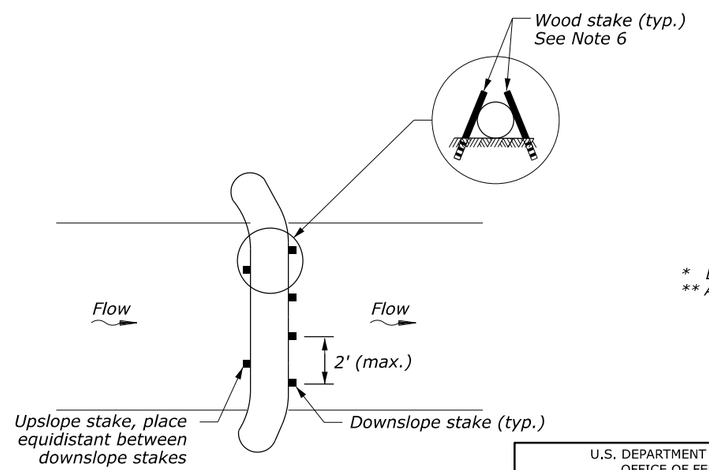


## FIBER ROLL CHECK DAM PLAN VIEW

NO SCALE

U.S. DEPARTMENT OF TRANSPORTATION, FHWA
OFFICE OF FEDERAL LANDS HIGHWAY

**FIBER ROLL**

EFLHD DETAIL
E157-04

SPECIFICATION
FP-24, FP-14

APPROVED FOR USE
05/2024

M:\PROJECTS\gwmp\11(4)\Proj_Dev\CADD\AMC Arch\Std-Det\E157-04.dgn [Sheet]
21 May 2026 1:54 PM

| PROJECT | SHEET NUMBER |
|---|---|
| DC NP GWMP ARCH TAR 2026 | S03 |

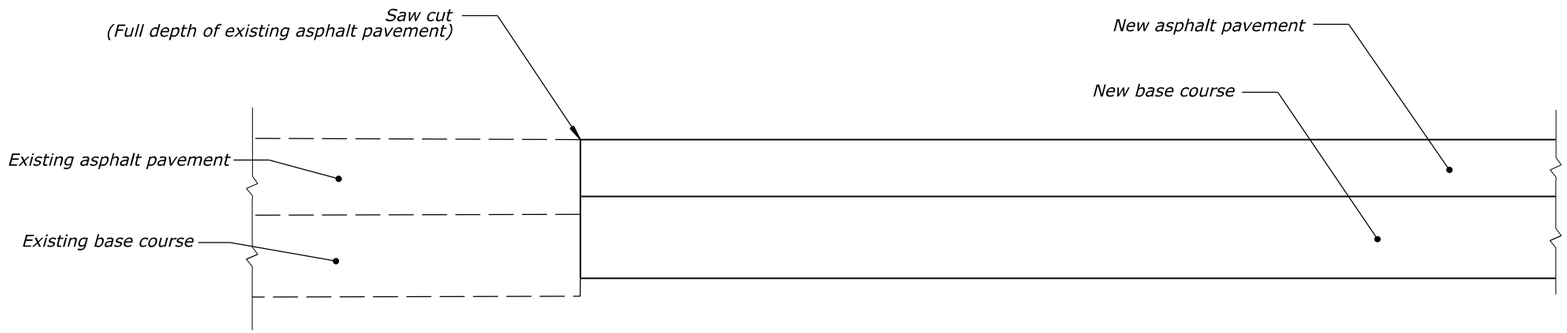


## NEW PAVEMENT

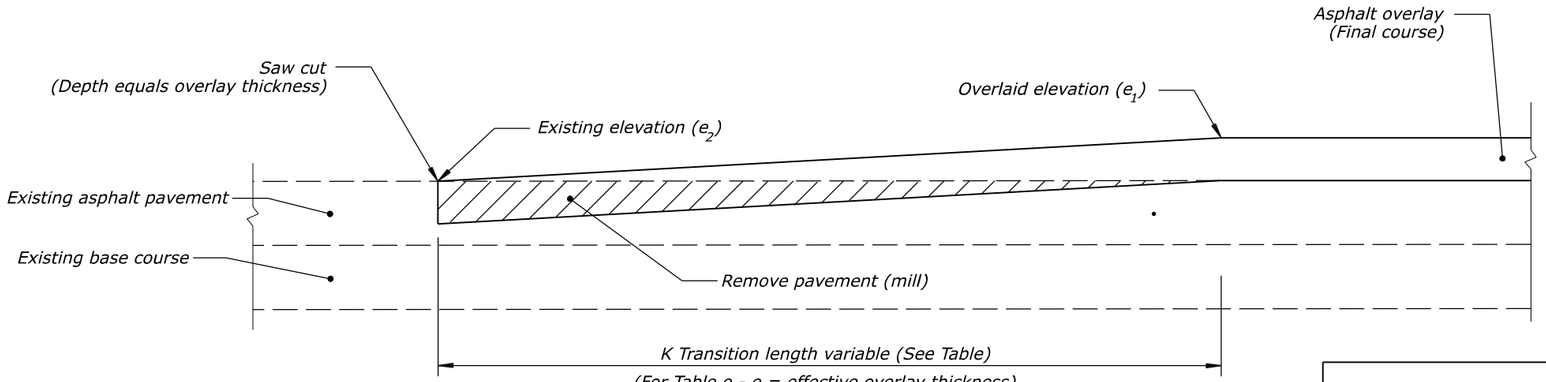


## OVERLAY

### NOTE:

*Provide a transition length in feet that is not less than the value obtained by multiplying the effective overlay thickness in inches (difference between the existing and overlaid elevations) by the K value from the Table for the posted speed of the roadway.*

*Use $K*[e_1 - e_2] = T$, or $K*[d_1 - d_2] = T$ (whichever applies), to obtain the transition length. (Minimum transition length=30 feet)*

*Example :*
*If the posted speed is 55 MPH*
*Effective overlay thickness = 2 inches*
*Then the minimum transition length =*
*2 inches x 42.5 ft./in. = 85 feet.*

**K VALUE TABLE (ft/in)**

| POSTED SPEED (MPH) * | 30 | 35 | 40 | 45 | 50 | 55 | 60 | 65 | 70 | 75 |
|---|---|---|---|---|---|---|---|---|---|---|
| K | 30 | 32.5 | 35 | 37.5 | 40 | 42.5 | 45 | 47.5 | 50 | 52.5 |

* Use a K Value of 30 for speeds less than 30 MPH.

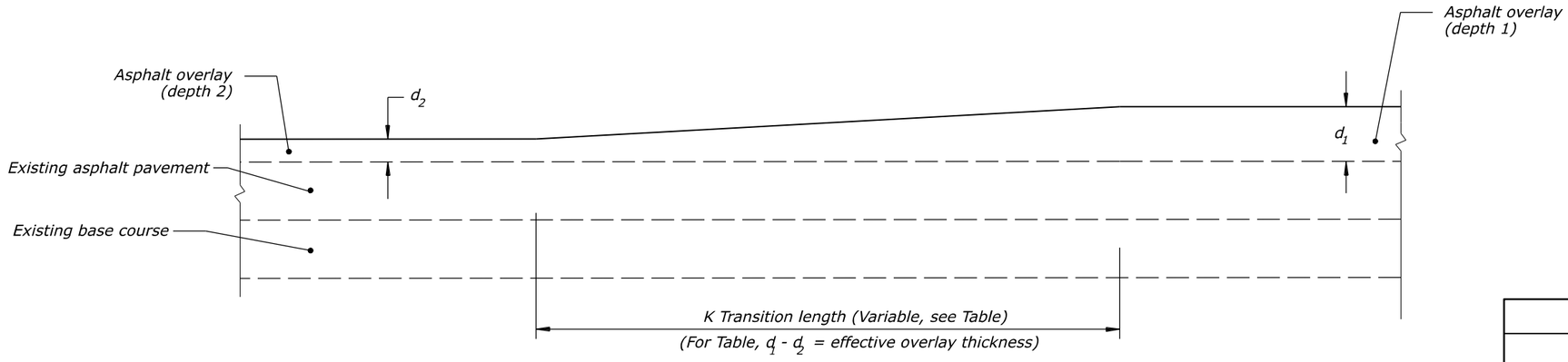


## OVERLAY - DEPTH TRANSITIONS

NO SCALE

U.S. DEPARTMENT OF TRANSPORTATION, FHWA
OFFICE OF FEDERAL LANDS HIGHWAY

**PAVEMENT TRANSITIONS**

| EFLHD DETAIL |
|---|
| E401-01 |
| SPECIFICATION |
| FP-24, FP-14 |
| APPROVED FOR USE |
| 05/2024 |

M:\PROJECTS\gwmp\11(4)\Proj_Dev\CADD\AMC Arch\Std-Det\E401-01.dgn [Sheet]
21 May 2026 1:33 PM

| PROJECT | SHEET NUMBER |
|---|---|
| DC NP GWMP ARCH TAR 2026 | S04 |

## NOTE:

*Place transverse expansion joints at intervals of not more than 60 feet for curbs and sidewalks.*

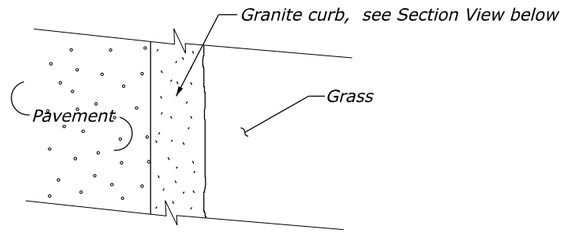


PLAN VIEW

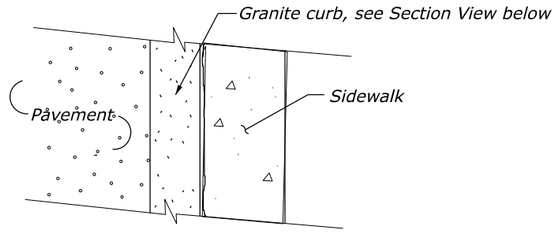


PLAN VIEW

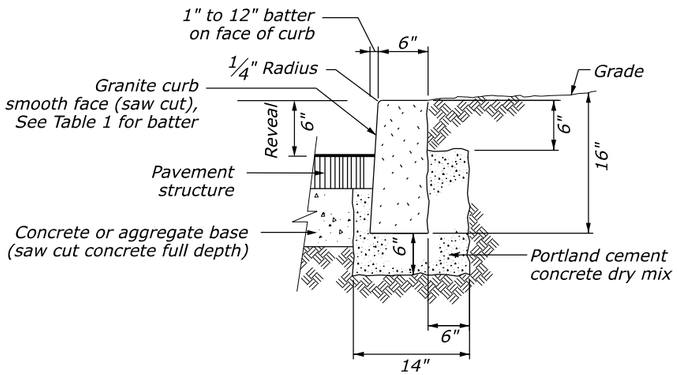


SECTION VIEW

**STONE CURB TYPE 1, 16" DEPTH (GRANITE TYPE A OR B) (WITHOUT SIDEWALK)**

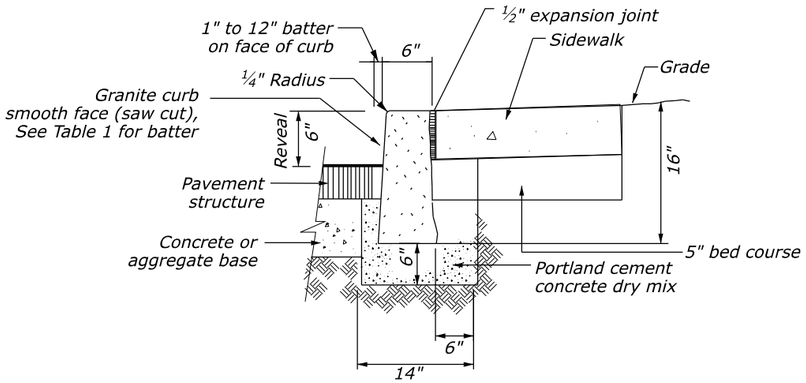


SECTION VIEW

**STONE CURB TYPE 1, 16" DEPTH (GRANITE TYPE A OR B) (WITH SIDEWALK)**

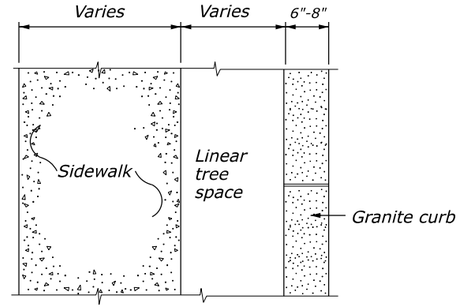


PLAN VIEW

**STONE CURB TYPE 1, 16" DEPTH (GRANITE TYPE A OR B) (WITH SIDEWALK AND LINEAR TREE SPACE)**

### TABLE 1

| BATTER FOR GRANITE CURB | |
|---|---|
| **TYPE** | **BATTER (H:V)** |
| A | 1:12 |
| B | 3/4:10 |

NO SCALE

U.S. DEPARTMENT OF TRANSPORTATION, FHWA
OFFICE OF FEDERAL LANDS HIGHWAY

# GRANITE CURBS

EFLHD DETAIL
E609-02

SPECIFICATION
FP-24. FP-14

APPROVED FOR USE
05/2024

M:\PROJECTS\gwmp\11(4)\Proj_Dev\CADD\AMC Arch\Std-Det\E609-02.dgn [Sheet]
21 May 2026 2:31 PM

| PROJECT | SHEET NUMBER |
|---|---|
| DC NP GWMP ARCH TAR 2026 | S05 |

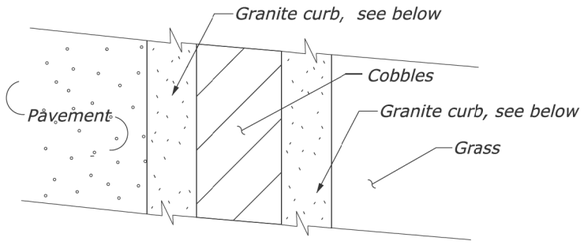


**PLAN**

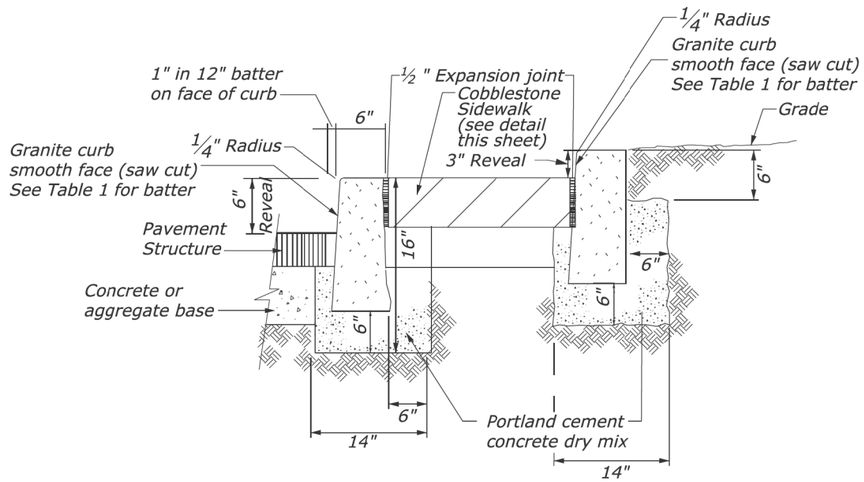


**SECTION**

*(WITH COBBLES)*

*STONE CURB TYPE 1, 16" DEPTH (GRANITE TYPE A OR B)*

*NOTE:*

*Place transverse expansion joints at intervals of not more than 60 feet for curbs and sidewalks.*

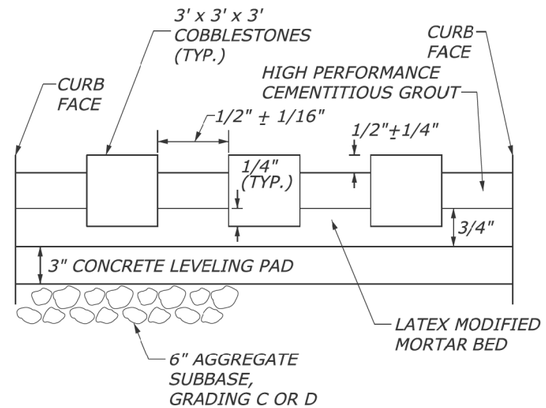


**COBBLESTONE SIDEWALK DETAIL (NTS)**

*NO SCALE*

| U.S. DEPARTMENT OF TRANSPORTATION, FHWA OFFICE OF FEDERAL LANDS HIGHWAY | EFLHD DETAIL E609-02A |
|---|---|
| **EXPOSED AGGREGATE CONCRETE SIDEWALK** | |

M:\PROJECTS\gwmp\11(4)\Proj_Dev\CADD\AMC Arch\Std-Det\E609-02A_Granite Curb w Cobbles.dgn [Sheet]
21 May 2026 2:32 PM

| PROJECT | SHEET NUMBER |
|---|---|
| DC NP GWMP ARCH TAR 2026 | S06 |

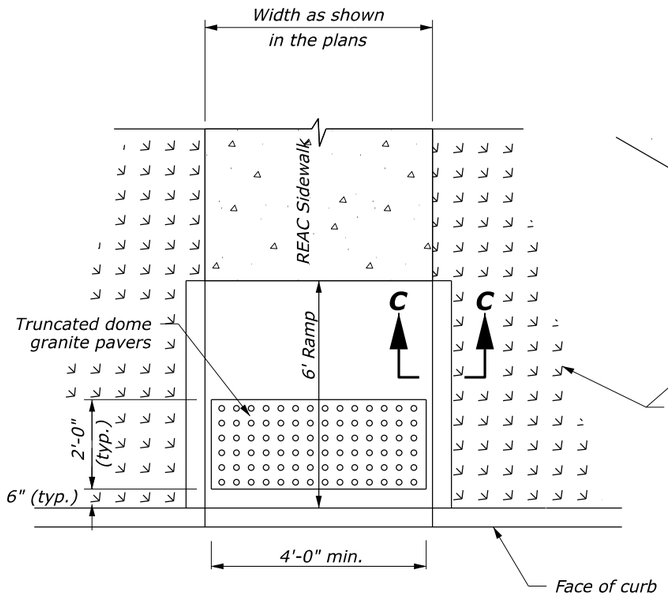


PLAN VIEW

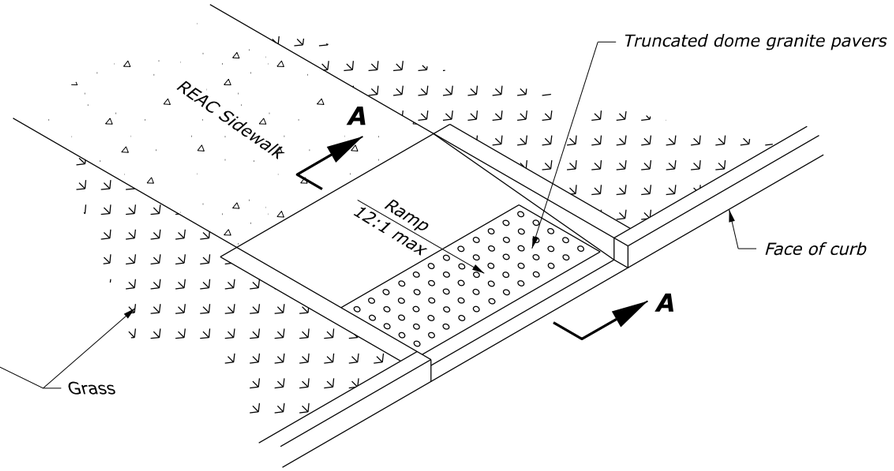


ISOMETRIC VIEW

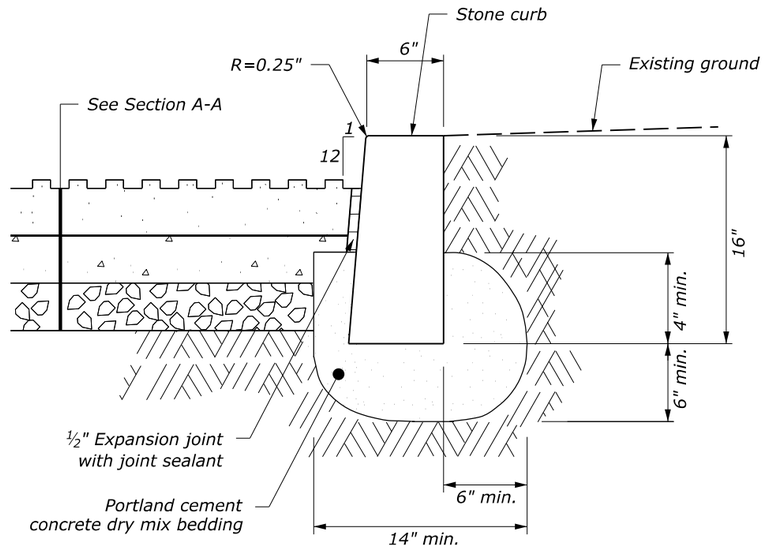


SECTION C-C

# TYPE C RAMP

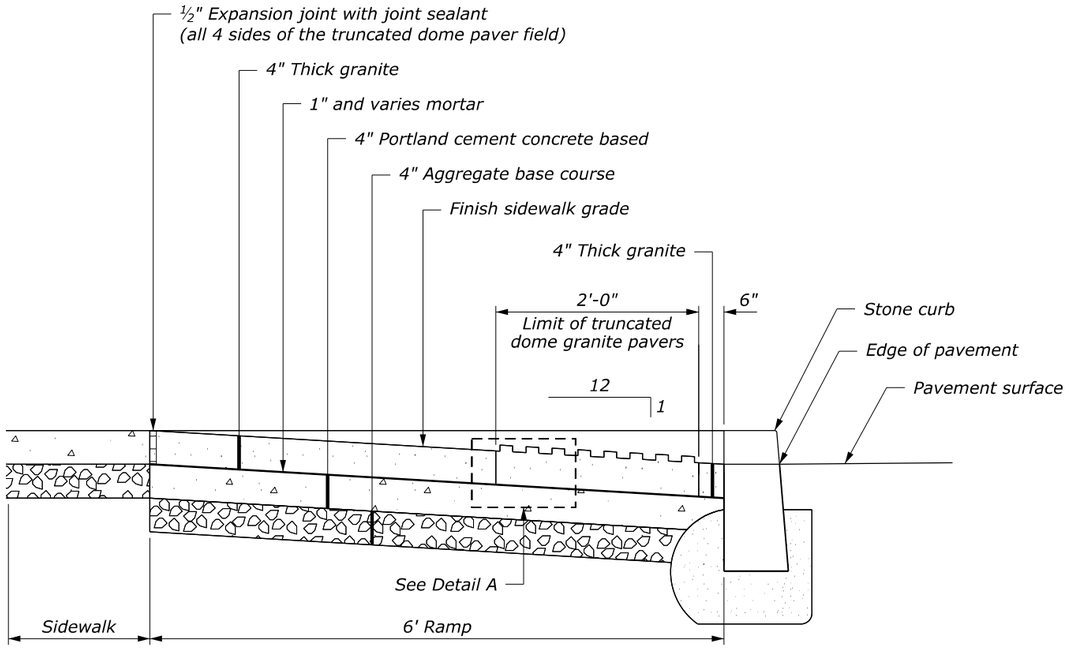


SECTION A-A

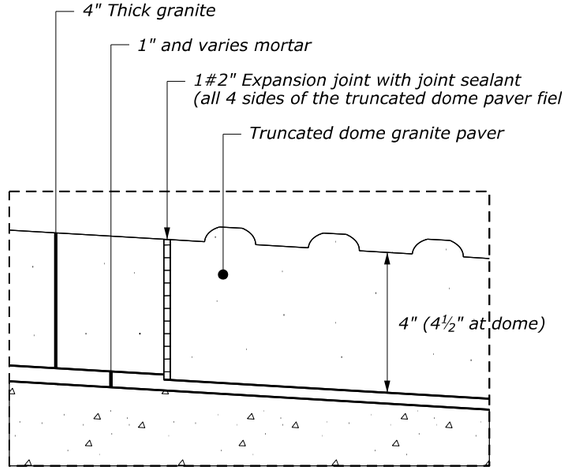


DETAIL A

NO SCALE

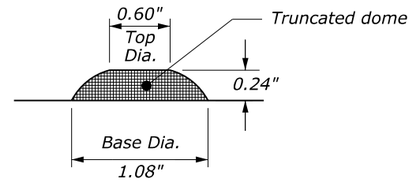


ELEVATION VIEW

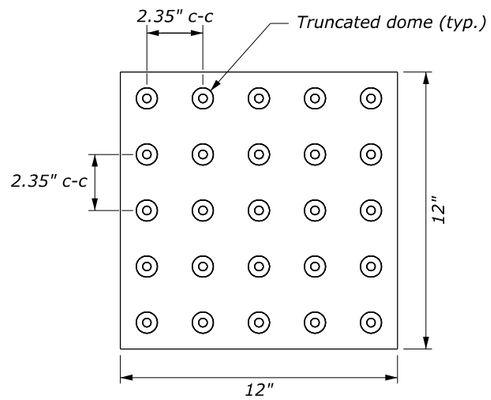


PLAN VIEW

## TRUNCATED DOMES PAVERS

| U.S. DEPARTMENT OF TRANSPORTATION, FHWA<br>OFFICE OF FEDERAL LANDS HIGHWAY | EFLHD DETAIL<br>E610-A |
|---|---|
| **STONE ACCESSIBILITY RAMP CURB RETURN** | |

M:\PROJECTS\gwmp\11(4)\Proj_Dev\CADD\AMC Arch\Std-Det\std610A_AccessibilityTyp-Ramp.dgn [615-4]

21 May 2026 2:40 PM

| PROJECT | SHEET NUMBER |
|---|---|
| DC NP GWMP ARCH TAR 2026 | S07 |

*NOTES:*

1. *Place 1/2-inch transverse expansion joints as directed.*
2. *Place 1/4-inch wide dummy joints to match the adjacent curb or at intervals equal to the width as directed. Place dummy joints to 1/3-inch depth of the sidewalk.*
3. *Finish sidewalks according to Subsection 615.04(b).*
4. *Place construction joints around all structures in the sidewalk.*
5. *Place welded wire fabric on chairs.*

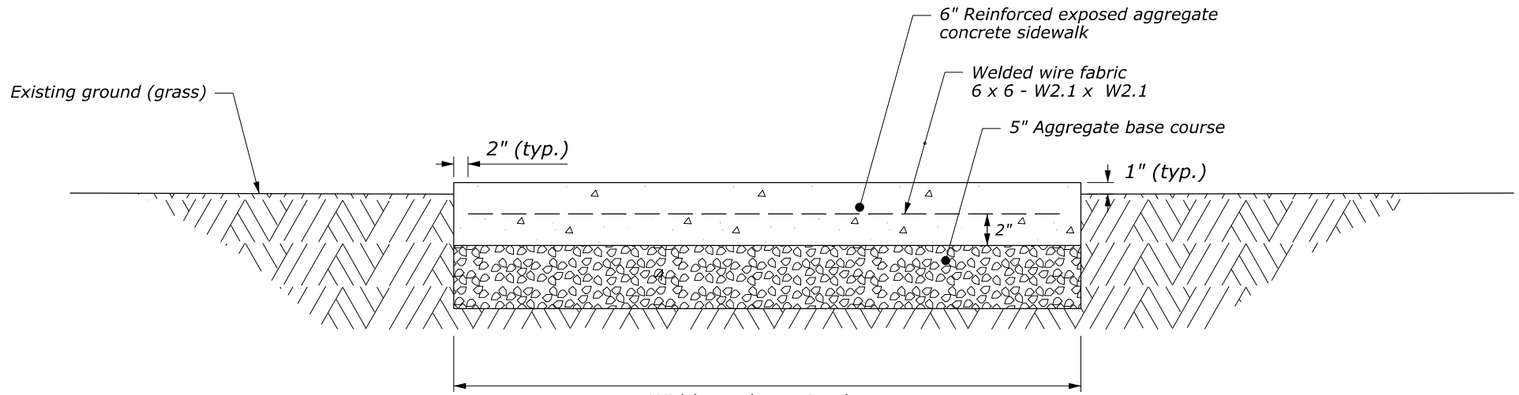


***SIDEWALK WITHOUT CURB***

*NO SCALE*

| U.S. DEPARTMENT OF TRANSPORTATION, FHWA<br>OFFICE OF FEDERAL LANDS HIGHWAY | EFLHD DETAIL<br>E610-B |
|---|---|
| **EXPOSED AGGREGATE CONCRETE SIDEWALK** | |

M:\PROJECTS\gwmp\11(4)\Prof_Dev\CADD\AMC Arch\Std-Det\st610B_Exp-Aggregate-Sidewalk.dgn [Sheet]
21 May 2026 2:35 PM

| PROJECT | SHEET NUMBER |
|---|---|
| DC NP GWMP ARCH TAR 2026 | S08 |

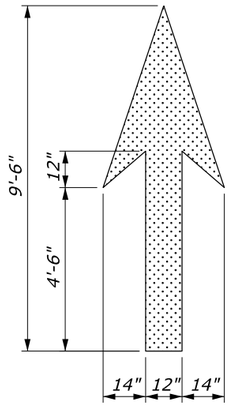


**STRAIGHT ARROW SYMBOL**

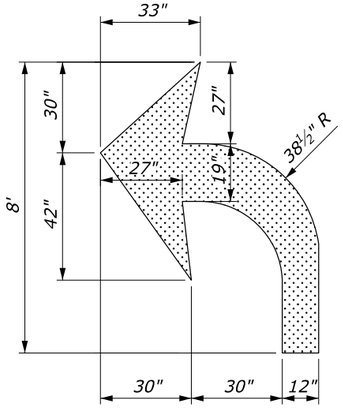


**TURN ARROW SYMBOL**

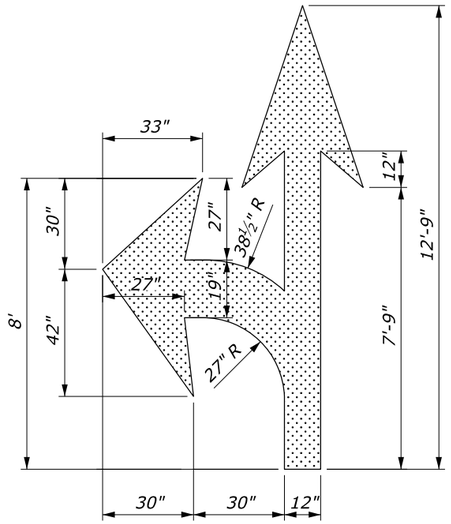


**STRAIGHT/TURN ARROW COMBINATION SYMBOL**

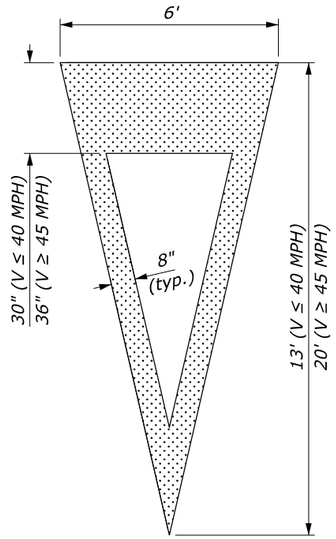


**YIELD AHEAD TRIANGLE SYMBOL**

## NOTES:

1. Place pavement word and symbol markings in accordance with the "Manual on Uniform Traffic Control Devices" (MUTCD), latest edition.
2. Place all letters, numerals, and symbols in accordance with the "Standard Highway Signs", latest edition.
3. Provide Accessibility Symbol marking as indicated in the plans or directed otherwise by the CO in one of the following configurations:

   (a) w/ Symbol only; or
   (b) w/ Symbol, blue background, and white border

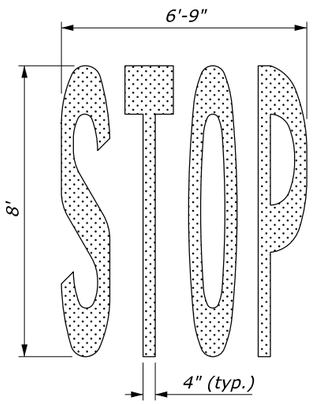


**"STOP" WORD MESSAGE**

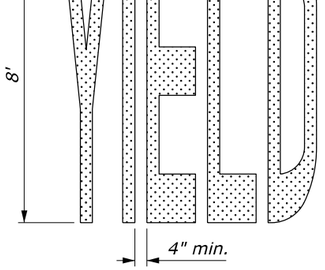


**"YIELD" WORD MESSAGE**

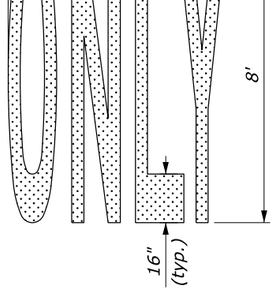


**"ONLY" WORD MESSAGE**

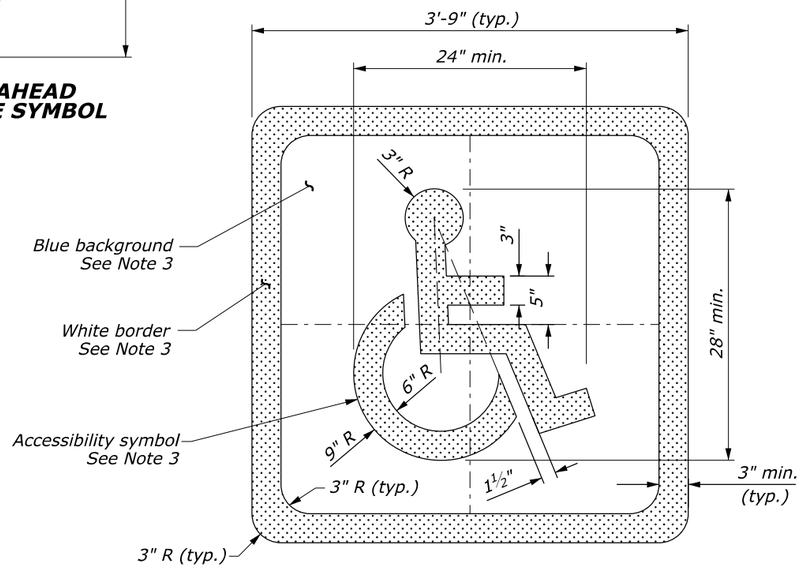


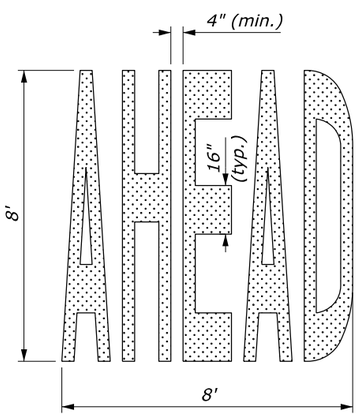


**"AHEAD" WORD MESSAGE**

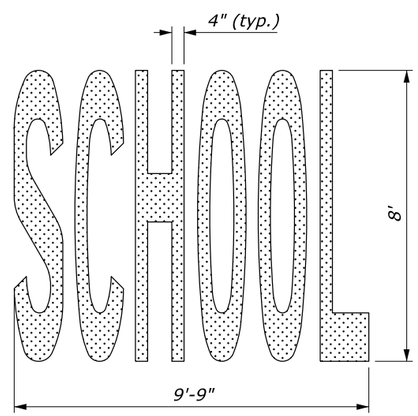


**"SCHOOL" WORD MESSAGE**

| PAVEMENT MARKING AREAS | |
|---|---|
| TYPE | SQFT |
| Accessibility Symbol: | -- |
| w/ Symbol only | 2 |
| w/ Symbol, blue background, and white border | 16 |
| Straight Arrow Symbol | 12 |
| Straight/Turn Arrow Combination Symbol | 26 |
| Turn Arrow Symbol | 16 |
| Yield Ahead Triangle Symbol (V<45 mph) | 26 |
| Yield Ahead Triangle Symbol (V≥45 mph) | 37 |
| "AHEAD" Word Message Marking | 30 |
| "ONLY" Word Message Marking | 21 |
| "SCHOOL" Word Message Marking | 33 |
| "STOP" Word Message Marking | 22 |
| "YIELD" Word Message Marking | 24 |

NO SCALE

U.S. DEPARTMENT OF TRANSPORTATION, FHWA
OFFICE OF FEDERAL LANDS HIGHWAY

# PAVEMENT MARKINGS SYMBOLS AND WORDS

EFLHD DETAIL
E634-01

SPECIFICATION
FP-24, FP-14

APPROVED FOR USE
06/2024

M:\PROJECTS\gwmp\11(4)\Proj_Dev\CADD\AMC Arch\Std-Det\E634-01.dgn [Sheet]
21 May 2026 2:33 PM

| PROJECT | SHEET NUMBER |
|---|---|
| DC NP GWMP ARCH TAR 2026 | S09 |

## NOTES:

1. *Provide reflective markers with either clear (white), yellow or red colors as specified.*
2. *Ensure the shell of the marker is made of one color or a combination of colors the same as the reflector.*

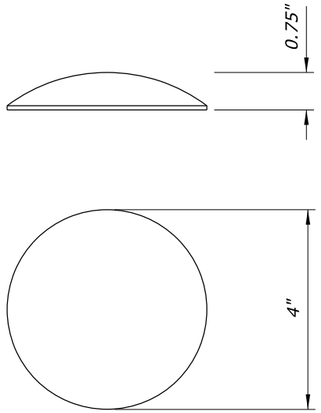


NON-REFLECTIVE

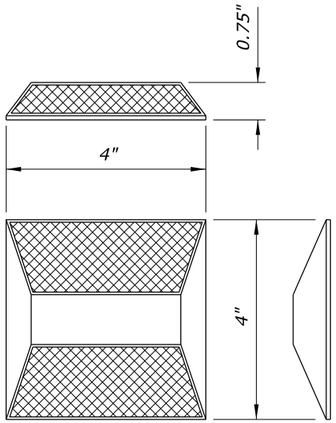


BI-DIRECTIONAL

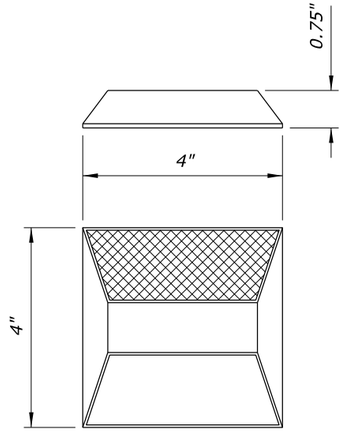


MONO-DIRECTIONAL

## *NON-PLOWABLE PAVEMENT MARKERS*

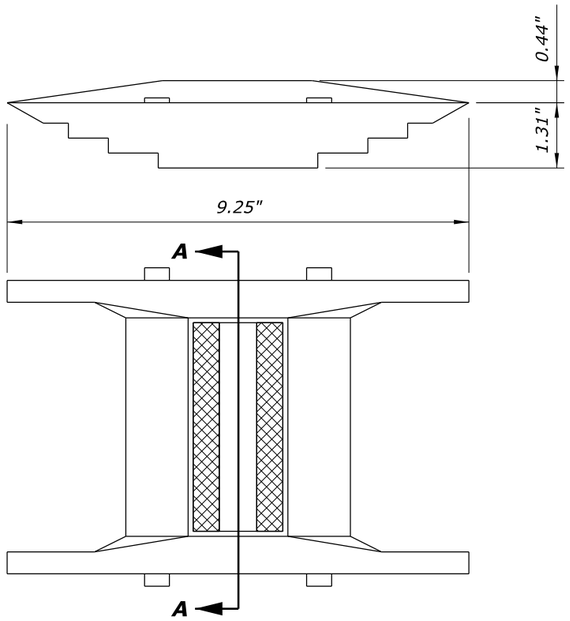


BI-DIRECTIONAL

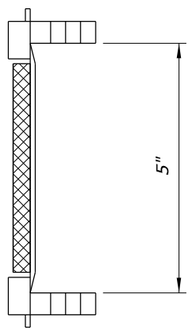


SECTION A-A

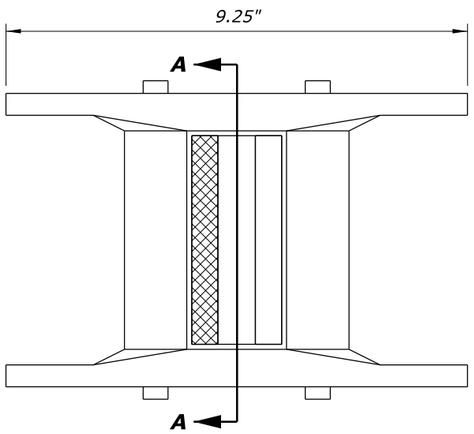


MONO-DIRECTIONAL

***LEGEND:***

*Reflective material*

## *PLOWABLE PAVEMENT MARKERS*

*NO SCALE*

| U.S. DEPARTMENT OF TRANSPORTATION, FHWA<br>OFFICE OF FEDERAL LANDS HIGHWAY | EFLHD DETAIL<br>E634-02 |
|---|---|
| **RAISED PAVEMENT MARKERS** | SPECIFICATION<br>FP-24, FP-14 |
| | APPROVED FOR USE<br>06/2024 |

M:\PROJECTS\gwmp\11(4)\Proj_Dev\CADD\AMC Arch\Std-Det\E634-02.dgn [Sheet]
21 May 2026 2:33 PM

| PROJECT | SHEET NUMBER |
|---|---|
| DC NP GWMP ARCH TAR 2026 | S10 |

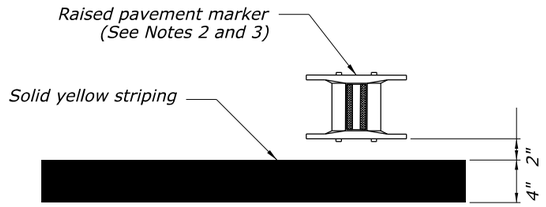


**VIEW A**

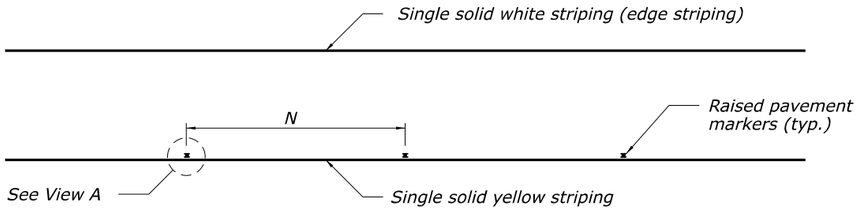


**SINGLE SOLID YELLOW STRIPING
WITH RAISED PAVEMENT MARKERS**

## NOTES:

1. Install striping in accordance with the "Manual on Uniform Traffic Control Devices" (MUTCD), latest edition.
2. When raised pavement markers are required, space and install in accordance with the MUTCD and as shown in this Detail or as directed.
3. When raised pavement markers are required, see Detail E634-02.

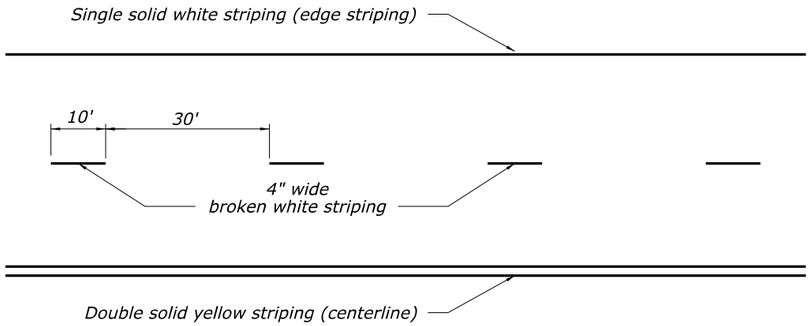


**BROKEN SINGLE WHITE AND
DOUBLE SOLID YELLOW STRIPING**

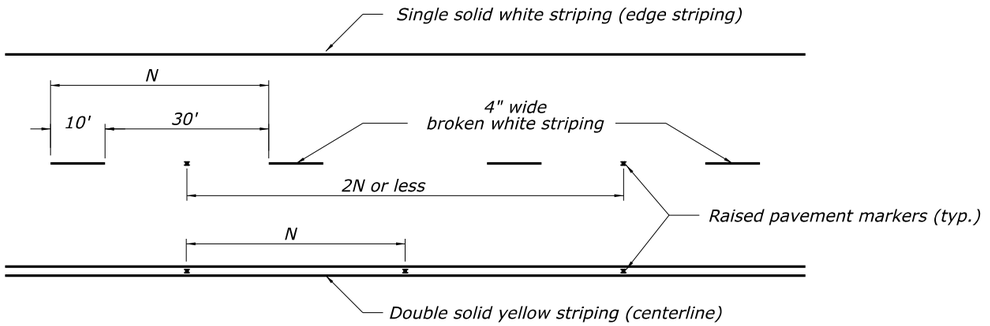


**BROKEN SINGLE WHITE AND
DOUBLE SOLID YELLOW STRIPING
WITH RAISED PAVEMENT MARKERS**

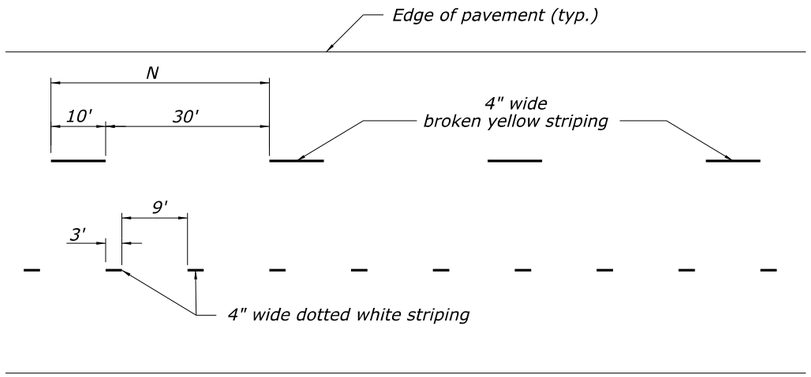


**BROKEN SINGLE YELLOW AND
DOTTED WHITE STRIPING**

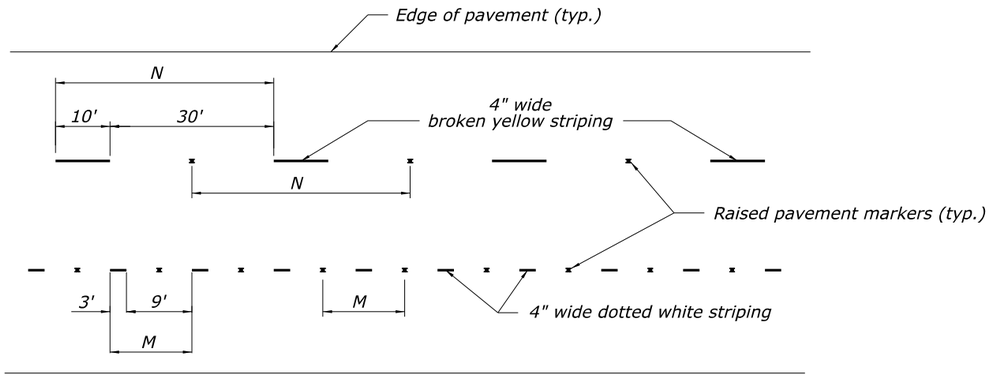


**BROKEN SINGLE YELLOW AND
DOTTED WHITE STRIPING
WITH RAISED PAVEMENT MARKERS**

*NO SCALE*

U.S. DEPARTMENT OF TRANSPORTATION, FHWA
OFFICE OF FEDERAL LANDS HIGHWAY

# PAVEMENT MARKINGS WITH AND WITHOUT RAISED PAVEMENT MARKERS

| EFLHD DETAIL | SPECIFICATION | APPROVED FOR USE |
|---|---|---|
| E634-03 | FP-24, FP-14 | 06/2024 |

M:\PROJECTS\gwmp\11(4)\Proj_Dev\CADD\AMC Arch\Std-Det\E634-03.dgn [Sheet]
21 May 2026 2:33 PM

| PROJECT | SHEET NUMBER |
|---|---|
| DC NP GWMP ARCH TAR 2026 | S11 |

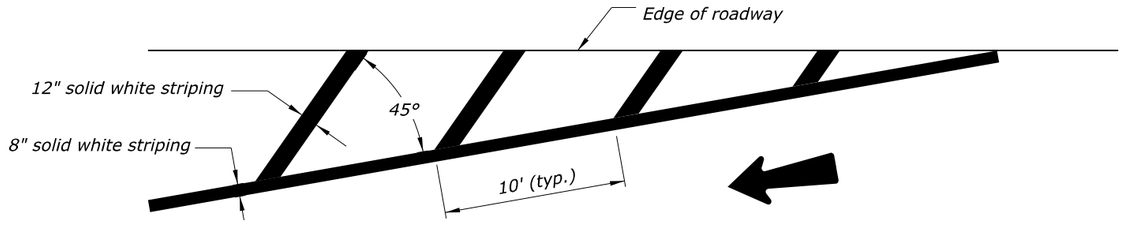


## ONE-WAY TRAFFIC, LANE SHIFT

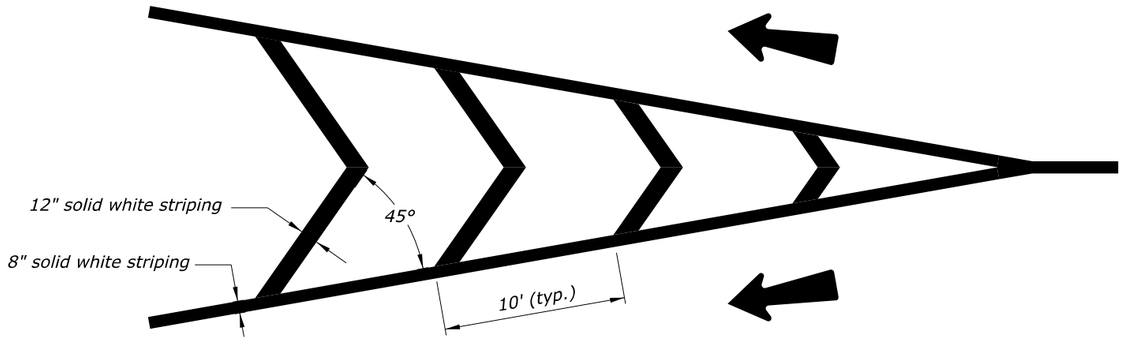


## ONE-WAY TWO-LANE TRAFFIC, LANES SEPARATE

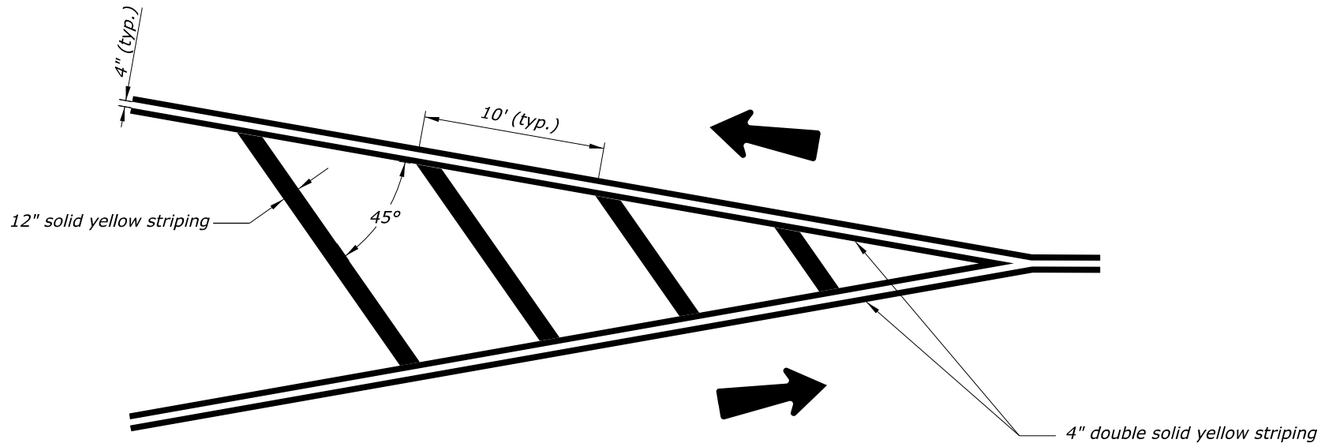


## TWO-WAY TWO-LANE TRAFFIC, LANES SEPARATE

NO SCALE

### NOTES:

1. Install striping in accordance with the "Manual on Uniform Traffic Control Devices" (MUTCD), latest edition.
2. Typical pavement marking widths are shown. Use wider pavement markings when specified in the plans or as directed.

U.S. DEPARTMENT OF TRANSPORTATION, FHWA
OFFICE OF FEDERAL LANDS HIGHWAY

# PAVEMENT MARKINGS IN NEUTRAL AREAS

| EFLHD DETAIL | SPECIFICATION | APPROVED FOR USE |
|---|---|---|
| E634-04 | FP-24, FP-14 | 06/2024 |

M:\PROJECTS\gwmp\11(4)\Proj_Dev\CADD\AMC Arch\Std-Det\E634-04.dgn [Sheet1_without_RPM]
21 May 2026 2:34 PM

| PROJECT | SHEET NUMBER |
|---|---|
| DC NP GWMP ARCH TAR 2026 | S12 |

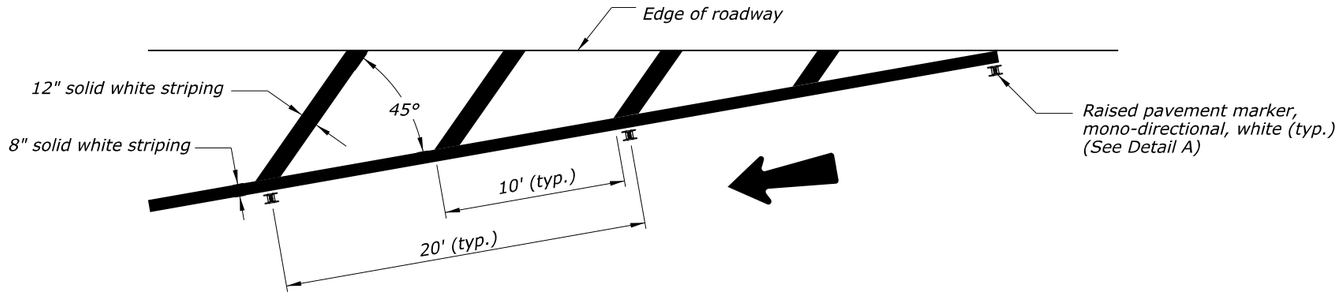


**ONE-WAY TRAFFIC, LANE SHIFT**

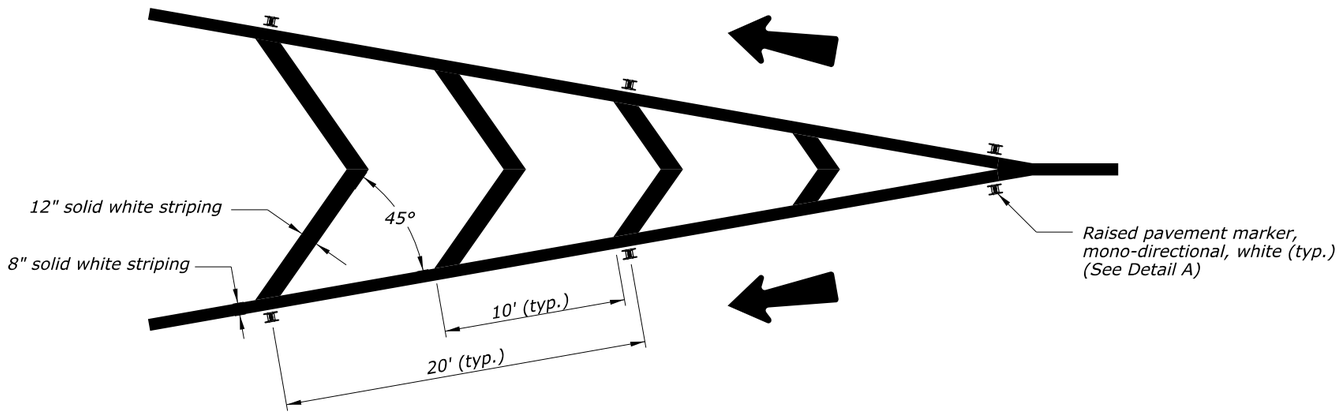


**ONE-WAY TWO-LANE TRAFFIC, LANES SEPARATE**

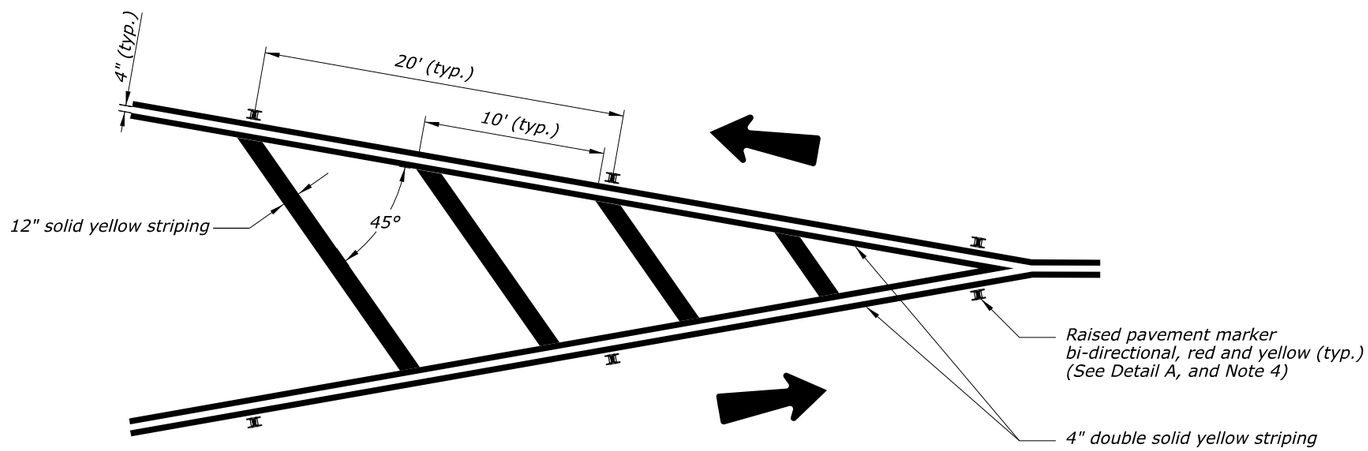


**TWO-WAY TWO-LANE TRAFFIC, LANES SEPARATE**

## NOTES:

1. *Install striping in accordance with the "Manual on Uniform Traffic Control Devices" (MUTCD), latest edition.*
2. *Typical pavement marking widths are shown. Use wider pavement markings when specified in the plans or as directed.*
3. *Space and install raised pavement markers (RPMs) in accordance with the MUTCD, latest edition, and as shown or as directed.*
4. *Detail A shows plowable RPM only; the same positioning applies to non-plowable RPMs. See Detail E634-02 for RPM details.*
5. *Install bi-directional RPMs so that the yellow reflective side is facing the traffic flow and the red reflective side is facing the opposing traffic.*

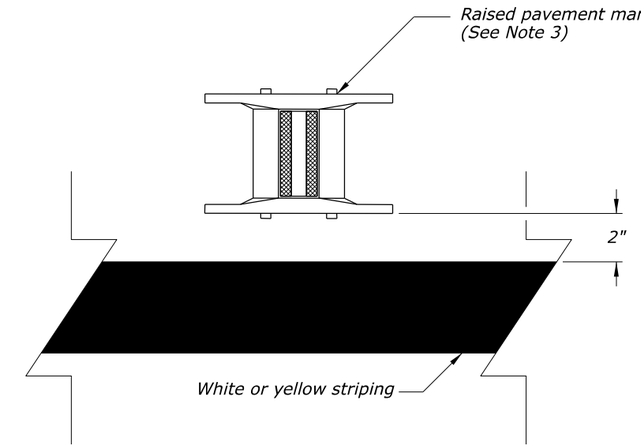


**DETAIL A**

NO SCALE

U.S. DEPARTMENT OF TRANSPORTATION, FHWA
OFFICE OF FEDERAL LANDS HIGHWAY

# PAVEMENT MARKINGS IN NEUTRAL AREAS WITH RAISED PAVEMENT MARKERS

| EFLHD DETAIL |
|---|
| E634-04 |
| SPECIFICATION |
| FP-24, FP-14 |
| APPROVED FOR USE |
| 06/2024 |

M:\PROJECTS\gwmp\11(4)\Proj_Dev\CADD\AMC Arch\Std-Det\E634-04.dgn [Sheet2_with_RPM]
21 May 2026 2:34 PM

| PROJECT | SHEET NUMBER |
|---|---|
| DC NP GWMP ARCH TAR 2026 | S13 |

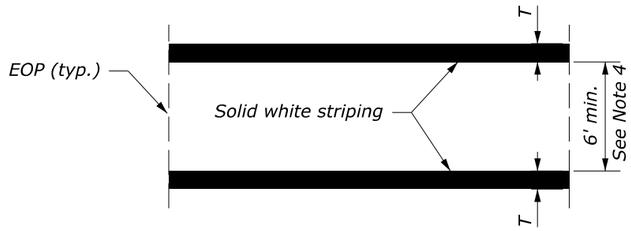


TRANSVERSE

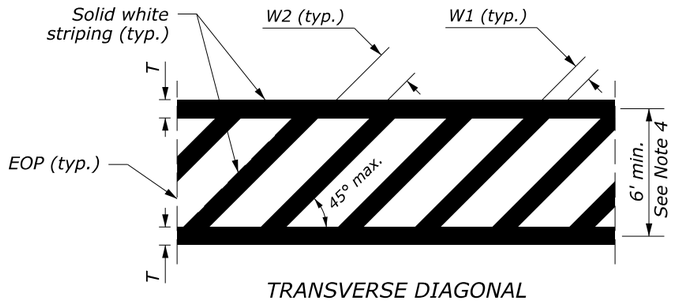


TRANSVERSE DIAGONAL
See Note 3

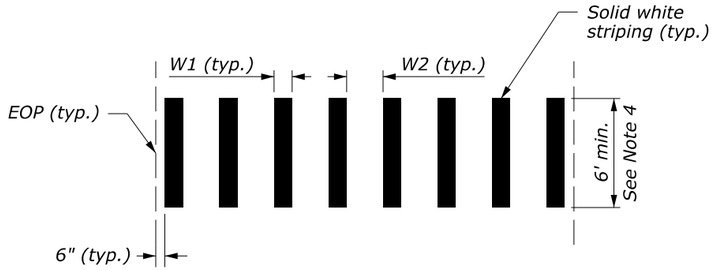


LONGITUDINAL BAR

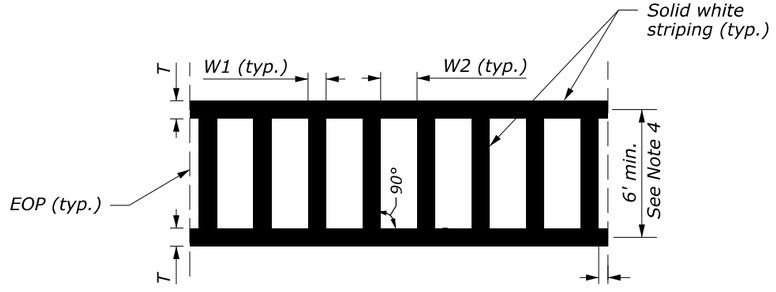


LADDER

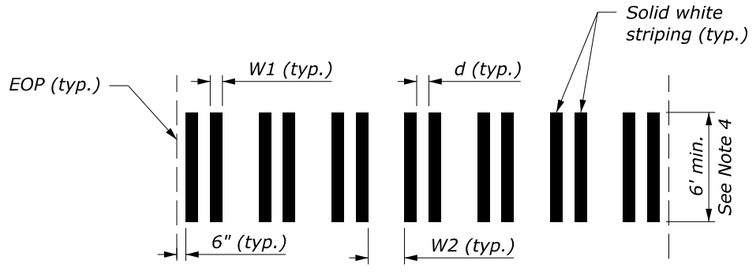


BAR PAIR

## TYPICAL CROSSWALK LAYOUTS

### NOTES:

1. Install striping and signing in accordance with the "Manual on Uniform Traffic Control Devices" (MUTCD), latest edition.
2. For longitudinal bar, bar pair, and ladder crosswalk layouts, space line bars to avoid wheel path as shown in the plans or as approved.
3. Use transverse diagonal crosswalk layout only at locations with complex roadway geometry where rotated interior longitudinal bars are needed to remain parallel to approaching traffic.
4. At non-intersection crosswalk where the posted speed limit is 40 MPH or greater, provide a minimum crosswalk width of 8 feet unless otherwise specified in the plans.

**CROSSWALK STRIPING DIMENSIONS TABLE**

| CROSSWALK TYPE | W1 | | W2* | | T | | d | |
|---|---|---|---|---|---|---|---|---|
| | Min. | Max. | Min. | Max. | Min. | Max. | Min. | Max. |
| Transverse | | | | | 6" | 24" | | |
| Longitudinal Bar | 12" | 24" | 12" | 60" | | | | |
| Longitudinal Bar Pair | 8" | 12" | 24" | 60" | | | 8" | 12" |
| Ladder | | 24" | | 24" | 6" | 24" | | |
| Transverse Diagonal | 12" | 24" | 12" | 60" | 6" | 24" | | |

NO SCALE

U.S. DEPARTMENT OF TRANSPORTATION, FHWA
OFFICE OF FEDERAL LANDS HIGHWAY

**PAVEMENT MARKINGS**
**PEDESTRIAN CROSSWALK**
SHEET 1 of 2

EFLHD DETAIL
E634-06A

SPECIFICATION
FP-24, FP-14

APPROVED FOR USE
06/2024

M:\PROJECTS\gwmp\11(4)\Proj_Dev\CADD\AMC Arch\Std-Det\E634-06.dgn [Sheet 1]
21 May 2026 2:34 PM

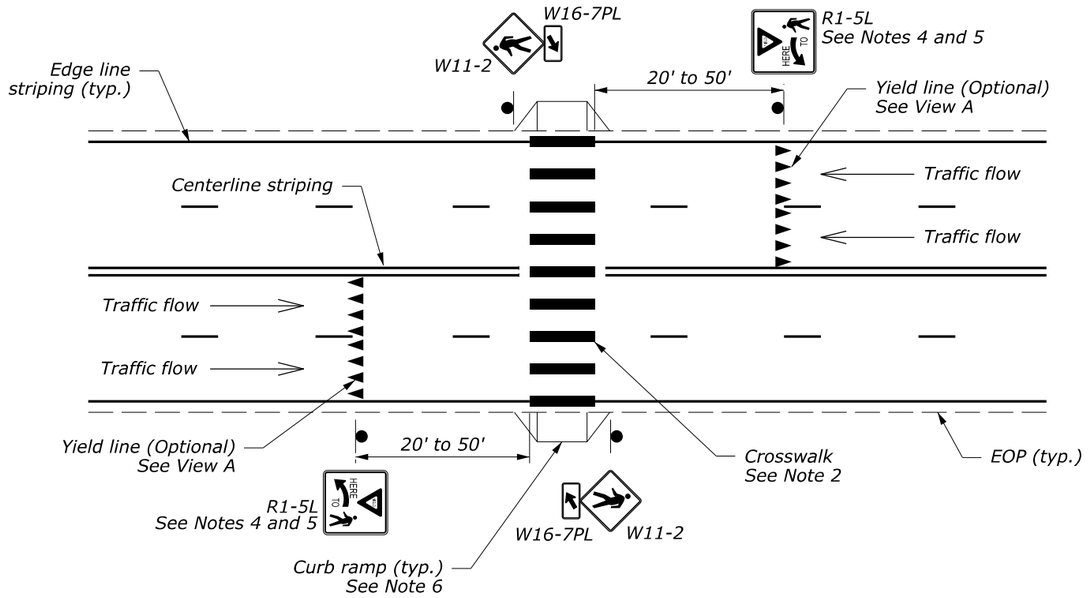


TWO-WAY ROADWAY

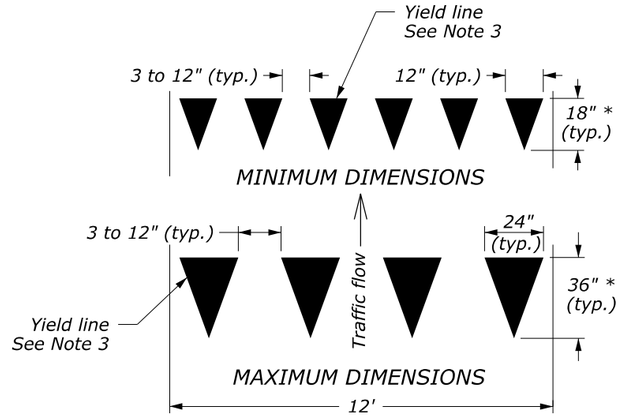


## VIEW A - YIELD LINE LAYOUTS

* Ensure triangle height for yield lines is equal to 1.5 times the base dimension.

## NOTES:

1. Install striping and signing in accordance with the "Manual on Uniform Traffic Control Devices" (MUTCD), latest edition.
2. Longitudinal bar crosswalk layout is used for illustration purposes only. Refer to the plans for project crosswalk layout and actual striping dimensions. See Sheet 1 of 2 for typical crosswalk layouts.
3. Smaller than shown yield lines may be used when installed on narrower, slow-speed facilities as approved.
4. If Stop Here for Pedestrians signs (R1-5b or R1-5c) are used instead of Yield Here to Pedestrians signs (R1-5 or R1-5a), use stop lines instead of yield lines.
5. The In-Street Pedestrian Crossing (R1-6 or R1-6a) sign may be used to remind road users of laws regulating right-of-way at an unsignalized pedestrian crosswalk according to the latest edition of the MUTCD as approved.
6. When curb ramps are present, ensure that crosswalk markings are located so that the curb ramps are within the extension of the crosswalk markings.

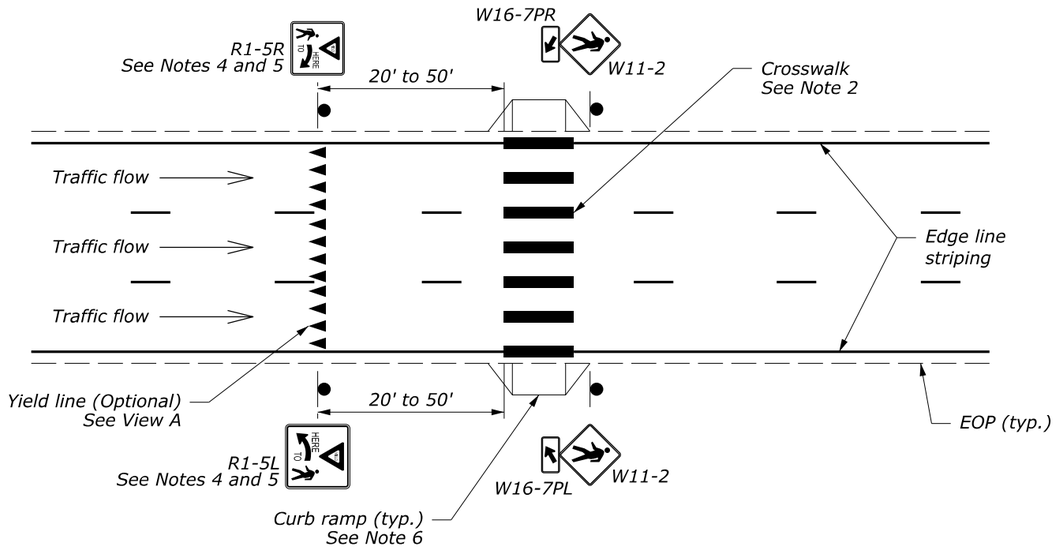


ONE-WAY ROADWAY

## HIGH-VISIBILITY CROSSWALK AT UNSIGNALIZED MIDBLOCK

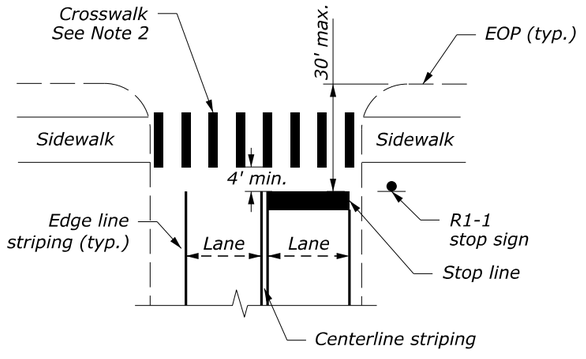


## STANDARD CROSSWALK AT INTERSECTION

NO SCALE

| U.S. DEPARTMENT OF TRANSPORTATION, FHWA OFFICE OF FEDERAL LANDS HIGHWAY | EFLHD DETAIL E634-06A |
|---|---|
| **PAVEMENT MARKINGS PEDESTRIAN CROSSWALK** SHEET 2 of 2 | SPECIFICATION FP-24, FP-14 |
| | APPROVED FOR USE 06/2024 |

M:\PROJECTS\gwmp\11(4)\Proj_Dev\CADD\AMC Arch\Std-Det\E634-06.dgn [Sheet 2]
21 May 2026 2:34 PM

| PROJECT | SHEET NUMBER |
|---|---|
| DC NP GWMP ARCH TAR 2026 | S15 |

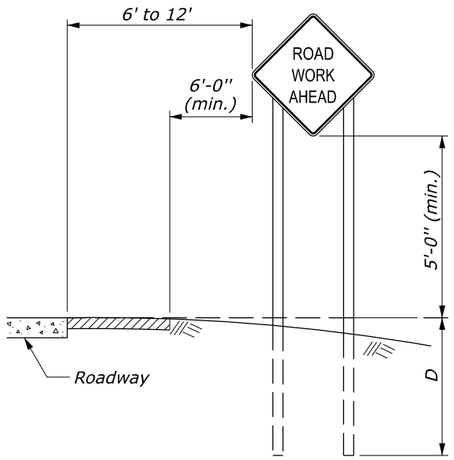


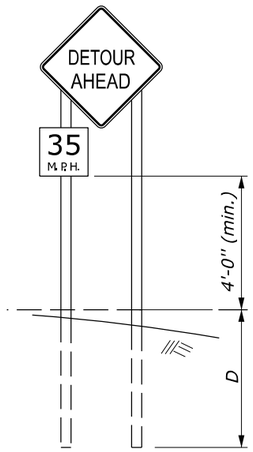


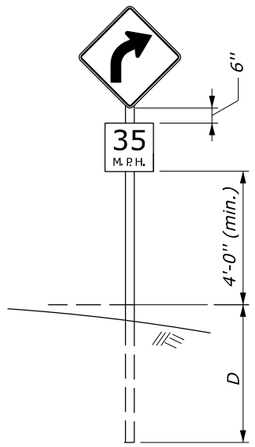


RURAL AREA

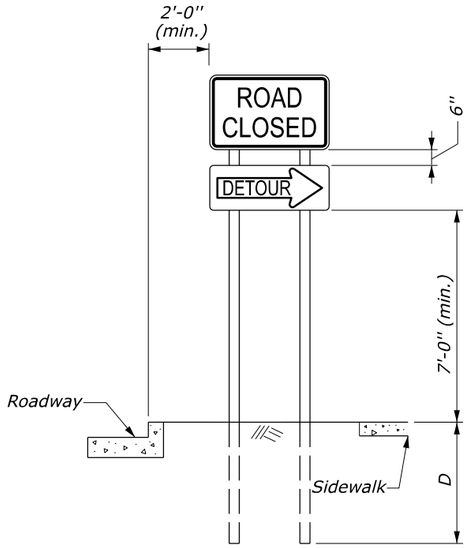


URBAN AREA

## FIXED ROADWAY SIGNS

*NOTES:*

1. *Mount signs that are wider than 3 feet or larger than 10 square feet on double posts.*
2. *All lumber dimensions are nominal.*
3. *Submit alternate details for portable signs. Ensure sign mounts hold the sign face in a vertical plane. Portable signs may be mounted lower than fixed signs when approved. Ensure all portable sign supports are crashworthy.*
4. *When parking is permitted within 200 feet of the sign, mount the sign a minimum of 7 feet above the pavement surface.*
5. *When approved by the CO and the Utility Company, utility poles may be used for sign mounting.*
6. *For 4- by 6-inch and greater posts, see the Breakaway Sign Support View. If breakaway design cannot be used due to post spacing, place the sign outside the clearzone or shield with a barrier. Do not place holes in posts of non-breakaway signs.*
7. *Signs requiring 6- by 6-inch and greater posts are considered non-breakaway if multiple posts are required and the posts cannot be spaced a minimum of 7 feet apart.*

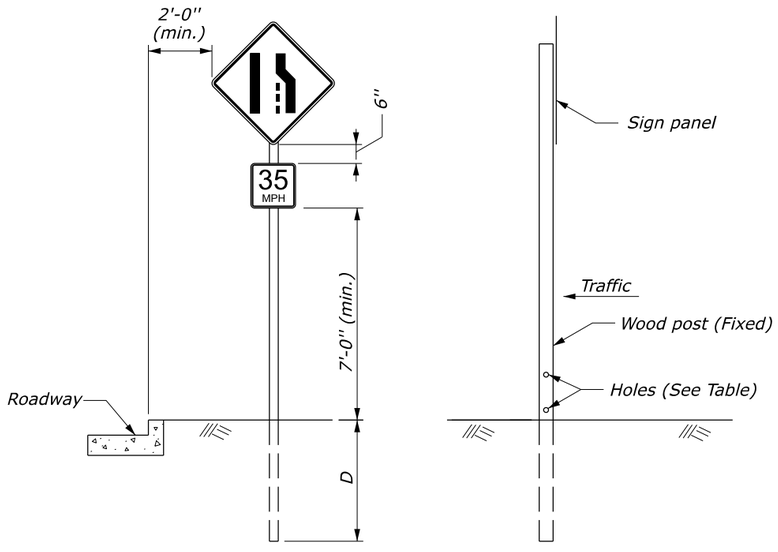


BREAKAWAY SIGN SUPPORT
(FIXED SIGNS 4" X 6" AND GREATER POSTS)
See Notes 6 and 7

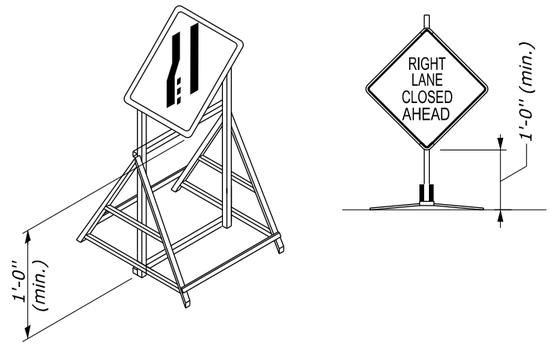


**PORTABLE SIGNS**
See Notes 3 and 4

| POST SIZE TABLE | | | | | | |
|---|---|---|---|---|---|---|
| POST SIZE | D | HOLE DIAMETER | MAXIMUM SIGN AREA (SQFT) | | | |
| | | | 1 Post | 2 Post | 3 Post | 4 Post |
| 4" x 4" | 4' | None Required | 10 | 20 | X | X |
| 4" x 6" | 4' | 1.5" | X | 35 | 50 | 70 |
| 6" x 6" | 5' | 2" | X | 50 | 75 | 100 |
| 6" x 8" | 5' | 3" | X | 85 | 125 | 165 |

NO SCALE

U.S. DEPARTMENT OF TRANSPORTATION, FHWA
OFFICE OF FEDERAL LANDS HIGHWAY

**TEMPORARY TRAFFIC CONTROL SIGN MOUNTING**

EFLHD DETAIL
E635-01

SPECIFICATION
FP-24, FP-14

APPROVED FOR USE
06/2024

M:\PROJECTS\gwmp\11(4)\Proj_Dev\CADD\AMC Arch\Std-Det\E635-01.dgn [Sheet]
21 May 2026 2:34 PM

# TYPICAL APPLICATION: ONE WAY, TWO LANE ROADWAY, CLOSING ONE LANE

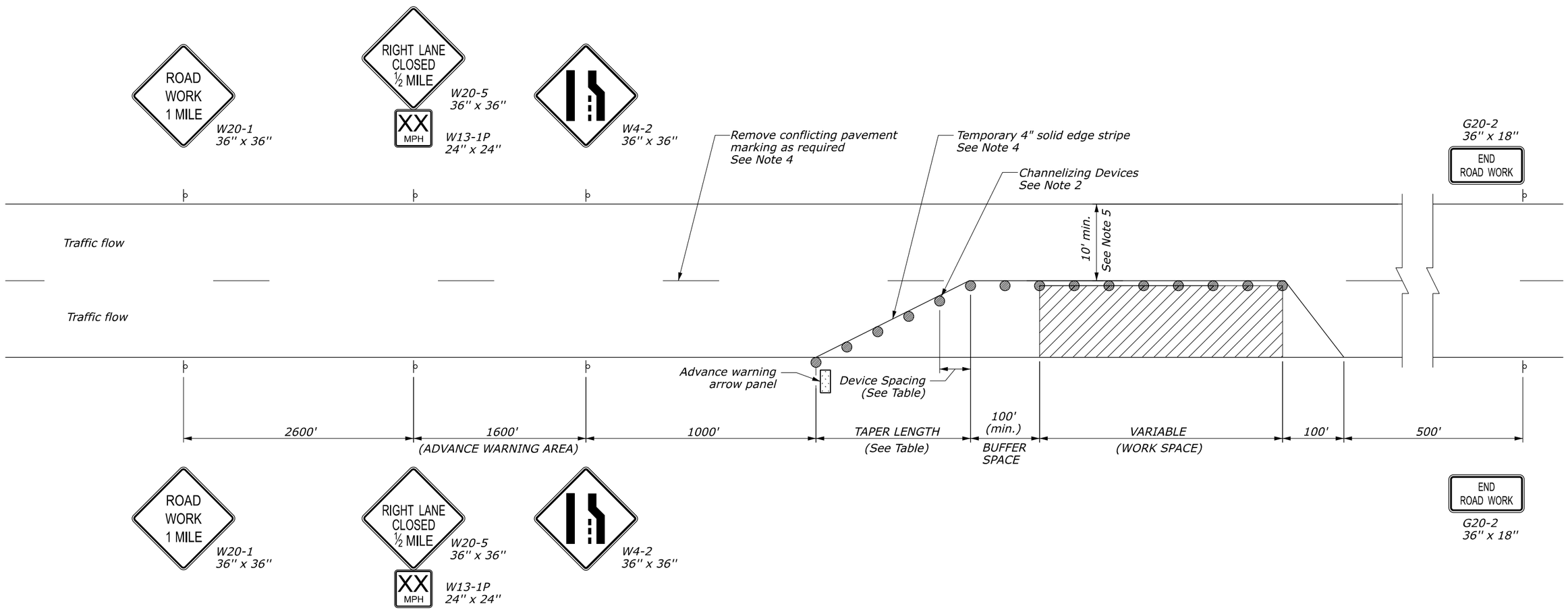


## NOTES:

1. Final location and spacing of temporary traffic control devices may be changed to fit field conditions as approved.
2. For operations that require a lane closure for a day or less, drums may be substituted with cones, type A in the work area as approved.
3. Right lane closure is shown. For left lane closure, substitute W20-5 and W4-2 left lane closure signs.
4. For long-term operations (operations where the lane is continuously closed for more than three days) remove conflicting pavement markings and place edge stripe as shown.
5. Use minimum width shown unless otherwise specified in Section 156.

## LENGTH AND SPACING TABLE

| APPROACH SPEED (MPH) | MINIMUM TAPER LENGTH (LNFT) LANE WIDTH (LNFT) | | | CHANNELIZING DEVICE SPACING (LNFT) | |
|---|---|---|---|---|---|
| | 10 | 11 | 12 | TAPER AREA | WORK AREA |
| 25 | 105 | 115 | 125 | 25 | 50 |
| 30 | 150 | 165 | 180 | 30 | 60 |
| 35 | 205 | 225 | 245 | 35 | 70 |
| 40 | 270 | 295 | 320 | 40 | 80 |
| 45 | 450 | 495 | 540 | 45 | 90 |
| 50 | 500 | 550 | 600 | 50 | 100 |
| 55 | 550 | 605 | 660 | 55 | 100 |

* Approach speed based on the regulatory posted speed, not the advisory speed.

NO SCALE

U.S. DEPARTMENT OF TRANSPORTATION, FHWA
OFFICE OF FEDERAL LANDS HIGHWAY

**TEMPORARY TRAFFIC CONTROL SINGLE LANE CLOSURE LAYOUT**

| EFLHD DETAIL | SPECIFICATION | APPROVED FOR USE |
|---|---|---|
| E635-05 | FP-24, FP-14 | 06/2024 |

M:\PROJECTS\gwmp\111(4)\Proj_Dev\CADD\AMC Arch\Std-Det\E635-05.dgn [Sheet]
21 May 2026 2:34 PM

| PROJECT | SHEET NUMBER |
|---|---|
| DC NP GWMP ARCH TAR 2026 | S17 |

*NOTES:*

1. *Mount all new steel traffic signal poles on a transformer. See Detail E636-D for transformer base details.*
2. *Use stainless steel strapping to affix hardware to poles, unless otherwise specified.*

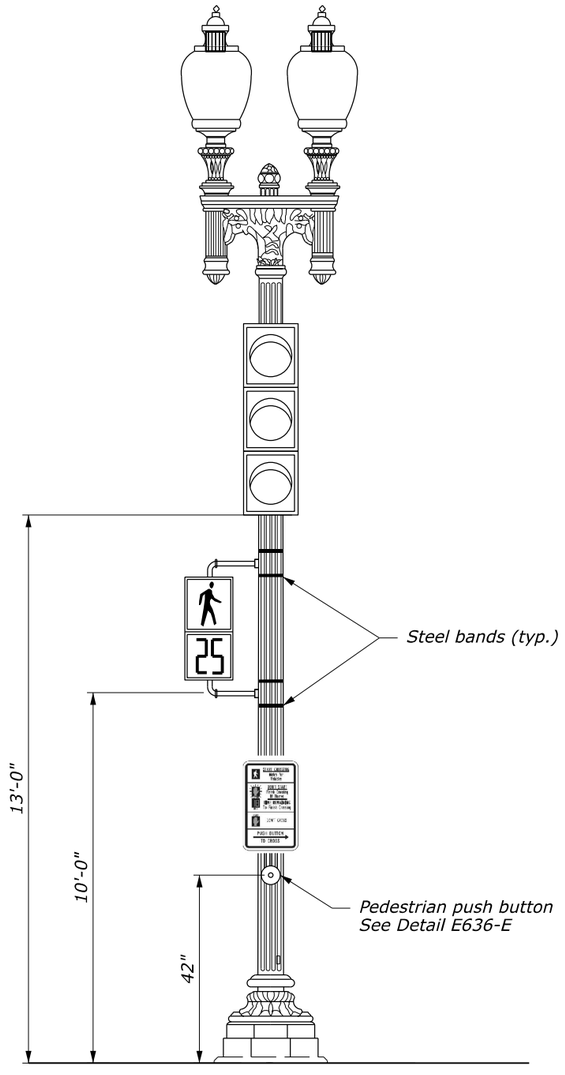


***TWIN 20 STYLE LIGHTING STANDARD WITH LED RETROFIT UPGRADE***

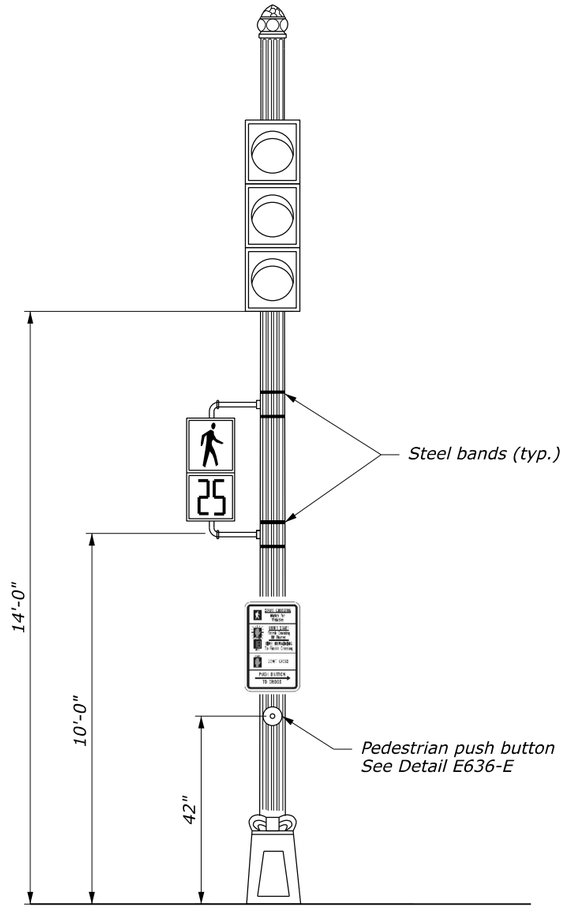


***20 FOOT TALL STEEL TRAFFIC SIGNAL POLE***

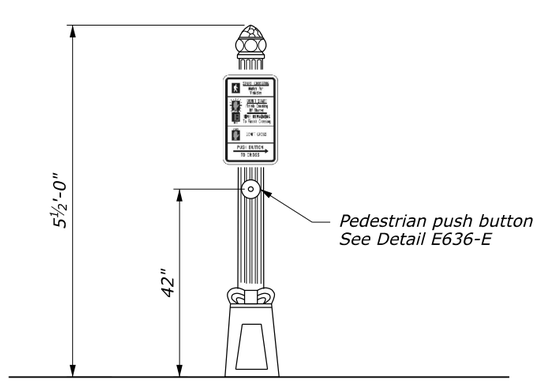


***STEEL PEDESTAL POLE***

*NO SCALE*

| U.S. DEPARTMENT OF TRANSPORTATION, FHWA<br>OFFICE OF FEDERAL LANDS HIGHWAY | EFLHD DETAIL<br>E636-A |
|---|---|
| **TRAFFIC SIGNAL HARDWARE ARRANGEMENT ON METAL POLES** | SPECIFICATION<br>FP-24 |
| | APPROVED FOR USE |

M:\PROJECTS\gwmp\11(4)\Proj_Dev\CADD\AMC Arch\Std-Det\S28-34-det E636_C.dgn [E636-A]
21 May 2026 2:38 PM

| PROJECT | SHEET NUMBER |
|---|---|
| DC NP GWMP ARCH TAR 2026 | S18 |

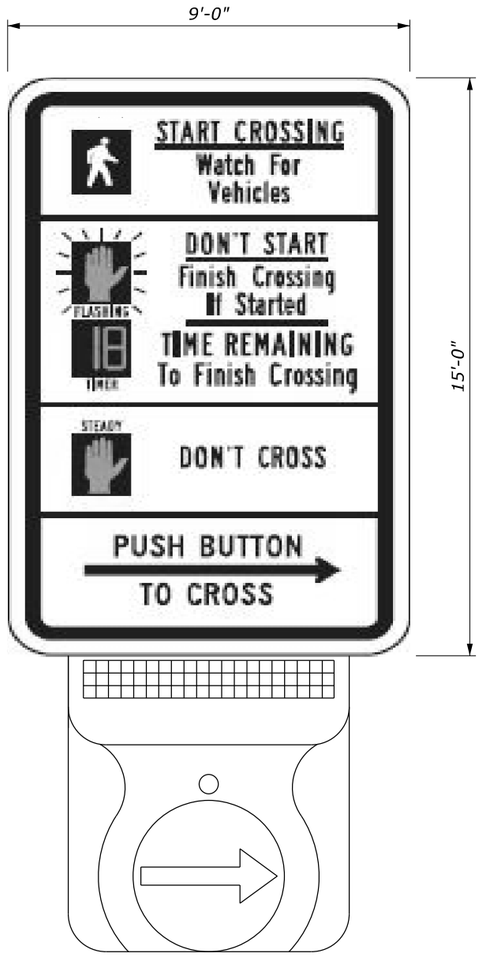


***FRONT VIEW***

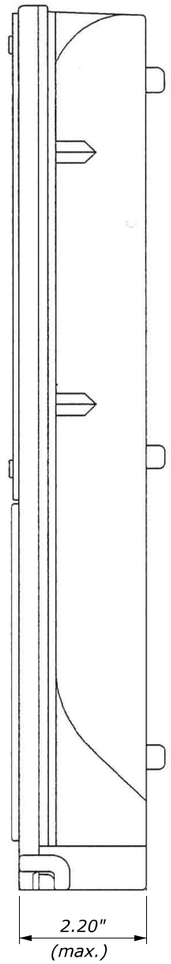


***SIDE VIEW***

*NO SCALE*

| U.S. DEPARTMENT OF TRANSPORTATION, FHWA<br>OFFICE OF FEDERAL LANDS HIGHWAY | EFLHD DETAIL<br>E636-B |
|---|---|
| **PEDESTRIAN PUSH BUTTON** | SPECIFICATION<br>FP-24 |
| | APPROVED FOR USE |

M:\PROJECTS\gwmp\11(4)\Proj_Dev\CADD\AMC Arch\Std-Det\S28-34-det E636_C.dgn [E636-B]
21 May 2026 2:38 PM

| PROJECT | SHEET NUMBER |
|---|---|
| DC NP GWMP ARCH TAR 2026 | S19 |

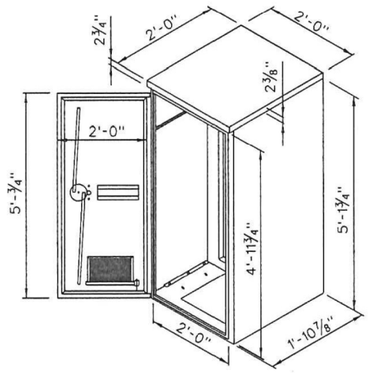


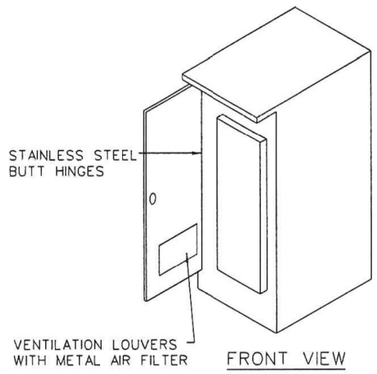


FRONT VIEW

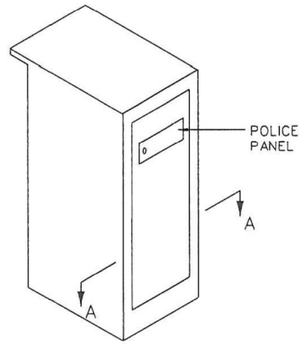


REAR VIEW

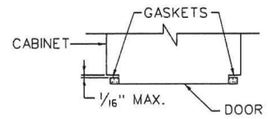


SECTION A-A

MODEL 336SS CONTROLLER CABINET

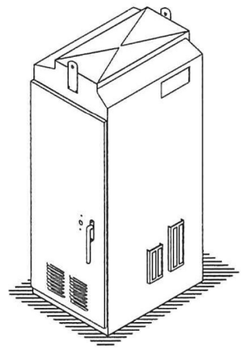

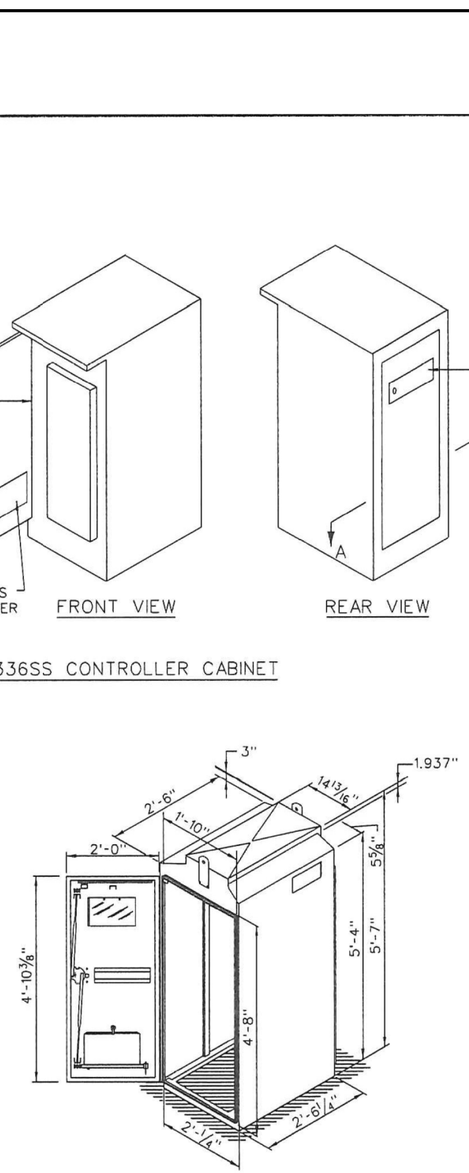


MODEL 332 CONTROLLER CABINET DETAILS

NOTE:

DO NOT PLACE CABINETS IN SIDEWALK.

*Adopted from District of Columbia Department of Transporation Standard Drawings, August 2015, DWG. NO. 613.10*

| ISSUED: 8/2015 | |
|---|---|
| REVISION | APPROVAL |
| | |
| | |
| | |
| | |
| | |

RECOMMENDED: _____ PROJECT MANAGER

APPROVED: Muhammed Khalid CHIEF ENGINEER

# TRAFFIC SIGNAL CONTROLLER CABINET DETAILS

d. DISTRICT OF COLUMBIA DEPARTMENT OF TRANSPORTATION

DWG. NO. 613.10

*NO SCALE*

U.S. DEPARTMENT OF TRANSPORTATION, FHWA
OFFICE OF FEDERAL LANDS HIGHWAY

**TRAFFIC SIGNAL CONTROLLER CABINET DETAILS**

EFLHD DETAIL E636-C

SPECIFICATION FP-24

APPROVED FOR USE

M:\PROJECTS\gwmp\11(4)\Proj_Dev\CADD\AMC Arch\Std-Det\S28-34-det E636_C.dgn [E636-C]
21 May 2026 2:38 PM

| PROJECT | SHEET NUMBER |
|---|---|
| DC NP GWMP ARCH TAR 2026 | S20 |

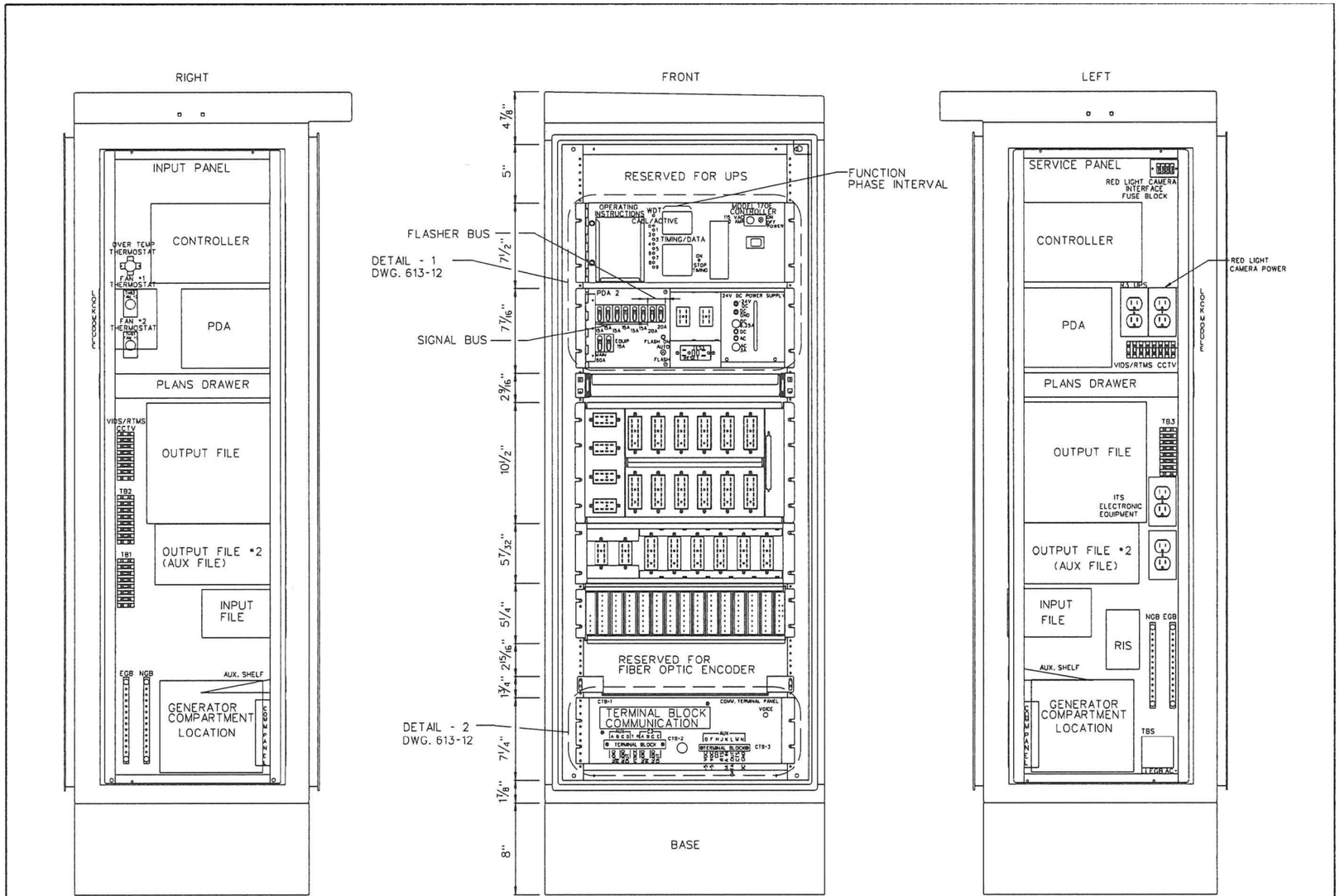


*Adopted from District of Columbia Department of Transporation Standard Drawings, August 2015, DWG. NO. 613.11*

| ISSUED: 8/2015 | |
|---|---|
| REVISION | APPROVAL |
| | |

RECOMMENDED: _____ PROJECT MANAGER

APPROVED: Muhammed Khalid CHIEF ENGINEER

# 336SS TRAFFIC SIGNAL CABINET FRONT, LEFT, AND RIGHT VIEWS

d. DISTRICT OF COLUMBIA DEPARTMENT OF TRANSPORTATION

DWG. NO. 613.11

*NO SCALE*

U.S. DEPARTMENT OF TRANSPORTATION, FHWA
OFFICE OF FEDERAL LANDS HIGHWAY

**336SS TRAFFIC SIGNAL CABINET FRONT, LEFT, AND RIGHT VIEWS**

| EFLHD DETAIL |
|---|
| E636-D |
| SPECIFICATION |
| FP-24 |
| APPROVED FOR USE |

M:\PROJECTS\gwmp\11(4)\Prof_Dev\CADD\AMC Arch\Std-Det\S28-34-det E636_C.dgn [E636-D]
21 May 2026 2:38 PM

| PROJECT | SHEET NUMBER |
|---|---|
| DC NP GWMP ARCH TAR 2026 | S21 |

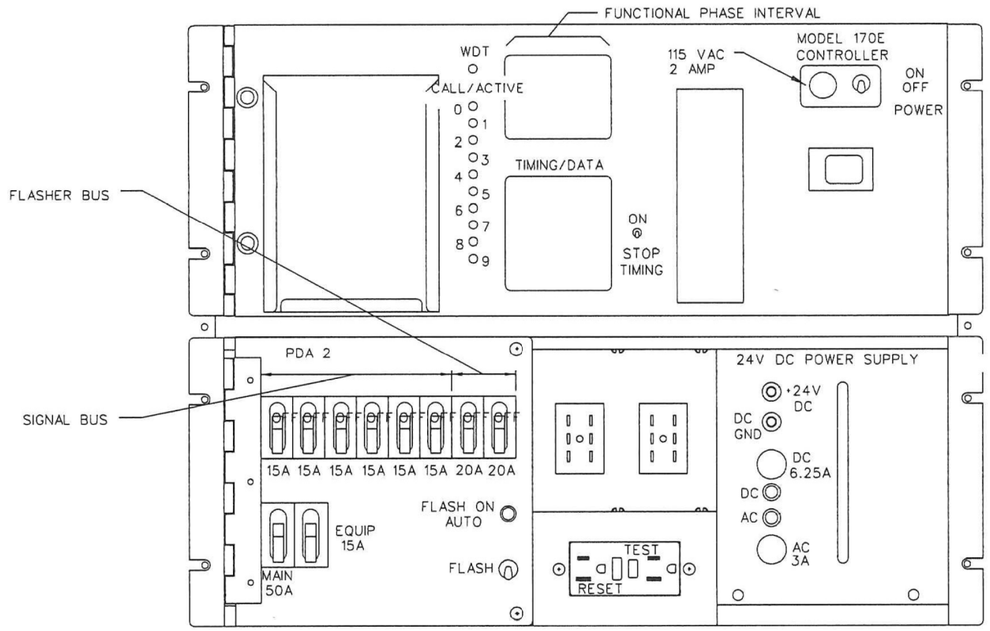


DETAIL - 1

DWG. 613.11

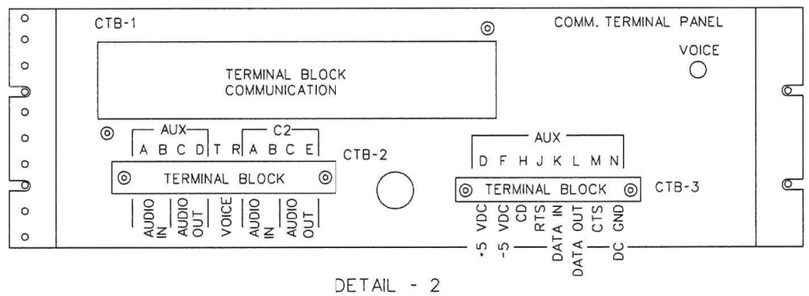


DETAIL - 2

DWG. 613.11

*Adopted from District of Columbia Department of Transporation Standard Drawings, August 2015, DWG. NO. 613.12*

| ISSUED: 8/2015 | |
|---|---|
| REVISION | APPROVAL |
| | |
| | |
| | |
| | |
| | |

RECOMMENDED: _____ PROJECT MANAGER

APPROVED: Muhammed Khalid CHIEF ENGINEER

# 336SS TRAFFIC SIGNAL CABINET DETAILS

DISTRICT OF COLUMBIA
DEPARTMENT OF TRANSPORTATION

DWG. NO. 613.12

*NO SCALE*

U.S. DEPARTMENT OF TRANSPORTATION, FHWA
OFFICE OF FEDERAL LANDS HIGHWAY

**336SS TRAFFIC SIGNAL CABINET DETAILS**

| EFLHD DETAIL |
|---|
| E636-E |
| SPECIFICATION FP-24 |
| APPROVED FOR USE |

M:\PROJECTS\gwmp\11(4)\Proj_Dev\CADD\AMC Arch\Std-Det\S28-34-det E636_C.dgn [E636-E]
21 May 2026 2:38 PM

| PROJECT | SHEET NUMBER |
|---|---|
| DC NP GWMP ARCH TAR 2026 | S22 |

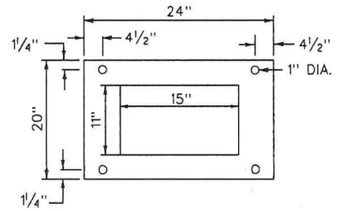


TOP VIEW

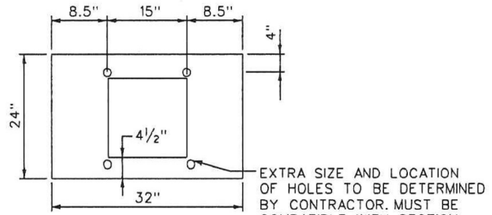


EXTRA SIZE AND LOCATION OF HOLES TO BE DETERMINED BY CONTRACTOR. MUST BE COMPATIBLE WITH SECTION D-D, DWG. NO. 613.11.

TOP VIEW

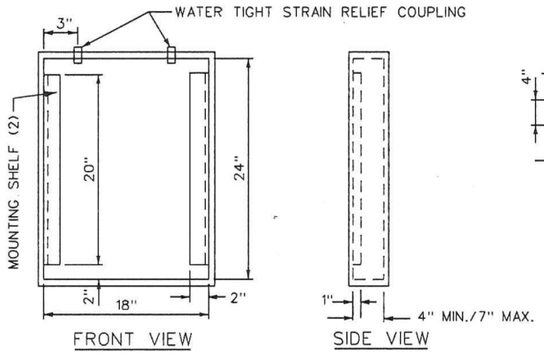


FRONT VIEW




SIDE VIEW

AERIAL TERMINATION CABINET

NOTES:

1. CABINET TYPE 3R ELECTRICAL ENCLOSURE.
2. THE SIZE OF THE WATER TIGHT STRAIN RELIEF COUPLINGS WILL BE SPECIFIED BY THE ENGINEER.
3. THE DOOR SHALL BE HINGED, AND LATCHED.
4. REAR OF THE CABINET SHALL HAVE TWO (2) WOOD POLE MOUNTING BRACKETS TO BE USED WITH METAL STRAPPING.
5. THE CABINET SHALL BE MADE OF ALUMINUM SHEET WITH A MIN. OF 0.125" THICKNESS.

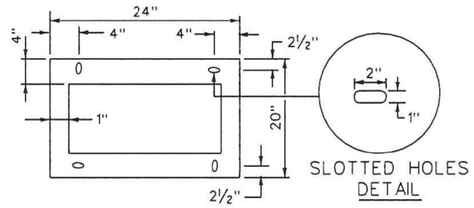


SLOTTED HOLES DETAIL

BOTTOM VIEW

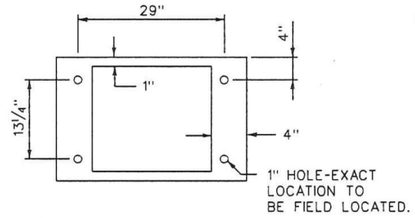


1" HOLE-EXACT LOCATION TO BE FIELD LOCATED.

BOTTOM VIEW

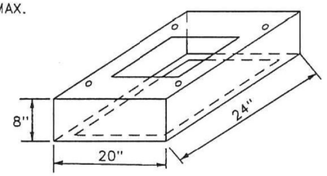


ADAPTOR BASE NO. 1

USE WITH STANDARD 336SS FOUNDATIONS

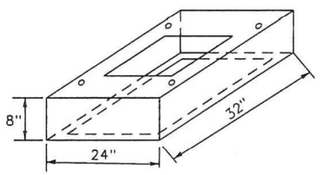


ADAPTOR BASE NO. 2

USE WITH FOUNDATIONS FOR 332 AND 336SS CABINETS ON EXISTING TYPE N FOUNDATIONS

CONTROLLER AND TERMINATION CABINET ADAPTOR BASES

NOTES:

1. WHEN ADAPTOR BASE NO. 2 IS USED FOR A TYPE 332 CABINET, NEW HOLES MUST BE DRILLED IN THE TOP PLATE. THE HOLES SHALL BE 29" APART ON THE LONG SIDE AND 13¼" APART ON THE SHORT SIDE (29"x13¼").
2. TYPE N FOUNDATIONS WILL NOT BE CONSTRUCTED.

*Adopted from District of Columbia Department of Transporation Standard Drawings, August 2015, DWG. NO. 613.13*

| ISSUED: 8/2015 | |
|---|---|
| REVISION | APPROVAL |
| | |
| | |
| | |
| | |
| | |

RECOMMENDED: _____ PROJECT MANAGER

APPROVED: Muhammed Khalid CHIEF ENGINEER

TRAFFIC SIGNAL AERIAL TERMINATION CABINETS AND CONTROLLER CABINET ADAPTER BASES

d. DISTRICT OF COLUMBIA DEPARTMENT OF TRANSPORTATION

DWG. NO. 613.13

*NO SCALE*

U.S. DEPARTMENT OF TRANSPORTATION, FHWA
OFFICE OF FEDERAL LANDS HIGHWAY

**TRAFFIC SIGNAL AERIAL TERMINATION CABINETS AND CONTROLLER CABINET ADAPTER BASES**

| EFLHD DETAIL |
|---|
| E636-F |
| SPECIFICATION |
| FP-24 |
| APPROVED FOR USE |

M:\PROJECTS\gwmp\11(4)\Proj_Dev\CADD\AMC Arch\Std-Det\S28-34-det E636_C.dgn [E636-F]
21 May 2026 2:38 PM

| PROJECT | SHEET NUMBER |
|---|---|
| DC NP GWMP ARCH TAR 2026 | S23 |

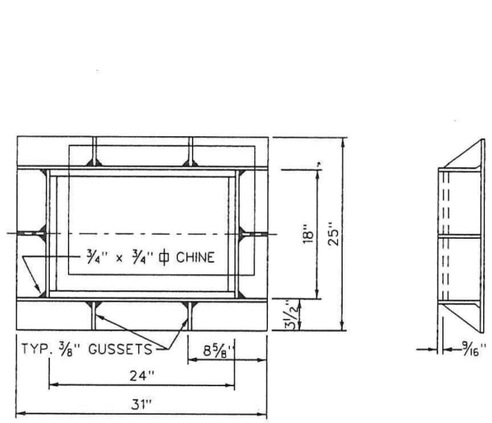


FRAME AND COVER

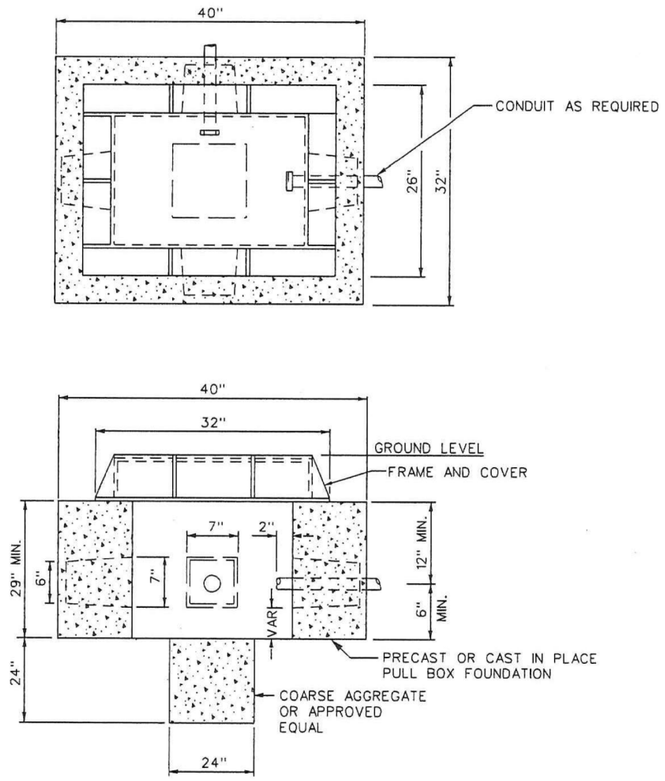


PULL BOX INSTALLATION

NOTES:

1. PULL BOX AND HANDBOX CONCRETE TO SATISFY D.C. SPECIFICATION 803.01 (3500 PSI).
2. SEE DWG. NO. 613.14 : GROUND ROD MAY BE REQUIRED IF MAST ARM POLE FOUNDATION IS CONNECTED TO THE PULL BOX.

*Adopted from District of Columbia Department of Transporation Standard Drawings, August 2015, DWG. NO. 613.20*

| ISSUED: 8/2015 | RECOMMENDED: PROJECT MANAGER |
|---|---|
| REVISION / APPROVAL | APPROVED: Muhammed Khalid, CHIEF ENGINEER |

# TRAFFIC SIGNAL DISTRICT PULL BOX DETAILS

d. DISTRICT OF COLUMBIA DEPARTMENT OF TRANSPORTATION

DWG. NO. 613.20

*NO SCALE*

U.S. DEPARTMENT OF TRANSPORTATION, FHWA
OFFICE OF FEDERAL LANDS HIGHWAY

**TRAFFIC SIGNAL DISTRICT PULL BOX DETAILS**

| EFLHD DETAIL | E636-G |
|---|---|
| SPECIFICATION | FP-24 |
| APPROVED FOR USE | |

M:\PROJECTS\gwmp\11(4)\Proj_Dev\CADD\AMC Arch\Std-Det\S23-34-det E636_C.dgn [E636-G]
21 May 2026 2:38 PM

MAY 7, 2026

# TRIUMPHAL ARCH - WASHINGTON, DC

RENDERING

HARRISON DESIGN

MAY 7, 2026

# TRIUMPHAL ARCH - WASHINGTON, DC

RENDERING

HARRISON DESIGN

MAY 7, 2026

# TRIUMPHAL ARCH - WASHINGTON, DC

VIEW FROM ARLINGTON HOUSE - BEFORE

HARRISON DESIGN

MAY 7, 2026

# TRIUMPHAL ARCH - WASHINGTON, DC

VIEW FROM ARLINGTON HOUSE - AFTER

HARRISON DESIGN

MAY 7, 2026

# TRIUMPHAL ARCH - WASHINGTON, DC

VIEW FROM HEMICYCLE - BEFORE

HARRISON DESIGN

MAY 7, 2026

# TRIUMPHAL ARCH - WASHINGTON, DC

VIEW FROM HEMICYCLE - AFTER

HARRISON DESIGN

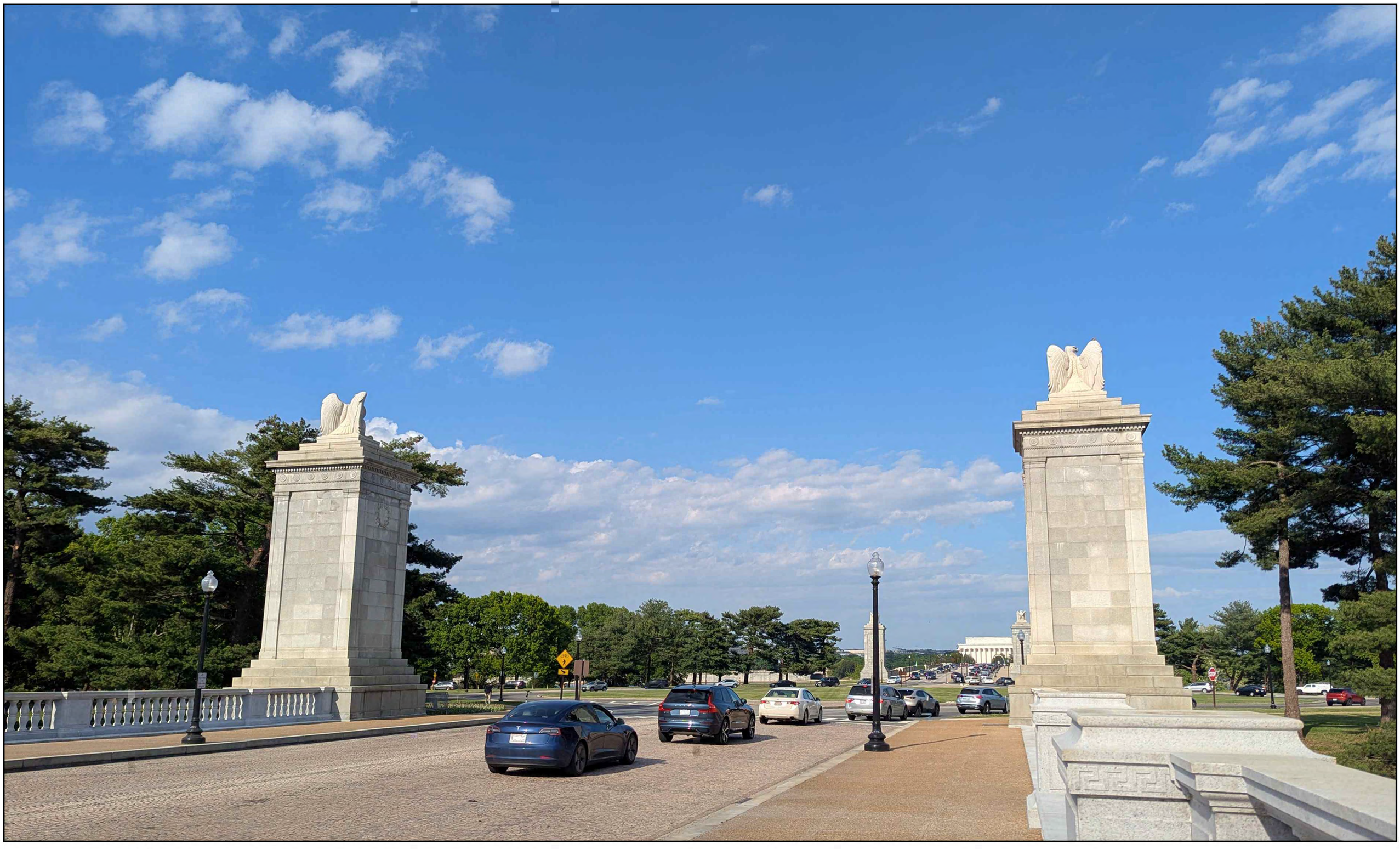

MAY 7, 2026

# TRIUMPHAL ARCH - WASHINGTON, DC

VIEW FROM ARLINGTON BRIDGE - BEFORE

HARRISON DESIGN

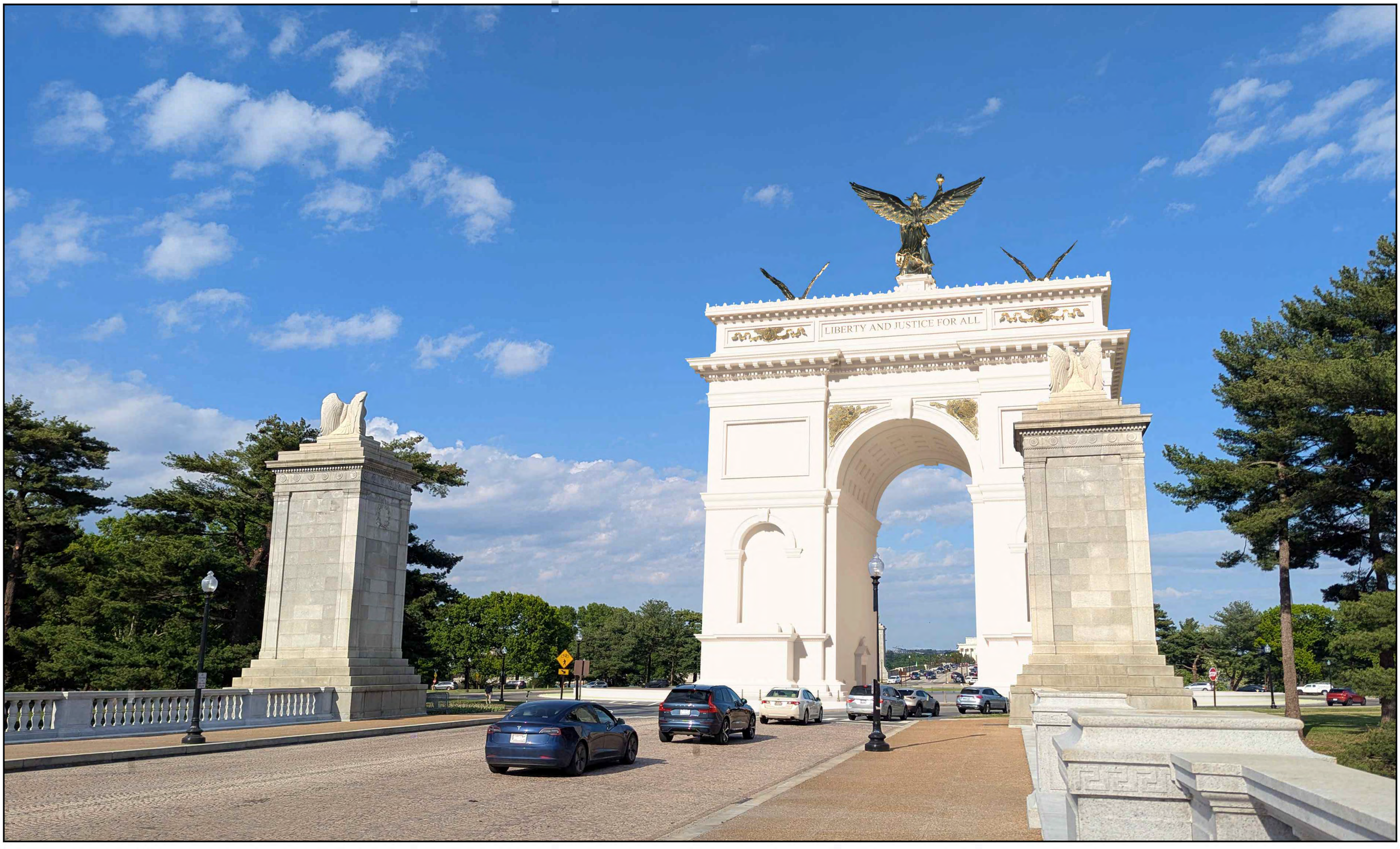


MAY 7, 2026

# TRIUMPHAL ARCH - WASHINGTON, DC

VIEW FROM ARLINGTON BRIDGE - AFTER

HARRISON DESIGN

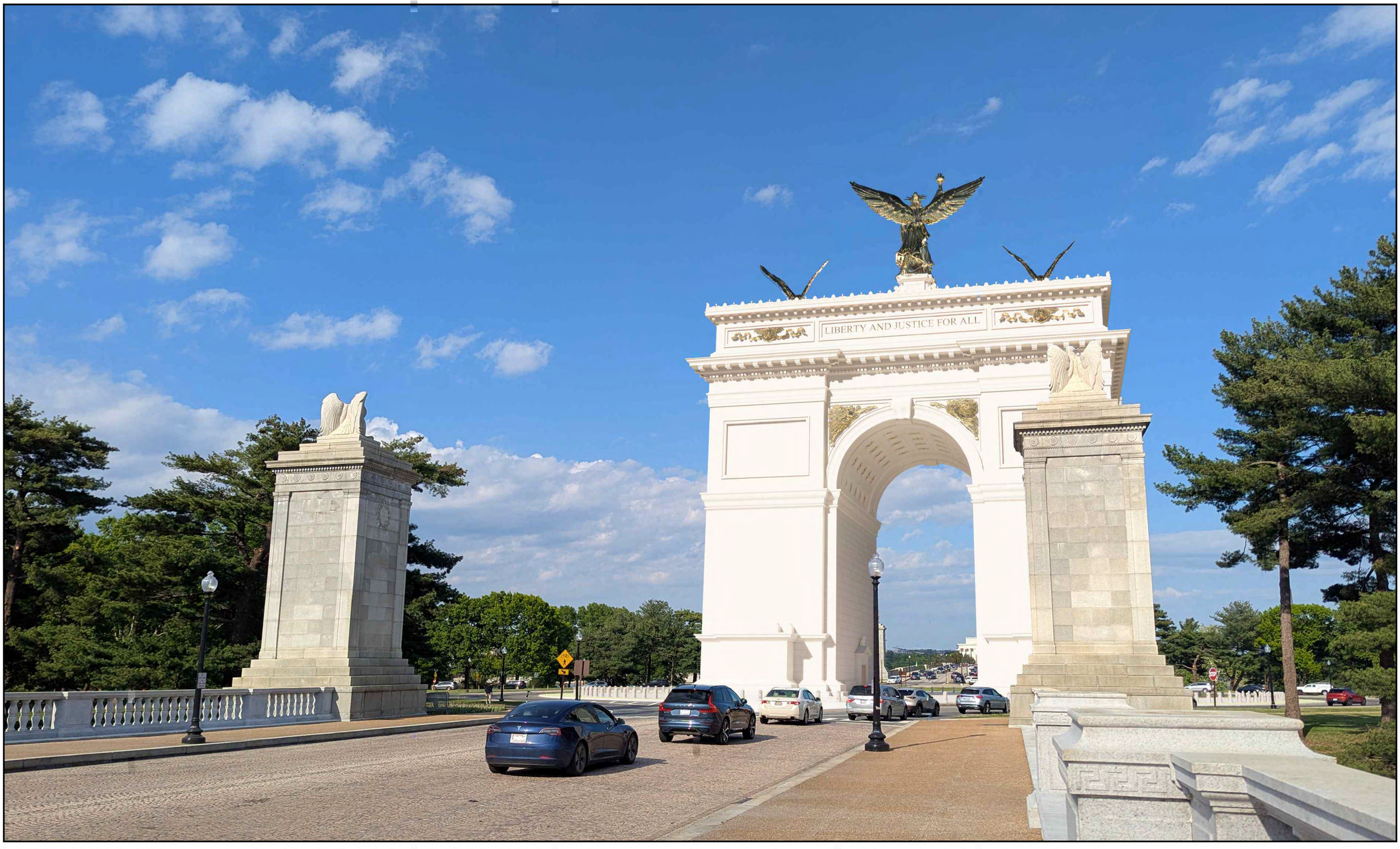


MAY 7, 2026

# TRIUMPHAL ARCH - WASHINGTON, DC

VIEW FROM ARLINGTON BRIDGE - AFTER

HARRISON DESIGN

MAY 7, 2026

# TRIUMPHAL ARCH - WASHINGTON, DC

VIEW FROM MEMORIAL BRIDGE - BEFORE

HARRISON DESIGN

MAY 7, 2026

# TRIUMPHAL ARCH - WASHINGTON, DC

VIEW FROM MEMORIAL BRIDGE - AFTER

HARRISON DESIGN

MAY 7, 2026

# TRIUMPHAL ARCH - WASHINGTON, DC

VIEW FROM PARKWAY DR NW - BEFORE

HARRISON DESIGN

MAY 7, 2026

# TRIUMPHAL ARCH - WASHINGTON, DC

VIEW FROM PARKWAY DR NW - AFTER

HARRISON DESIGN

MAY 7, 2026

# TRIUMPHAL ARCH - WASHINGTON, DC

VIEW FROM LINCOLN MEMORIAL CIRCLE - BEFORE

HARRISON DESIGN

MAY 7, 2026

# TRIUMPHAL ARCH - WASHINGTON, DC

VIEW FROM LINCOLN MEMORIAL CIRCLE - AFTER

HARRISON DESIGN

MAY 7, 2026

# TRIUMPHAL ARCH - WASHINGTON, DC

VIEW FROM LINCOLN MEMORIAL - BEFORE

HARRISON DESIGN

MAY 7, 2026

# TRIUMPHAL ARCH - WASHINGTON, DC

VIEW FROM LINCOLN MEMORIAL - AFTER

HARRISON DESIGN

MAY 7, 2026

# TRIUMPHAL ARCH - WASHINGTON, DC

VIEW FROM WASHINGTON MONUMENT - BEFORE

HARRISON DESIGN

MAY 7, 2026

# TRIUMPHAL ARCH - WASHINGTON, DC

VIEW FROM WASHINGTON MONUMENT - AFTER

HARRISON DESIGN

MAY 7, 2026

# TRIUMPHAL ARCH - WASHINGTON, DC

VIEW FROM WASHINGTON MONUMENT - BEFORE

HARRISON DESIGN

MAY 7, 2026

# TRIUMPHAL ARCH - WASHINGTON, DC

VIEW FROM WASHINGTON MONUMENT - AFTER

HARRISON DESIGN

MAY 7, 2026

# TRIUMPHAL ARCH - WASHINGTON, DC

VIEW FROM CAPITOL HILL - BEFORE

HARRISON DESIGN

MAY 7, 2026

# TRIUMPHAL ARCH - WASHINGTON, DC

VIEW FROM CAPITOL HILL - AFTER

HARRISON DESIGN

MAY 14, 2026

# TRIUMPHAL ARCH - WASHINGTON, DC

VIEW FROM CAPITOL HILL - BEFORE

HARRISON DESIGN

MAY 14, 2026

# TRIUMPHAL ARCH - WASHINGTON, DC

VIEW FROM CAPITOL HILL - AFTER

HARRISON DESIGN

MAY 14, 2026

# TRIUMPHAL ARCH - WASHINGTON, DC

VIEW FROM OBSERVATION DECK TOWARD EAST

HARRISON DESIGN

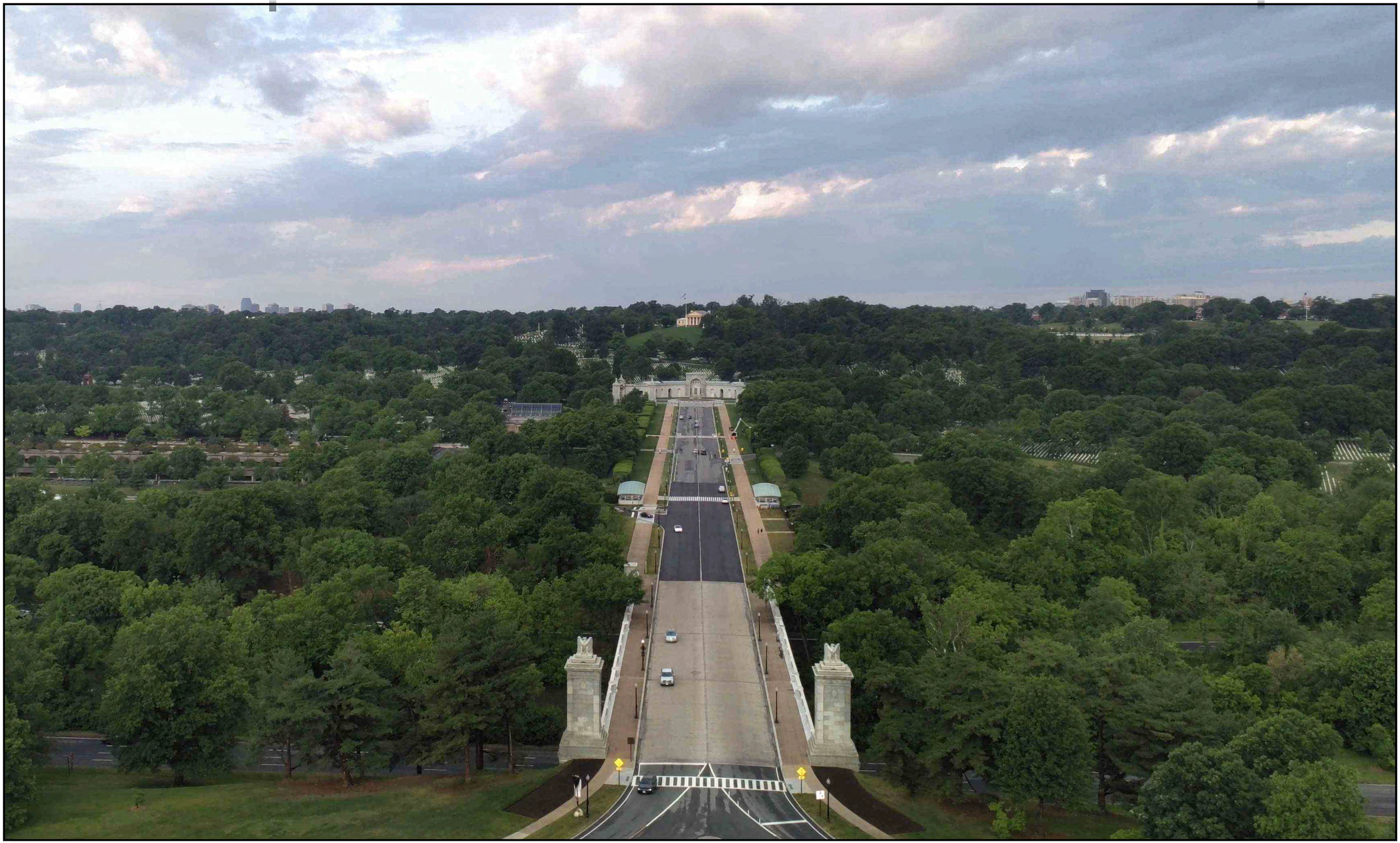

MAY 14, 2026

# TRIUMPHAL ARCH - WASHINGTON, DC

VIEW FROM OBSERVATION DECK TOWARD WEST

HARRISON DESIGN

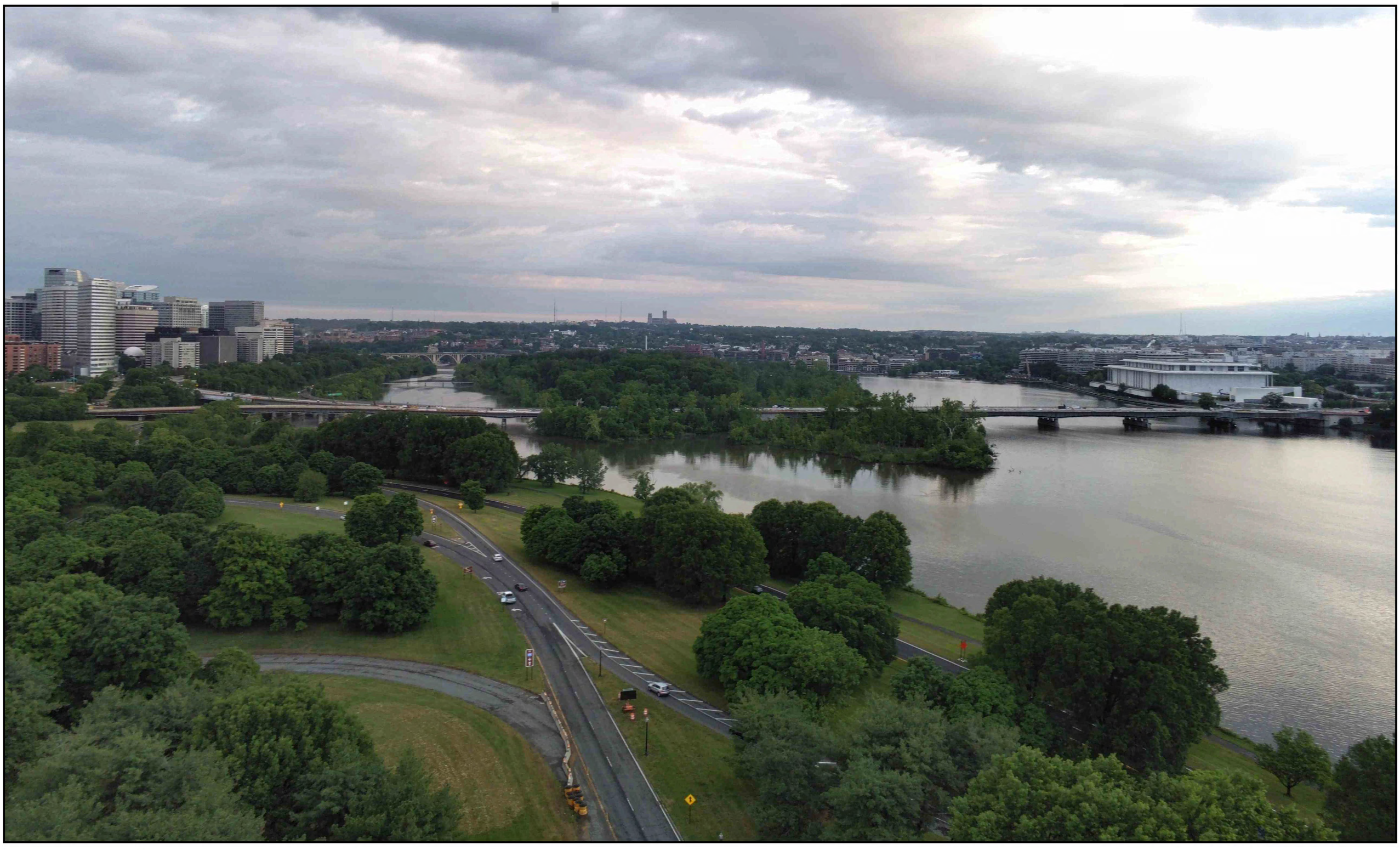

MAY 14, 2026

# TRIUMPHAL ARCH - WASHINGTON, DC

VIEW FROM OBSERVATION DECK TOWARD NORTHEAST

HARRISON DESIGN

MAY 14, 2026

# TRIUMPHAL ARCH - WASHINGTON, DC

VIEW FROM OBSERVATION DECK TOWARD SOUTH

HARRISON DESIGN

AUGUST 21, 2026

# TRIUMPHAL ARCH - WASHINGTON, DC

ARLINGTON NATIONAL CEMETERY SECTION 35 - UNCHANGED

HARRISON DESIGN

AUGUST 21, 2026

# TRIUMPHAL ARCH - WASHINGTON, DC

ARLINGTON NATIONAL CEMETERY SECTION 43 - BEFORE

HARRISON DESIGN

AUGUST 21, 2026

# TRIUMPHAL ARCH - WASHINGTON, DC

ARLINGTON NATIONAL CEMETERY SECTION 43 - AFTER

HARRISON DESIGN

AUGUST 21, 2026

# TRIUMPHAL ARCH - WASHINGTON, DC

ARLINGTON NATIONAL CEMETERY SECTION 43 - NIGHT - BEFORE

HARRISON DESIGN

AUGUST 21, 2026

# TRIUMPHAL ARCH - WASHINGTON, DC

ARLINGTON NATIONAL CEMETERY SECTION 43 - NIGHT - AFTER

HARRISON DESIGN

AUGUST 21, 2026

# TRIUMPHAL ARCH - WASHINGTON, DC

ARLINGTON NATIONAL CEMETERY SECTION 43 - NIGHT - AFTER

HARRISON DESIGN

AUGUST 21, 2026

# TRIUMPHAL ARCH - WASHINGTON, DC

ARLINGTON NATIONAL CEMETERY SECTION 55 - BEFORE

HARRISON DESIGN

# TRIUMPHAL ARCH - WASHINGTON, DC

ARLINGTON NATIONAL CEMETERY SECTION 55 - AFTER

AUGUST 21, 2026

HARRISON DESIGN

AUGUST 21, 2026

# TRIUMPHAL ARCH - WASHINGTON, DC

ARLINGTON NATIONAL CEMETERY SECTION 57 - BEFORE

HARRISON DESIGN

AUGUST 21, 2026

# TRIUMPHAL ARCH - WASHINGTON, DC

ARLINGTON NATIONAL CEMETERY SECTION 57 - AFTER

HARRISON DESIGN

AUGUST 21, 2026

# TRIUMPHAL ARCH - WASHINGTON, DC

ARLINGTON NATIONAL CEMETERY SECTION 60 - UNCHANGED

HARRISON DESIGN

AUGUST 21, 2026

# TRIUMPHAL ARCH - WASHINGTON, DC

ARLINGTON NATIONAL CEMETERY SECTION 60 - NIGHT - UNCHANGED

HARRISON DESIGN

AUGUST 21, 2026

# TRIUMPHAL ARCH - WASHINGTON, DC

ARLINGTON NATIONAL CEMETERY SECTION 66 - UNCHANGED

HARRISON DESIGN

AUGUST 21, 2026

# TRIUMPHAL ARCH - WASHINGTON, DC

ARLINGTON NATIONAL CEMETERY SECTION 73 - BEFORE

HARRISON DESIGN

AUGUST 21, 2026

# TRIUMPHAL ARCH - WASHINGTON, DC

ARLINGTON NATIONAL CEMETERY SECTION 73 - AFTER

HARRISON DESIGN

AUGUST 21, 2026

# TRIUMPHAL ARCH - WASHINGTON, DC

ARLINGTON NATIONAL CEMETERY SECTION 74 - BEFORE

HARRISON DESIGN

AUGUST 21, 2026

# TRIUMPHAL ARCH - WASHINGTON, DC

ARLINGTON NATIONAL CEMETERY SECTION 74 - AFTER

HARRISON DESIGN

AUGUST 21, 2026

# TRIUMPHAL ARCH - WASHINGTON, DC

ARLINGTON NATIONAL CEMETERY SECTION 75 - BEFORE

HARRISON DESIGN

AUGUST 21, 2026

# TRIUMPHAL ARCH - WASHINGTON, DC

ARLINGTON NATIONAL CEMETERY SECTION 75 - AFTER

HARRISON DESIGN

AUGUST 21, 2026

# TRIUMPHAL ARCH - WASHINGTON, DC

ARLINGTON NATIONAL CEMETERY SECTION 76 - BEFORE

HARRISON DESIGN

AUGUST 21, 2026

# TRIUMPHAL ARCH - WASHINGTON, DC

ARLINGTON NATIONAL CEMETERY SECTION 76 - AFTER

HARRISON DESIGN

AUGUST 21, 2026

# TRIUMPHAL ARCH - WASHINGTON, DC

LEE HOUSE PORTICO - BEFORE

HARRISON DESIGN

AUGUST 21, 2026

# TRIUMPHAL ARCH - WASHINGTON, DC

LEE HOUSE PORTICO - AFTER

HARRISON DESIGN

AUGUST 21, 2026

# TRIUMPHAL ARCH - WASHINGTON, DC

LEE HOUSE PORTICO - NIGHT - BEFORE

HARRISON DESIGN

AUGUST 21, 2026

# TRIUMPHAL ARCH - WASHINGTON, DC

LEE HOUSE PORTICO - NIGHT - AFTER

HARRISON DESIGN

AUGUST 21, 2026

# TRIUMPHAL ARCH - WASHINGTON, DC

LEE HOUSE PORTICO - NIGHT - AFTER

HARRISON DESIGN

AUGUST 21, 2026

# TRIUMPHAL ARCH - WASHINGTON, DC

ARLINGTON NATIONAL CEMETERY - TOMB OF THE UNKNOWN SOLDIER - UNCHANGED

HARRISON DESIGN

# TRIUMPHAL ARCH - WASHINGTON, DC

ARLINGTON NATIONAL CEMETERY - TOMB OF THE UNKNOWN SOLDIER - UNCHANGED

AUGUST 21, 2026

HARRISON DESIGN

AUGUST 21, 2026

# TRIUMPHAL ARCH - WASHINGTON, DC

ARLINGTON NATIONAL CEMETERY - TOMB OF THE UNKNOWN SOLDIER - UNCHANGED

HARRISON DESIGN

AUGUST 21, 2026

# TRIUMPHAL ARCH - WASHINGTON, DC

ARLINGTON NATIONAL CEMETERY - TOMB OF THE UNKNOWN SOLDIER - NIGHT - UNCHANGED

HARRISON DESIGN

AUGUST 21, 2026

# TRIUMPHAL ARCH - WASHINGTON, DC

ARLINGTON NATIONAL CEMETERY - MEMORIAL AMPHITHEATER - UNCHANGED

HARRISON DESIGN

AUGUST 21, 2026

# TRIUMPHAL ARCH - WASHINGTON, DC

ARLINGTON NATIONAL CEMETERY - MEMORIAL AMPHITHEATER - NIGHT - UNCHANGED

HARRISON DESIGN

# TRIUMPHAL ARCH - WASHINGTON, DC

NETHERLANDS CARILLON - BEFORE

AUGUST 21, 2026

HARRISON DESIGN

AUGUST 21, 2026

# TRIUMPHAL ARCH - WASHINGTON, DC

NETHERLANDS CARILLON - AFTER

HARRISON DESIGN

AUGUST 21, 2026

# TRIUMPHAL ARCH - WASHINGTON, DC

NETHERLANDS CARILLON - NIGHT - BEFORE

HARRISON DESIGN

AUGUST 21, 2026

# TRIUMPHAL ARCH - WASHINGTON, DC

NETHERLANDS CARILLON - NIGHT - AFTER

HARRISON DESIGN

AUGUST 21, 2026

# TRIUMPHAL ARCH - WASHINGTON, DC

NETHERLANDS CARILLON - NIGHT - AFTER

HARRISON DESIGN

AUGUST 21, 2026

# TRIUMPHAL ARCH - WASHINGTON, DC

US MARINE CORPS WAR MEMORIAL - BEFORE

HARRISON DESIGN

AUGUST 21, 2026

# TRIUMPHAL ARCH - WASHINGTON, DC

US MARINE CORPS WAR MEMORIAL - AFTER

HARRISON DESIGN

AUGUST 21, 2026

# TRIUMPHAL ARCH - WASHINGTON, DC

US MARINE CORPS WAR MEMORIAL - NIGHT - BEFORE

HARRISON DESIGN

AUGUST 21, 2026

# TRIUMPHAL ARCH - WASHINGTON, DC

US MARINE CORPS WAR MEMORIAL - NIGHT - AFTER

HARRISON DESIGN

AUGUST 21, 2026

# TRIUMPHAL ARCH - WASHINGTON, DC

US MARINE CORPS WAR MEMORIAL - NIGHT - AFTER

HARRISON DESIGN

AUGUST 21, 2026

# TRIUMPHAL ARCH - WASHINGTON, DC

MEMORIAL CIRCLE - BEFORE

HARRISON DESIGN

KEY PLAN: MAP SOURCE: GOOGLE

AUGUST 21, 2026

# TRIUMPHAL ARCH - WASHINGTON, DC

MEMORIAL CIRCLE - AFTER

HARRISON DESIGN

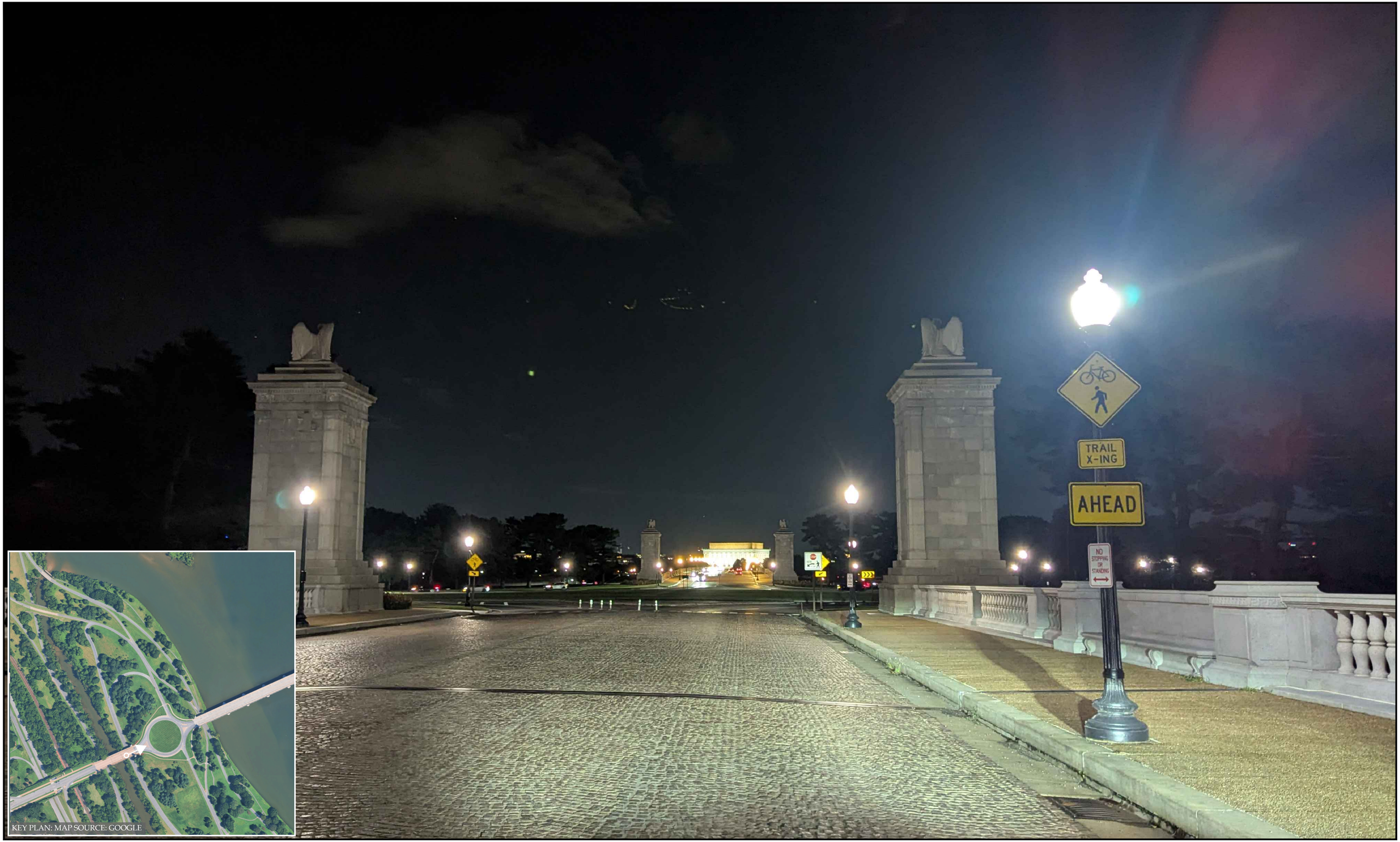





AUGUST 21, 2026

# TRIUMPHAL ARCH - WASHINGTON, DC

MEMORIAL CIRCLE - NIGHT - BEFORE

HARRISON DESIGN

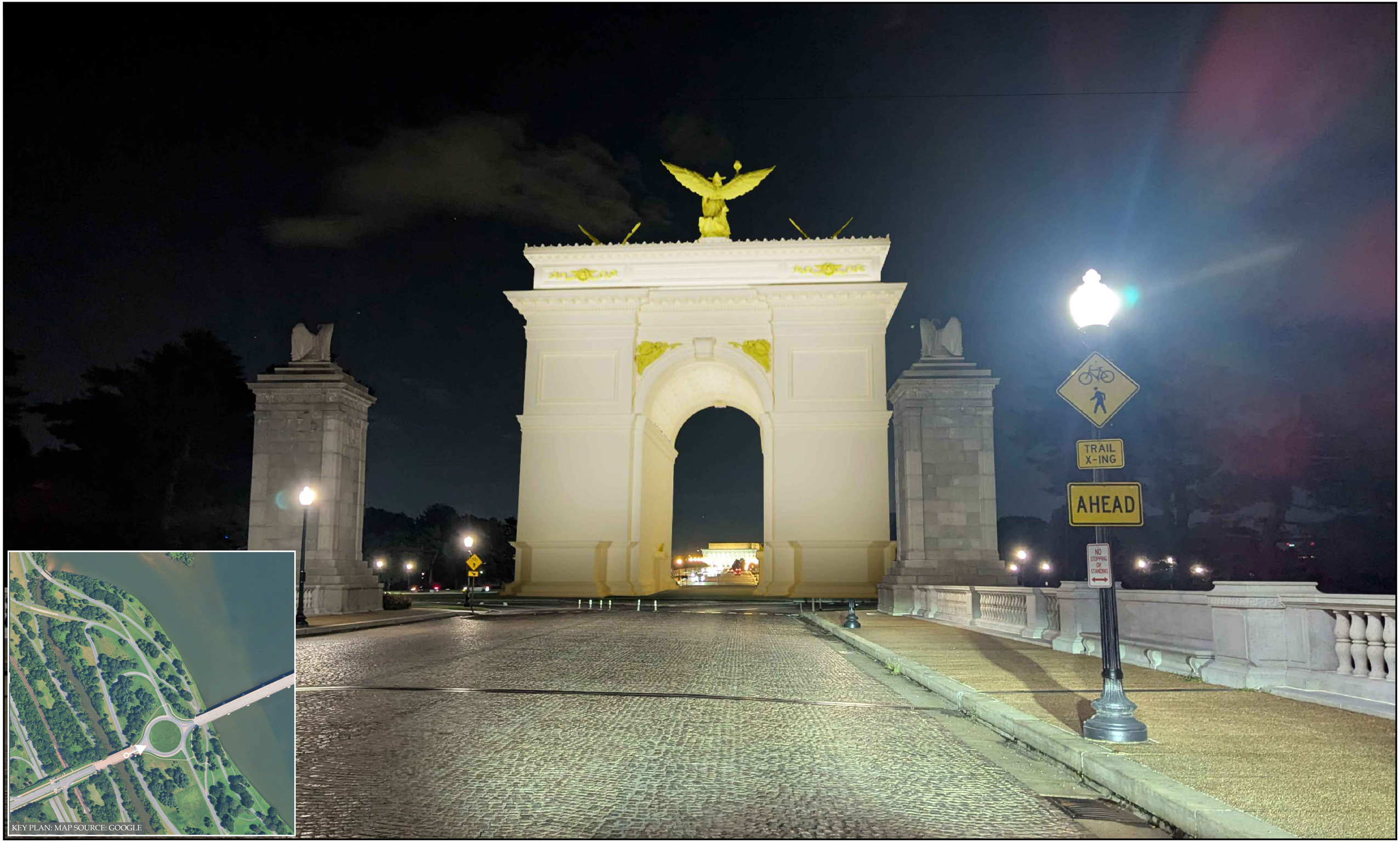



KEY PLAN: MAP SOURCE: GOOGLE

AUGUST 21, 2026

# TRIUMPHAL ARCH - WASHINGTON, DC

MEMORIAL CIRCLE - NIGHT - AFTER

HARRISON DESIGN

KEY PLAN: MAP SOURCE: GOOGLE

AUGUST 21, 2026

# TRIUMPHAL ARCH - WASHINGTON, DC

MEMORIAL CIRCLE - NIGHT - AFTER

HARRISON DESIGN

AUGUST 21, 2026

# TRIUMPHAL ARCH - WASHINGTON, DC

LINCOLN PORCH - BEFORE

HARRISON DESIGN

AUGUST 21, 2026

# TRIUMPHAL ARCH - WASHINGTON, DC

LINCOLN PORCH - AFTER

HARRISON DESIGN

AUGUST 21, 2026

# TRIUMPHAL ARCH - WASHINGTON, DC

LINCOLN PORCH - NIGHT - BEFORE

HARRISON DESIGN

AUGUST 21, 2026

# TRIUMPHAL ARCH - WASHINGTON, DC

LINCOLN PORCH - NIGHT - AFTER

HARRISON DESIGN

AUGUST 21, 2026

# TRIUMPHAL ARCH - WASHINGTON, DC

LINCOLN PORCH - NIGHT - AFTER

HARRISON DESIGN

AUGUST 21, 2026

# TRIUMPHAL ARCH - WASHINGTON, DC

WATERGATE STEPS - BEFORE

HARRISON DESIGN

AUGUST 21, 2026

# TRIUMPHAL ARCH - WASHINGTON, DC

WATERGATE STEPS - AFTER

HARRISON DESIGN

AUGUST 21, 2026

# TRIUMPHAL ARCH - WASHINGTON, DC

WATERGATE STEPS - NIGHT- BEFORE

HARRISON DESIGN

AUGUST 21, 2026

# TRIUMPHAL ARCH - WASHINGTON, DC

WATERGATE STEPS - NIGHT- AFTER

HARRISON DESIGN

AUGUST 21, 2026

# TRIUMPHAL ARCH - WASHINGTON, DC

WATERGATE STEPS - NIGHT- AFTER

HARRISON DESIGN

AUGUST 21, 2026

# TRIUMPHAL ARCH - WASHINGTON, DC

KEY BRIDGE - BEFORE

HARRISON DESIGN

AUGUST 21, 2026

# TRIUMPHAL ARCH - WASHINGTON, DC

KEY BRIDGE - AFTER

HARRISON DESIGN

AUGUST 21, 2026

# TRIUMPHAL ARCH - WASHINGTON, DC

KEY BRIDGE - NIGHT - BEFORE

HARRISON DESIGN

AUGUST 21, 2026

# TRIUMPHAL ARCH - WASHINGTON, DC

KEY BRIDGE - NIGHT - AFTER

HARRISON DESIGN

AUGUST 21, 2026

# TRIUMPHAL ARCH - WASHINGTON, DC

KEY BRIDGE - NIGHT - AFTER

HARRISON DESIGN

AUGUST 21, 2026

# TRIUMPHAL ARCH - WASHINGTON, DC

JEFFERSON MEMORIAL - BEFORE

HARRISON DESIGN

AUGUST 21, 2026

# TRIUMPHAL ARCH - WASHINGTON, DC

JEFFERSON MEMORIAL - AFTER

HARRISON DESIGN

AUGUST 21, 2026

# TRIUMPHAL ARCH - WASHINGTON, DC

JEFFERSON MEMORIAL - NIGHT - BEFORE

HARRISON DESIGN

AUGUST 21, 2026

# TRIUMPHAL ARCH - WASHINGTON, DC

JEFFERSON MEMORIAL - NIGHT - AFTER

HARRISON DESIGN

AUGUST 21, 2026

# TRIUMPHAL ARCH - WASHINGTON, DC

JEFFERSON MEMORIAL - NIGHT - AFTER

HARRISON DESIGN

AUGUST 21, 2026

# TRIUMPHAL ARCH - WASHINGTON, DC

MARTIN LUTHER KING JR. MEMORIAL - UNCHANGED

HARRISON DESIGN

AUGUST 21, 2026

# TRIUMPHAL ARCH - WASHINGTON, DC

MARTIN LUTHER KING JR. MEMORIAL - NIGHT - UNCHANGED

HARRISON DESIGN

AUGUST 21, 2026

# TRIUMPHAL ARCH - WASHINGTON, DC

WORLD WAR II MEMORIAL - UNCHANGED

HARRISON DESIGN

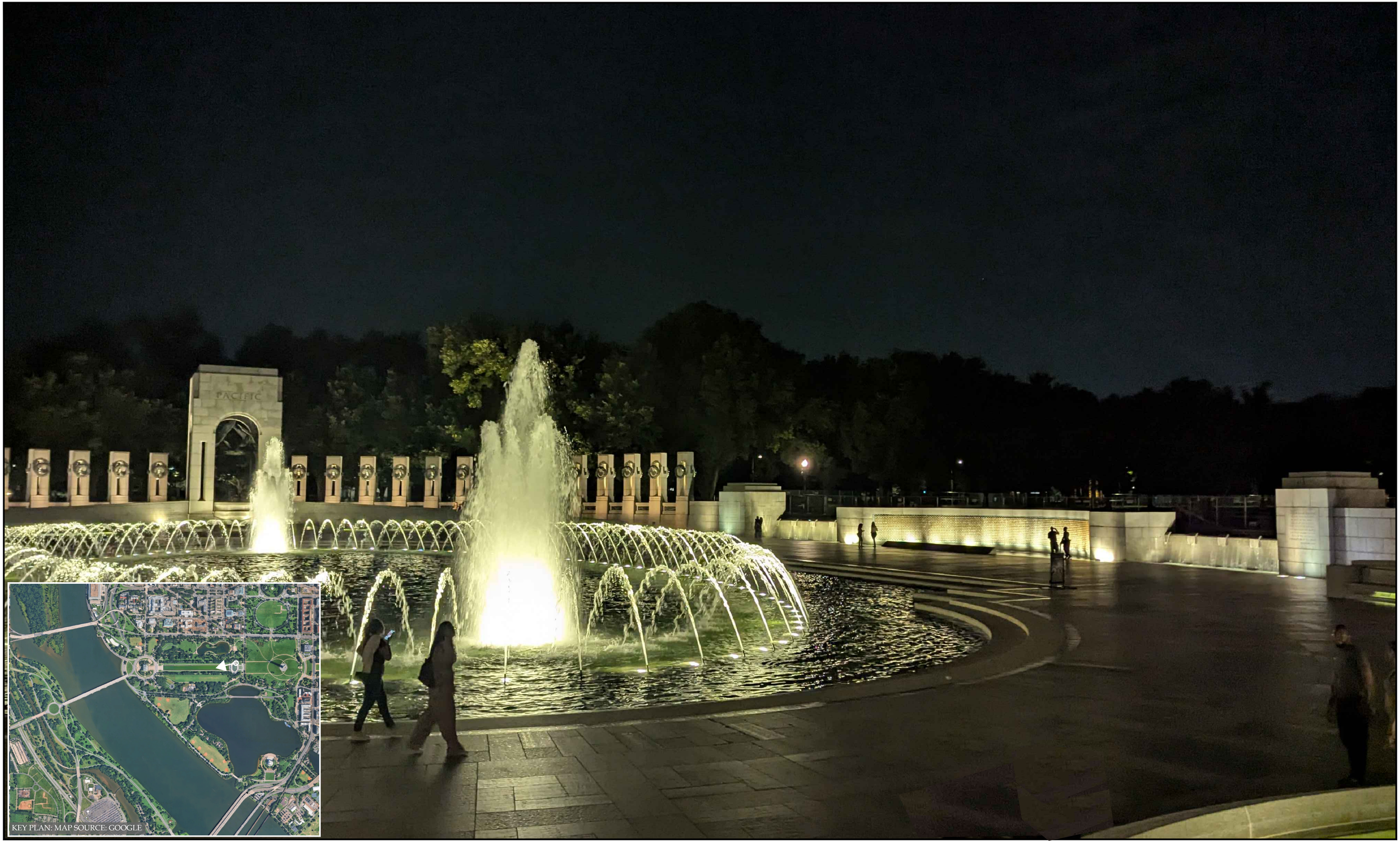





AUGUST 21, 2026

# TRIUMPHAL ARCH - WASHINGTON, DC

WORLD WAR II MEMORIAL - NIGHT - UNCHANGED

HARRISON DESIGN

AUGUST 21, 2026

# TRIUMPHAL ARCH - WASHINGTON, DC

WASHINGTON MONUMENT - BEFORE

HARRISON DESIGN

AUGUST 21, 2026

# TRIUMPHAL ARCH - WASHINGTON, DC

WASHINGTON MONUMENT - AFTER

HARRISON DESIGN

AUGUST 21, 2026

# TRIUMPHAL ARCH - WASHINGTON, DC

WASHINGTON MONUMENT - NIGHT - BEFORE

HARRISON DESIGN

AUGUST 21, 2026

# TRIUMPHAL ARCH - WASHINGTON, DC

WASHINGTON MONUMENT - NIGHT - AFTER

HARRISON DESIGN

AUGUST 21, 2026

# TRIUMPHAL ARCH - WASHINGTON, DC

WASHINGTON MONUMENT - NIGHT - AFTER

HARRISON DESIGN

AUGUST 21, 2026

# TRIUMPHAL ARCH - WASHINGTON, DC

PENTAGON - MALL TERRACE - BEFORE

HARRISON DESIGN

AUGUST 21, 2026

# TRIUMPHAL ARCH - WASHINGTON, DC

PENTAGON - MALL TERRACE - AFTER

HARRISON DESIGN

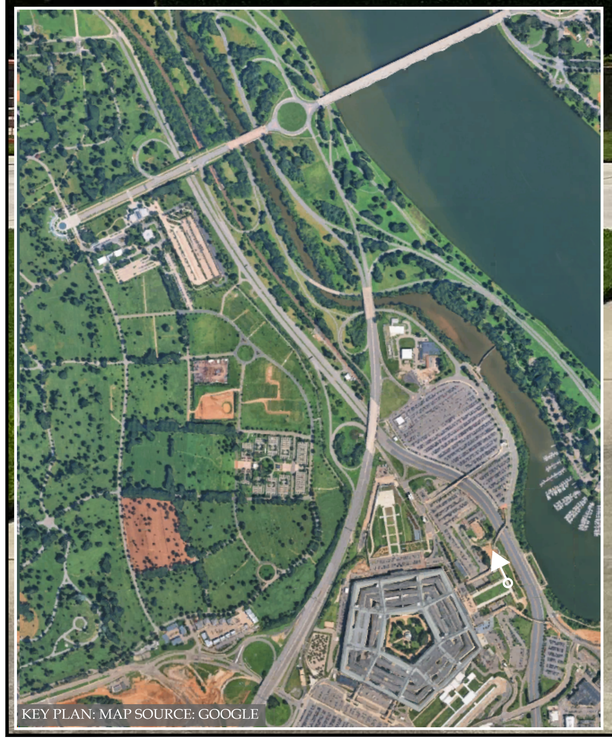


AUGUST 21, 2026

# TRIUMPHAL ARCH - WASHINGTON, DC

PENTAGON - RIVER TERRACE - BEFORE

HARRISON DESIGN

AUGUST 21, 2026

# TRIUMPHAL ARCH - WASHINGTON, DC

PENTAGON - RIVER TERRACE - AFTER

HARRISON DESIGN

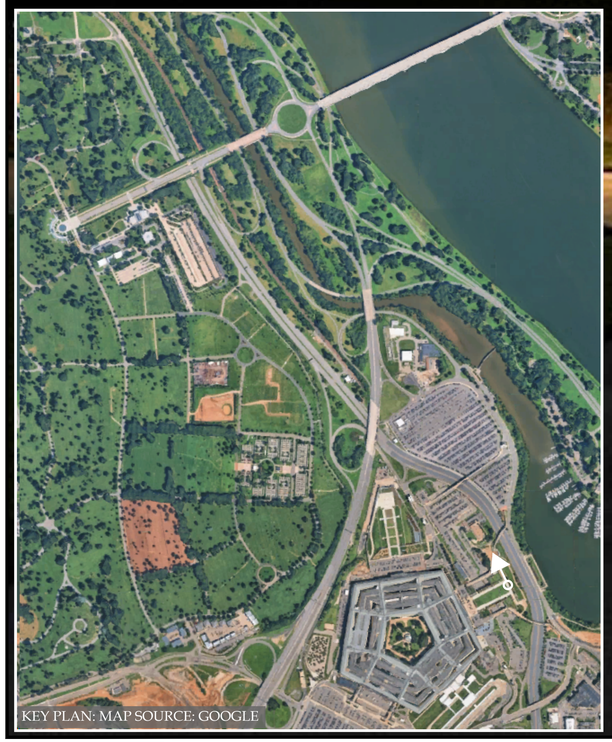


AUGUST 21, 2026

# TRIUMPHAL ARCH - WASHINGTON, DC

PENTAGON - RIVER TERRACE - NIGHT - BEFORE

HARRISON DESIGN

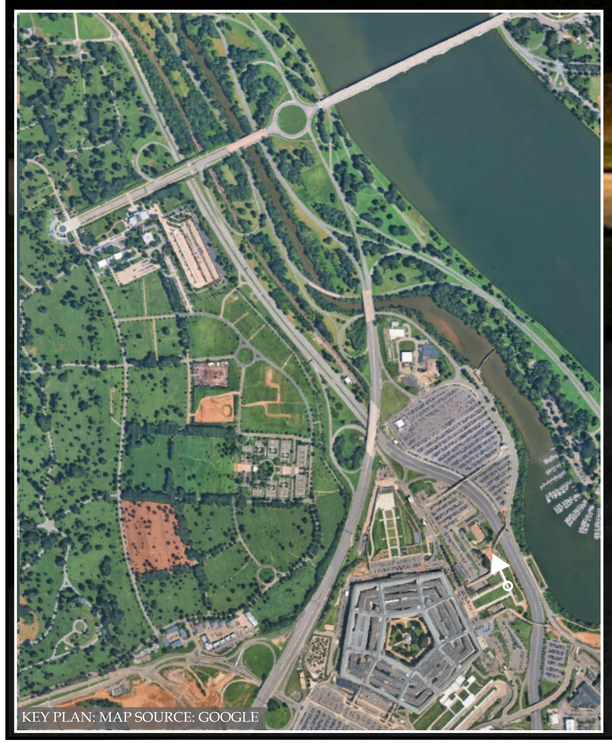


AUGUST 21, 2026

# TRIUMPHAL ARCH - WASHINGTON, DC

PENTAGON - RIVER TERRACE - NIGHT - AFTER

HARRISON DESIGN

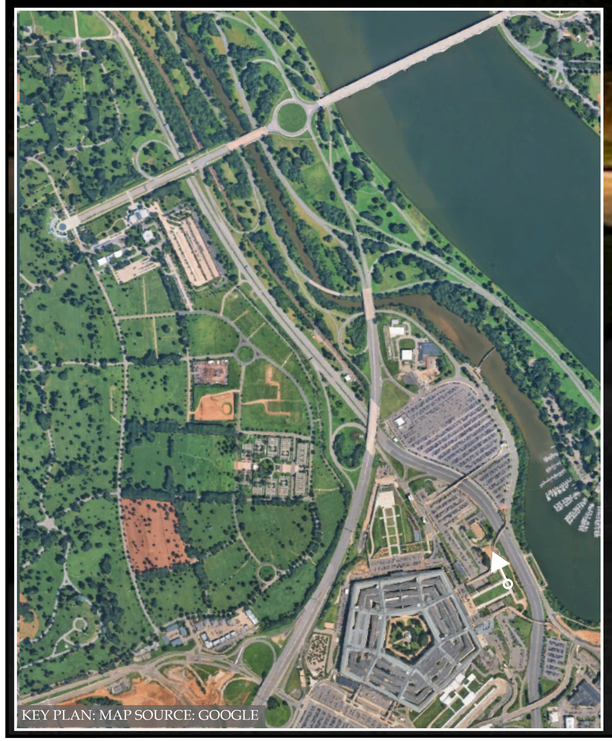


AUGUST 21, 2026

# TRIUMPHAL ARCH - WASHINGTON, DC

PENTAGON - RIVER TERRACE - NIGHT - AFTER

HARRISON DESIGN

# Area of Potential Effect on Historic Properties | Triumphal Arch Site

**George Washington Memorial Parkway**
Washington, D.C.

National Register Historic Properties

## LEGEND

- Area of Potential Effect
- Project Area
- Construction Staging Area
- Potential Utility Corridors

### Individual Structures

- 6 Arlington House (Robert E. Lee Memorial)
- 15 Lockkeeper's House, C & O Canal Extension
- 16 56 Signers Memorial
- 19 Washington Monument
- 21 Civil War Monuments in Washington, D.C. (Adjacent Lands)
- 24 American Revolutionary Statuary in the District of Columbia
- 26 Cuban Friendship Urn
- 32 Quarters 1 (NHL- Adjacent Lands)
- 35 Washington Canoe Club
- 41 U.S. Capitol Gatehouses and Gateposts
- 43 White House

### District Boundaries

- 2 Arlington Memorial Bridge and Related Features
- 4 Arlington National Cemetery Historic District
- 5 Arlington House Historic District (also known as Robert E. Lee Historic District)
- 8 Lyndon Baines Johnson Memorial Grove on the Potomac
- 9 Mount Vernon Memorial Highway
- 11 Lincoln Memorial
- 12 National Mall
- 13 World War II Memorial
- 14 Martin Luther King Jr. Memorial
- 18 Washington Monument and Grounds Historic District
- 22 Rock Creek Park and Potomac Parkway Historic District
- 23 East and West Potomac Parks Historic District
- 27 Franklin Delano Roosevelt Memorial
- 28 L'Enfant Plan of the City of Washington, District of Columbia
- 29 Arlington Ridge Park
- 30 Pentagon (NHL- Adjacent Lands)
- 31 Fort Myer Historic District (NHL- Adjacent Lands)
- 33 Theodore Roosevelt Island
- 37 Thomas Jefferson Memorial
- 39 DC War Memorial
- 40 United States Capitol (NHL- Adjacent Lands)
- 42 Smithsonian Building (NHL- Adjacent Lands)
- 44 Georgetown Historic District (NHL- NPS and Adjacent Lands)
- 45 Old Naval Observatory (NHL- Adjacent Lands)
- 46 Observatory Hill Historic District
- 47 Pennsylvania Avenue National Historic Site

**Notes**
1. Projection: NAD 1983
2. PRELIMINARY (2026)

**Sources**
1. ESRI World Imagery Basemap
2. NCR Cultural Resources GIS

**National Park Service**
National Capital Region

**Drawing #1** (1 of 6)

# Area of Potential Effect on Historic Properties | Triumphal Arch Site

**George Washington Memorial Parkway**
Washington, D.C.

National Register Historic Properties

## LEGEND

- Project Area
- Construction Staging Area
- Potential Utility Corridors

### Individual Structures

- 6 Arlington House
- 15 Lockkeeper's House, C & O Canal Extension
- 16 56 Signers Memorial
- 19 Washington Monument
- 21 Civil War Monuments in Washington, D.C. (Adjacent Lands)
- 24 American Revolutionary Statuary in the District of Columbia
- 26 Cuban Friendship Urn
- 32 Quarters 1 (NHL- Adjacent Lands)
- 41 U.S. Capitol Gatehouses and Gateposts
- 43 White House

### District Boundaries

- 2 Arlington Memorial Bridge and Related Features
- 4 Arlington National Cemetery Historic District
- 5 Arlington House Historic District (also known as Robert E. Lee Historic District)
- 8 Lyndon Baines Johnson Memorial Grove on the Potomac
- 9 Mount Vernon Memorial Highway
- 11 Lincoln Memorial
- 12 National Mall
- 13 World War II Memorial
- 14 Martin Luther King Jr. Memorial
- 18 Washington Monument and Grounds Historic District
- 22 Rock Creek Park and Potomac Parkway Historic District
- 23 East and West Potomac Parks Historic District
- 27 Franklin Delano Roosevelt Memorial
- 28 L'Enfant Plan of the City of Washington, District of Columbia
- 29 Arlington Ridge Park
- 30 Pentagon (NHL- Adjacent Lands)
- 31 Fort Myer Historic District (NHL- Adjacent Lands)
- 33 Theodore Roosevelt Island
- 37 Thomas Jefferson Memorial
- 39 DC War Memorial
- 45 Old Naval Observatory (NHL- Adjacent Lands)
- 46 Observatory Hill Historic District
- 47 Pennsylvania Avenue National Historic Site

**Notes**
1. Projection: NAD 1983
2. PRELIMINARY (2026)

**Sources**
1. ESRI World Imagery Basemap
2. NCR Cultural Resources GIS

**National Park Service**
National Capital Region

**Drawing #1A** (2 of 6)

# Area of Potential Effect on Historic Properties | Triumphal Arch Site

**George Washington Memorial Parkway**
Washington, D.C.

Cultural Landscapes

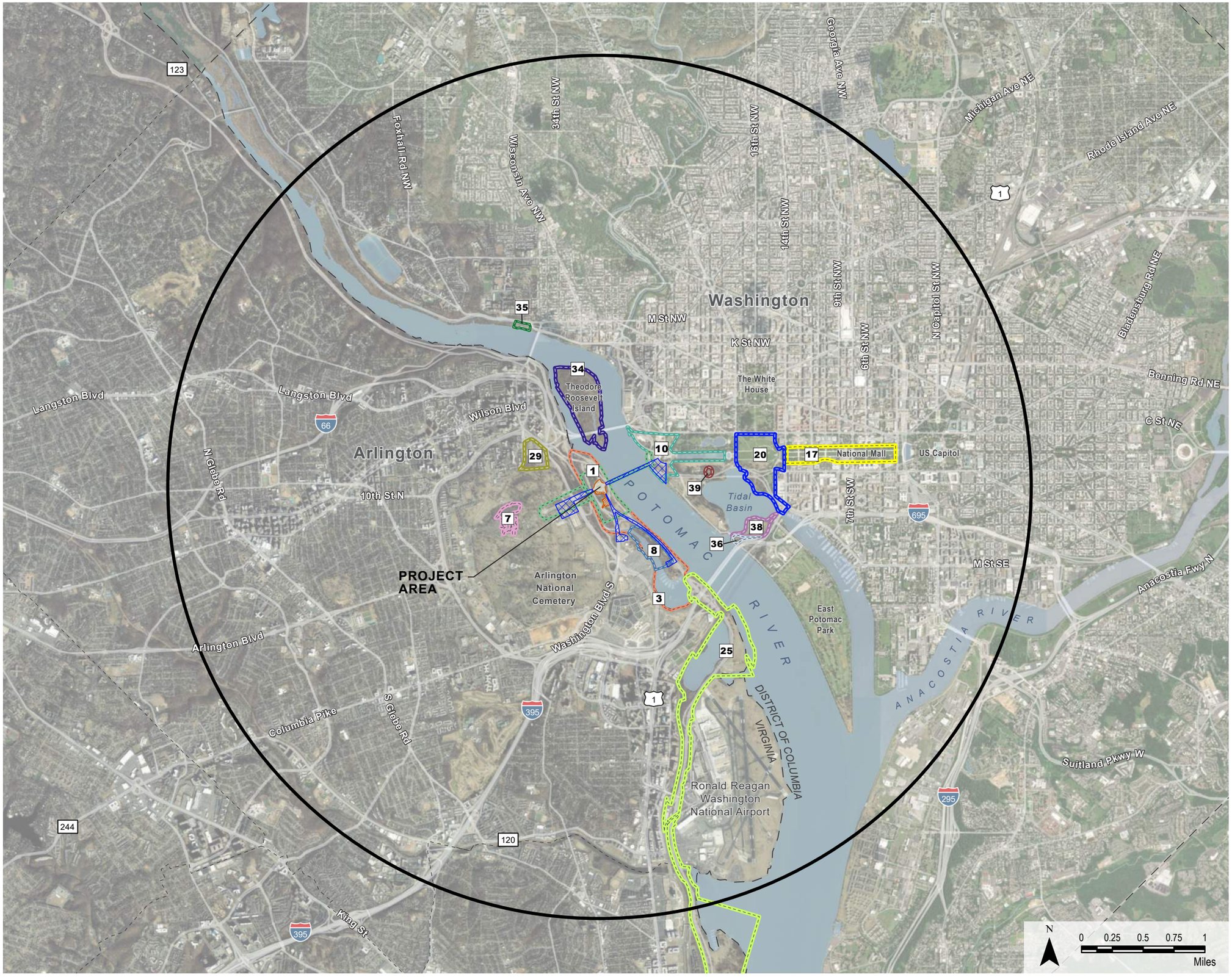


## LEGEND

- Area of Potential Effect
- Project Area
- Construction Staging Area
- Potential Utility Corridors

- 1 Memorial Avenue Corridor
- 3 Lady Bird Johnson Park
- 7 Arlington House
- 8 Lyndon Baines Johnson Memorial Grove on the Potomac
- 10 Lincoln Memorial
- 17 The Mall
- 20 Washington Monument Grounds
- 25 Mount Vernon Memorial Highway - North of Alexandria
- 29 Arlington Ridge Park
- 34 Theodore Roosevelt Island
- 35 Washington Canoe Club
- 36 George Mason Memorial
- 38 Thomas Jefferson Memorial
- 39 DC War Memorial

**Notes**
1. Projection: NAD 1983
2. PRELIMINARY (2026)

**Sources**
1. ESRI World Imagery Basemap
2. NCR Cultural Resources GIS

**National Park Service**
National Capital Region

**Drawing #2** (3 of 6)

# Area of Potential Effect on Historic Properties | Triumphal Arch Site

**George Washington Memorial Parkway**
Washington, D.C.

Cultural Landscapes

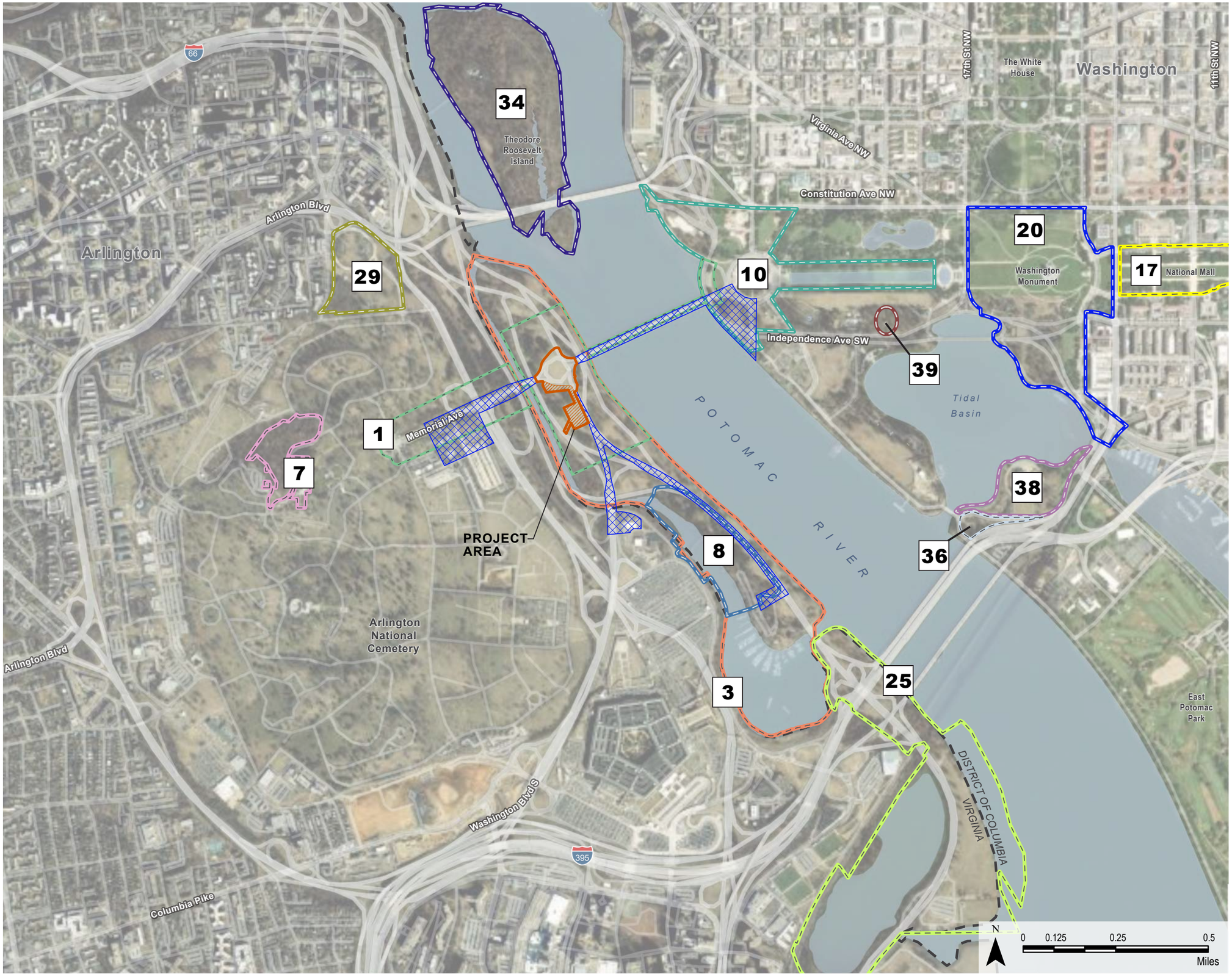


## LEGEND

- Project Area
- Construction Staging Area
- Potential Utility Corridors

- 1 Memorial Avenue Corridor
- 3 Lady Bird Johnson Park
- 7 Arlington House
- 8 Lyndon Baines Johnson Memorial Grove on the Potomac
- 10 Lincoln Memorial
- 17 The Mall
- 20 Washington Monument Grounds
- 25 Mount Vernon Memorial Highway - North of Alexandria
- 29 Arlington Ridge Park
- 34 Theodore Roosevelt Island
- 36 George Mason Memorial
- 38 Thomas Jefferson Memorial
- 39 DC War Memorial

**Notes**
1. Projection: NAD 1983
2. PRELIMINARY (2026)

**Sources**
1. ESRI World Imagery Basemap
2. NCR Cultural Resources GIS

**National Park Service**
National Capital Region

**Drawing #2A** (4 of 6)

# Viewshed Analysis Map | Triumphal Arch Site

**George Washington Memorial Parkway**
Washington, D.C.

National Register Historic Properties

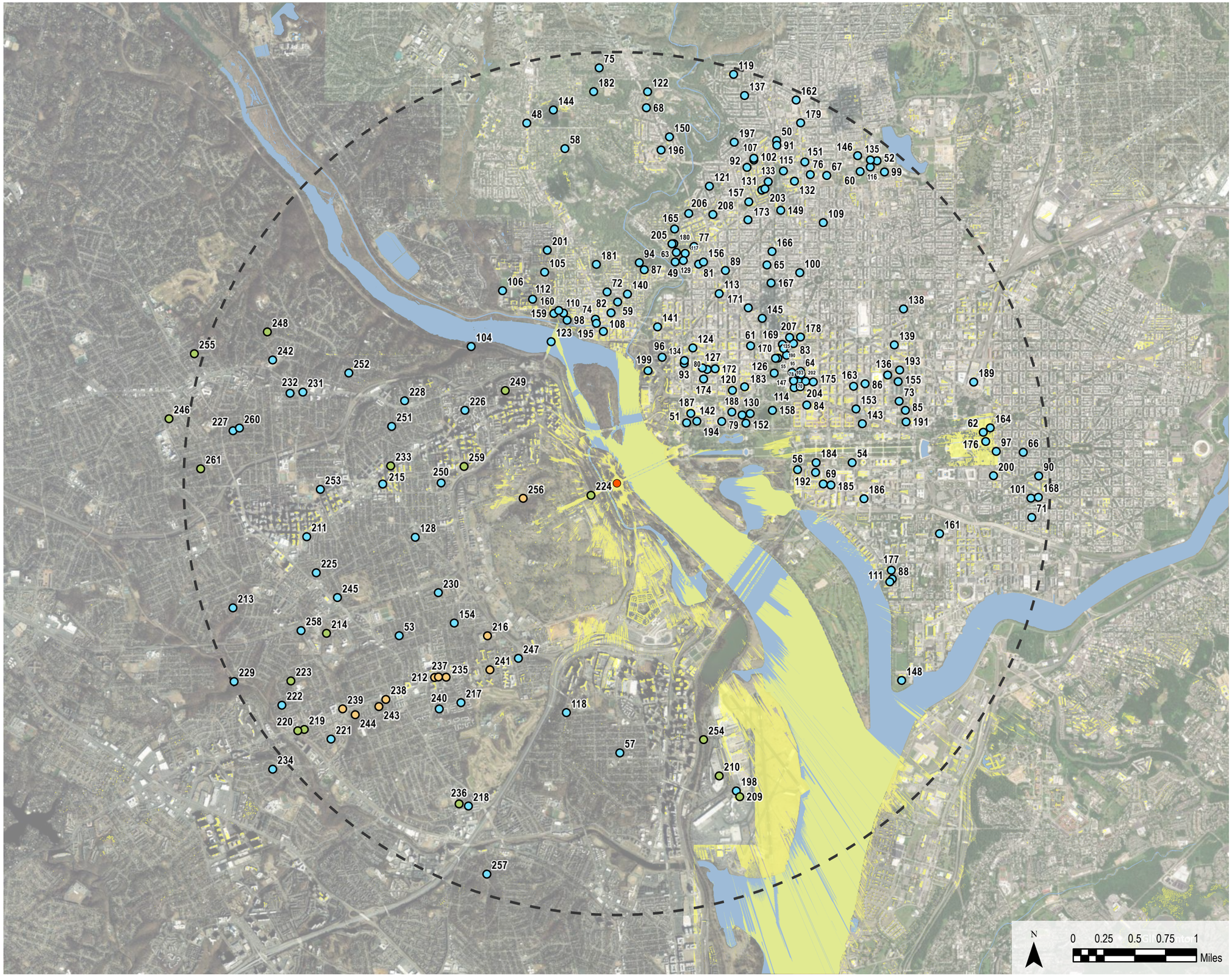


## LEGEND

- Area of Potential Effect
- Viewshed Area
- Project Location

Resources

- NRHP Listed
- Determined Eligible
- DHR Staff: Potentially Eligible

Note: The Viewshed Area maps do not include resources already included on Drawings 1 through 2a.

**Notes**
1. Projection: NAD 1983
2. PRELIMINARY (2026)

**Sources**
1. ESRI World Imagery Basemap
2. NRIS Dataset (NPS)

**National Park Service**
National Capital Region

**Drawing #3** (5 of 6)

# Viewshed Analysis Map | Triumphal Arch Site

**George Washington Memorial Parkway**
Washington, D.C.

National Register Historic Properties

## LEGEND

- Area of Potential Effect
- Viewshed Area
- Project Location

Resources

- NRHP Listed
- Determined Eligible
- DHR Staff: Potentially Eligible

Note: The Viewshed Area maps do not include resources already included on Drawings 1 through 2a.

N
0 0.25 0.5 Miles

**Notes**
1. Projection: NAD 1983
2. PRELIMINARY (2026)

**Sources**
1. ESRI World Imagery Basemap
2. NRIS Dataset (NPS)

**National Park Service**
National Capital Region

**Drawing #3a** (6 of 6)