The Mountain Howitzer at Big Hole National Battlefield: A Technical and Historical Report

Mark T. Fiege
Park Tech./Interp.
Summer 1984

THE MODEL 1841 BRONZE TWELVE POUND MOUNTAIN HOWITZER

Nineteenth century artillery came in three types: mortars, guns, and howitzers. A mortar was fat and short--the diameter of the bore exceeded its length--and fired projectiles at high trajectories. A gun had a long, rifled barrel, and fired projectiles at high velocity and at a low, or flat, trajectory. A howitzer (from the German haubitze, formerly haufnitze, which originated in the Czech word houfnice, or "catapult") was shorter and lighter than a gun of the same caliber, qualities which made it ideal for field and mountain use, where mobility was important. It had a smoothbore and fired shells at low velocity over a shorter range and higher trajectory than a gun, over obstacles that a gun could not reach. At the end of the bore the howitzer had a chamber of smaller diameter. (1)

A howitzer was a light piece which fired a relatively large and heavy projectile. The weapon underwent less stress and a weaker recoil if the powder charge behind the projectile was made as small as possible. The chamber confined the reduced powder charge and made the gasses from the explosion at ignition more compressed and thus more efficient in propelling the projectile out of the bore--without the chamber, the howitzer would not have been as powerful. (2)

In the 1860s most cannon were made of either iron, or in the case of mountain howitzers and other artillery, bronze. Bronze for cannon, according to specifications in the 1862 Ordnance Manual, consisted of an alloy , "90 parts of copper and 10 of tin, more or less." Colonel John Gibbon, in his 1859 Artillerist's Manual, stated that bronze "is made of 100 parts copper and about ten of tin; a variation of 1 part tin, more or less, being allowed." The combination of copper and tin was stronger and more weather resistant than either of the two metals alone. Bronze, it should be noted, is sometimes mistaken for brass, which is a mixture of copper and zinc. (3)

As cannon material bronze had particular advantages over iron. It was lighter, and a greater flexibility allowed it to be made thinner and longer for a given weight, important factors in terms of mobility. Also, the friction created when an iron projectile was fired from a bronze barrel was less. These qualities made bronze ideal for many field howitzers, including the mountain variety. On the other hand, bronze is softer than iron, so the bore was more apt to be gouged, dented and scraped by fired projectiles bouncing in the barrel, due to the large difference (called tolerance, or windage) between bore and projectile diameter (bore 4.62", projectile 4.52"). Bronze was also more expensive; Colonel Gibbon noted that in 1859 bronze cannon sold for about forty five cents per pound while iron pieces cost six to six-and-one-half cents per pound. (4)

Artillery aficionados sometimes refer to the mountain howitzer as "Model of 1835," but because the Army restarted registry numbers six years later, the cannon is usually termed the "Model of 1841." Weight of the projectile (12 pounds), not the diameter of the bore (4.62"), determined the caliber. None of the projectiles, however, weighed exactly twelve pounds. Attached to a powder charge, a shell weighed 9.8 pounds, a spherical case shot 11.6, and cannister 11.8. The "twelve pound" designation for the mountain howitzer came from the weight of a solid shot it could fire. Under normal circumstances, though, the mountain howitzer never fired such a projectile. (5)

HISTORY OF THE MOUNTAIN HOWITZER

Little information exists concerning the origins of the mountain howitzer. Supposedly, the United States military copied a design for the cannon from a model that the French Army used to subdue Algerians in the mountainous regions of their African homeland. In 1829 Lieutenant Daniel Tyler travelled to Europe to inspect different types of weaponry. Captain Alfred Mordecai went there for the same purpose in 1834. It is possible that either officer learned of the mountain howitzer. Today, modern researchers examine Mordecai's drawings to obtain exact measurements of the weapon. (1)

In 1836, Andrew Jackson's Secretary of War Lewis Cass approved for Army use the light twelve-pound cannon, which he thought would be effective in battle against the Seminole Indians. In June of that year the Government contracted with Cyrus Alger and Company to produce the first American-made mountain howitzers. The firm delivered twelve pieces to the Army in May, 1837. For the next several decades, U.S. Army cannoneers wielded mountain howitzers against enemies in three major conflicts--the Mexican War, the Civil War, and on the Western frontier against Indians. (2)

During the Mexican War (1846-48) the military employed mountain howitzers extensively. Over the course of the conflict Cyrus Alger and Company manufactured for the U.S. Government thirty-eight of the cannon, which cost about seventy five cents per pound. In 1846 Lieutenant Colonel George Talcott organized a special battery of mountain howitzers and crews for service in Mexico. The Army found the howitzers particularly useful in street fighting, because their small size, light weight and ease of dismantlement allowed troops to carry them to rooftops for firing. Two existent specimens of the mountain howitzer now located at Fort Jay, Governor's Island, New York, are engraved with the date "1847" and the names of six important battles: Vera Cruz, Cerro Gordo, Contreras, Churubusco, Chapultepec, and City of Mexico. The Navy, lacking any adequate small cannon for use on boats cruising the shallow Mexican coastline, experimented with mountain howitzers for use on their craft. Two mountain howitzers stamped "USN 1" and "USN 2," along with the initials of Andrew Alan Harwood, a Navy ordnance officer, sit in the United States Navy Yard in Washington, D.C. After the war, in 1849, the Army set up a board of officers who prepared a manual for mountain howitzers so that instruction in the operation of the weapon could take place at military posts. Their work, Instruction for Mountain Artillery, was published in 1851. (3)

Manufacture of mountain howitzers continued into the Civil War. In the North, the Alger and Ames companies produced one hundred mountain howitzers each in 1863. That same year Ames made the cannon which now resides at Big Hole National Battlefield. The South built a few mountain howitzers at the Tredegar foundry in Richmond. Private firms did not cast howitzers solely for the U.S. Army. In 1855, during the period of sectional tension and conflict between North and South which preceeded the war, Ames sold a mountain howitzer to some anti-slavery New York citizens, who then donated the cannon to the "Free-State" party of Kansas for use against pro-slavery, southern forces living in the same state. The anti-slavery fighters later surrendered the piece to their enemies. (4)

During the war neither side used the mountain howitzer very much, probably because of the weapon's limited range compared to larger cannon. In some mountainous areas such as West Virginia, however, mountain howitzers performed a significant

role in battle. Elsewhere, Confederate Officer John D. Imboden, fighting with Stonewall Jackson in Virginia during the Shenandoah campaign, in one incident effectively employed mountain howitzers against Federal troops below his position on a slope of the Blue Ridge mountains. (5)

Throughout the frontier West Army units employed mountain howitzers against Indians. Unlike the Civil War, in the West soldiers seldom massed cannon together in batteries. Usually only one or two pieces trundled along behind the infantry or cavalry while on campaign. Sometimes, alone or in small numbers, mountain howitzers proved inadequate in battle. It is possible that the slow movement and rate of fire of the mountain howitzer made the cannoneers vulnerable to enemy bullets during the oftentimes remarkably fast and fluid Indian attacks and battles. The best example of this was the 1877 Battle of Big Hole in Montana, where Nez Perce warriors captured the 7th Infantry's mountain howitzer after the crew managed to fire only two ineffective rounds. The Indians killed one of the men and wounded two others, while the rest ran away. (6)

Still, a mountain howitzer was a valuable addition to a military force. Probably the presence of even a single powerful artillery piece provided a group of soldiers with at least some degree of psychological security during dangerous and frightening expeditions. And, at some fights it was a worthy arm. U.S. Army topographical engineer John C. Fremont and his party took along a mountain howitzer while exploring the West in 1843-44, and found the cannon useful in discouraging Indian attacks. In Arizona at the Battle of Apache Pass in July of 1862, an Army command under Captain Thomas L. Roberts turned back an Apache assault. Exploding shells from mountain howitzers killed nearly all of the sixty six warriors who died in the fight. At the Battle of Adobe Walls, Colorado, in 1864, Kit Carson's soldiers employed two mountain howitzers in defeating a combined Kiowa and Comanche force. That same year Colonel John M. Chivington's men fired two of the cannon in the process of nearly wiping out a band of Cheyenne Indians peacefully camped along Sand Creek in Colorado. (7)

THE MOUNTAIN HOWITZER CARRIAGE

Designers originally intended that a mule pull the howitzer and its carriage, or that the weapon be dismantled and packed on the backs of several of the animals. But, while rolling over the open, rough prairies of the West, soldiers found that mountain howitzer carriages had a propensity for overturning. Furthermore, the pack capability at times hindered the men. Major H.L. Hendrick, after a trip over a section of New Mexico, lamented that his mules were too small and said that the time required to unpack them was "ruinous." As a result of such experiences, in 1850 the Army developed a new and more stable carriage with a longer axletree (54" to the old 38") and higher wheels (42" as compared to 38"). For an even firmer ride the carriage was hitched behind a special two-wheeled limber which two horses towed. Another horse pulled a two-wheeled caisson, or "prairie ammunition cart," which carried four chests filled with ammunition and another with implements. (1)

Later, the prairie carriage developed problems. Poor design and weak construction prevented it from withstanding the rigors of recoil. The axletree proved particularly vulnerable, often cracking. To strengthen it, the Government in 1855 ordered manufacturers to add an iron rib and to increase the wooden section by 3/4 of an inch in thickness. For more stability, manufacturers also increased the length of the trail. (2)

MANUFACTURE OF ARTILLERY

During the middle of the nineteenth century, several private contractors under the direction of the Ordnance Department manufactured weapons and ammunition for the United States Army. Two firms, Cyrus Alger and Company of Boston and the Ames Manufacturing Company of Chicopee, Massachusetts (just north of Springfield, on the Connecticut River, about one hundred miles west of Boston), built most of the mountain howitzers supplied to the government. In 1863 Ames fabricated the specimen now located at Big Hole National Battlefield.

Ames exemplified the Yankee ingenuity and prosperity that characterized the economy of nineteenth century New England. Two brothers of considerable mechanical expertise--James Tyler and Nathan Peabody Ames--established the firm in 1834 after assuming control of their father's tool and cutlery business in 1829. The new company produced a variety of metal goods but continued to specialize in edged implements. Ames apparently operated the first sword factory in the United States and received government contracts for sabers. These instruments became renowned for their high quality. Later, during the 1840s and 1850s, the outfit built textile machinery, mining equipment, bronze statuary, lathes, planes, turbine water wheels, sewing machines, and bicycles. More importantly, the enter prise was one of the first to build a standard line of machine tools which, sold to other industries, allowed the diffusion of new manufacturing skills and techniques. (1)

In 1836 the business branched into production of cannon and other military accoutrements. From that time Ames became closely associated with the manufacture of American munitions. In 1840, the Ordnance Department commissioned Nathan to inspect and study European arsenals and gun factories. Bronze artillery, along with the famous Ames swords, were the showpieces of the company. In 1853 James exhibited eight U.S. Army bronze cannon, including a mountain howitzer, at a technological fair in New York. (2)

Many of the machine tools the Ames Company marketed were gun-making equipment. Customers for these devices included the nations of Great Britain, Russia, and Spain, as well as the United States. Between 1830 and 1854 Ames, along with the American Machine Works, supplied the United States Armory at Harpers Ferry, Virginia, with four out of every five new machines installed. From 1845 to 1854 Ames sold ten stocking machines (for making rifle stocks) and twenty six milling machines to the armory. (3)

Throughout the Civil War Ames was one of the greatest producers of munitions in the nation, manufacturing swords, Springfield rifles, and "a thousand cannon" for the Federal government. During this time the company built the Big Hole mountain howitzer. (4)

Fashioning a cannon involved a series of technological processes, including initial casting, boring and turning the weapon to finished dimensions, and final inspection. First, foundrymen surrounded a solid wooden model of the piece with a sheet iron case. A mixture of sand and clay was packed into the remaining space inside, around the model. Next, the model was removed, leaving the mold, which was baked hard in an oven. The men then placed the mold in a pit, breech down, and poured molten bronze into the form through a channel. After cooling completely, the mold was removed from around the hardened metal. Because the cannon was not cast hollow it needed to be bored. (5)

Workers fixed the piece on a machine similar to a lathe, which rotated the barrel lengthwise along its axis. (see illustration) When the machine was started, a cutting device in the shape of a hollow cylinder bored into the muzzle, two to three feet at a time. The solid mass of bronze left behind inside, cylindrical in shape, was broken off with a wedge. For the howitzer a smaller tool, called a chamber cutter, bored the firing chamber inside the breech end. A reamer was run into the bore, finishing it to proper dimension (diameter 4.62"). While machinists bored the cannon, they also applied cutting instruments which shaped the weapon's exterior to proper size. The piece was placed in a special lathe to cut the trunnions. Finally, workers cut a threaded hole for the copper vent piece, which was screwed into place and drilled open. The weapon was then ready for inspection. (6)

At the Ames foundry Army Captain of Ordnance Alexander Brydie Dyer examined the Big Hole mountain howitzer. Before an officer approved a piece he subjected it to several standard tests. First he scrutinized it for defects such as cracks, cavities, or discoloration which indicated weaknesses in the metal. He then checked the cannon for any great variation from the proper weight (approximately 220 pounds) which might reveal a defect in the alloy. Next, the inspector measured the howitzer with several specialized gauges to insure that its dimensions were correct. To "proof" the weapon he laid the piece on the ground, muzzle resting on a block of wood, and fired it three times with fixed ammunition. Originally, this test required oversized charges, but ordnance officers discontinued the practice by the time of the Civil War because it weakened a cannon without really demonstrating that the piece could withstand extreme stress sometime in the future. Lastly, the vent hole was plugged and the cannon filled with pressurized water. Seepage around the ventpiece or water oozing from cracks along the bore after the piece was emptied and dried indicated flaws. (7)

Had Captain Dyer found any defects, or had the weapon not fired correctly, he would have rejected it. After approval, the government number (111), inspector's initials (A.B.D.), foundry initials (A.M.Co.), year of fabrication (1863), and weight of the piece in pounds (224) were stamped on the face of the muzzle, and the letters "U.S." affixed on the upper surface of the barrel near the trunnions. (Note: these last letters do not appear on the Big Hole specimen, possibly because a private maker, not a Federal arsenal, cast the piece.) (8)

Uri Gilbert and Son of Troy, New York, built the limber now located at Big Hole. Although the business was best known for manufacture of non-military transportation, such as stagecoaches and railroad cars, during the Civil War it produced wagons, limbers, and about five hundred gun carriages for the United States Army. The carriage that the State of Montana delivered to the park in 1922 (with the mountain howitzer) did not meet official specifications. The history of the vehicle is obscure. At some time either an Army unit or subsequent owners improperly constructed and/or modified it. As a result, the park in 1977 acquired a replica made according to original plans. Because the Uri Gilbert Company fabricated prairie carriages in addition to limbers, it is possible that a Gilbert model originally accompanied the Big Hole cannon. An Army memorandum of receipts lists seventy five prairie carriages sent to Watervliet Arsenal from Gilbert during March and April, 1863. This accords nicely with the construction date of the howitzer. (9)

Carriages and limbers were built principally of oak, to exacting detail. Hickory, a tough and flexible wood, was used for axletrees. Ammunition chests and wheel

naves were made of black walnut and wheel felloes of elm. Normally, the Army painted carriages and limbers an olive color, but original parts from the Big Hole specimens showed a mustard hue. Big Hole National Battlefield historians applied the non-standard paint scheme to the vehicles on the supposition that at some time an Army unit changed the original color, perhaps because the soldiers believed it better suited their needs. (10)

Ammunition for the howitzer was founded in a manner similar to the howitzer, except that a sand core inside the mold created the necessary hollow for powder and shot. For inspection, projectiles were also weighed and measured with special gauges. Spherical case was painted red, while all other projectiles were colored black and then lacquered. (11)

After the manufacturers finished making the separate components--howitzer barrel, prairie carriage, ammunition, and limber--they delivered their products to Federal arsenals such as Watervliet, where the Army assembled them prior to disbursement to a military unit.

THE MOUNTAIN HOWITZER AT BIG HOLE NATIONAL BATTLEFIELD

Military records reveal little of the history behind the Big Hole mountain howitzer. After manufacture, Ames shipped the cannon to a nearby Federal arsenal, possibly Watervliet. There the Army mounted it on a carriage. What happened to it after that remains obscure. Documents from the Army Chief of Ordnance reveal nothing about weapons issued to regiments and posts during the period 1866-1876. Apparently, pertinent records were somehow destroyed. (1)

Other data, however, show that the Army sent two twelve-pound mountain howitzers, engraved with serial numbers 111 (the number on the Big Hole specimen) and 112, to Montana Territorial military posts. By 1877 one was at Fort Shaw and the other at Fort Benton, but nothing indicates at which place either specifically resided. Records in the National Archives mention that the Army transferred a mountain howitzer from Fort Shaw to Fort Missoula in 1877, and that in August of the same year Colonel John Gibbon and the 7th Infantry "and one mountain howitzer" left there, most likely in pursuit of the Nez Perce. (2)

After the Big Hole battle, Colonel Gibbon and his men recovered the howitzer and took it with them to Deer Lodge, where they put the wounded soldiers of the 7th Infantry in a hospital. Exactly what happened to the cannon in Deer Lodge is unclear. Mention of it never appears again in surviving Army documents. Fort Missoula records for September and November, for example, list no pieces of artillery there. Evidently Gibbon left it behind. He may have turned it over to the Territorial prison located in the city, with or without the permission of the Army. An unsigned letter from the historical files of the Montana State Prison, dated June 10, 1916, stated that a cannon was brought to Deer Lodge after the Big Hole Battle and given to the penitentiary. The author, perhaps the prison warden, added that "I am having it painted and wish to hang a sign on it with its history." An article in the November 9, 1889 issue of the Helena Journal reported that on November 7,"U.S. Marshal Irvin...manned the prison ordnance"--a twelve pound howitzer--and fired from it forty one shots in celebration of Montana statehood. The final shot, "a heavy charge to note Montana's importance," broke the carriage on which the cannon rested. In 1918, W.Y. Pemberton, Librarian of the State Historical and Miscellaneous Library, told noted historian L.V. McWhorter that the howitzer was sitting on "the grounds of the state pen-

itentiary at Deer Lodge." (The Territorial prison had subsequently become the Montana State Penitentiary.) Federal authorities, Army or civilian, may have deemed the weapon more useful in guarding convicts or sitting as a noble relic on the lawn of the prison, reminding Montanans of their frontier military heritage. (3)

Evidently all of the hearsay had some credence. In 1922, John B. Somers, a U.S. Forest Service official in the Beaverhead National Forest, asked Governor Joseph M. Dixon to transfer the cannon from the prison over to his jurisdiction, as the Forest Service then administered the Big Hole historic site. On January 30, the Governor authorized the move. Since that time, the model 1841 twelve-pound mountain howitzer, number 111, has remained at the National Battlefield. From the available though sketchy evidence it appears to be the same one Colonel Gibbon and the 7th Infantry took with them to the Battle of Big Hole. In 1976 the carriage was replaced because the old one did not meet official specifications. Among other inaccuracies, the stock trail was too large and not made of oak. It is possible that workmen built the older carriage at the prison following the destructive Montana statehood celebration. (4)

OPERATION OF THE MOUNTAIN HOWITZER

A six-man crew of "cannoneers" operated the mountain howitzer. The gunner commanded the detachment and aimed the piece. The rest of the men, disignated by numbers one through five, performed other specific duties during battle. A howitzer unit could fire a weapon at the rate of about two rounds per minute. A good team, if pressed, could double the rate, to four rounds. (1) Firing the howitzer involved eight steps:

1) Sighting Before firing, the cannoneers needed to aim their weapon as accurately as possible. To begin, the gunner determined the range (the distance from the howitzer to the target), in yards. He could have employed any of several methods to obtain this measurement. (2)

One involved pacing over the ground to the target, an option seldom used unless enough time existed before a fight to do so safely. Or, with previous practice a cannoneer could estimate by eye the yardage to a human form, based on how it appeared: indistinguishable among masses of troops--1600 yards, discernable as a single figure--1000, movement of arms and legs apparent--800, head noticeable--500, buttons clearly observable--150, whites of eyes visible--80, etc. A more accurate technique involved the use of a range-finder, or stadia. (3)

To make a crude stadia, a wooden stake was held vertically, at arm's length. A soldier of average height stood fifty yards away. The top of his head was brought in line with the top of the stick. The length of the stick that he appeared to cover was marked into eight equal parts. If the soldier moved away, until he covered only one of those subdivisions, the gunner knew that the man was at a range of 50 yards x 8 = 400 yards. This device was accurate only at short distances. (4)

A better stadia consisted of a metal plate with an isosceles (two equal sides) triangle cut out of the middle. When holding the stadia correctly the triangle appeared to be on its side. (see illustration) The gunner looked at a man standing in proximity to the target and then lined him up inside the triangle so that his head and feet just touched the sides. Graduations along the length of the triangle marked the correct distance reading. A string attached to the slider, with the opposite end knotted and held between the teeth, kept the stadia

at a uniform distance from the gunner's eye. Graduations were determined by experiment, as with the wooden stadia, or by a complex trigonometric calculation. (5)

After establishing the distance to the target, the gunner referred to a Table of Ranges that listed the corresponding proper elevation for the howitzer barrel. A copy of the table was often stuck (possibly tacked, glued or framed) inside the lid of the ammunition chest, and the gunner may have memorized it. If, for example, he found the target to be 1000 yards away (the approximate maximum range for the mountain howitzer), he raised the muzzle of the tube to 5°. (6)

To attain correct barrel elevation the gunner used a pendulum hausse (or, simply "hause"), a type of sight with a sliding scale graduated in degrees, located on the rear of the breech. This device originated in the Russian Army during the 19th century. It consisted of a ruler-like brass scale, in degrees (1° to 5°, bottom to top) attached at the lower end to a bulb or disc. Dimensions of each particular model of cannon determined the size of the divisions on the scale. A combination slide and sight moved vertically through a slit on the scale. Tightened in place with a brass screw, it marked quarter, half, and full degrees of elevation. At a single point on the base of the scale, just above the bulb, a horizontal pin was loosely fastened, allowing the ends of the hausse to swing freely to the left or right. The ends of the pin rested in the arms of a bracket bolted to the rear of the breech, which permitted the hausse to sway back and forth. Because the pendulum hausse could pivot in four directions, it always remained vertical whenever the howitzer was on rough or uneven ground, terrain artillery crews frequently encountered on the mountains and prairies of the West. This allowed distortion-free sighting, for if the sight was rotated away from the vertical (a fault of older, fixed sights) it would show a lesser elevation than was set on the scale. (7)

For our example, the gunner set the slide at 5°. He then peered through a hole in the slide, in line with the small cast iron sight on the end of the muzzle, toward the target. As needed, he raised or lowered the howitzer with the elevation screw (located on the trail, beneath the breech), until he could see the target lined up in the sights. To move the piece laterally, the gunner gripped the handspike and tugged it to the left or the right. The mountain howitzer was then said to be at 5° elevation. Before the soldiers fired the weapon the gunner removed the hausse from its cradle, presumably to keep it from being thrown off and damaged during recoil. (8)

Without a doubt, sighting the howitzer consumed the greatest proportion of time in the whole firing process, and was the most complex part. To be as accurate as possible the gunner had to take into account and make adjustments for such conditions as wind, and the known error--perhaps caused by a worn bore--of his particular cannon. Night or thick fog made sighting impractical. Also, if the target was hidden aiming was a matter of guesswork. And it was very difficult, if not impossible, to hit a moving target. If his weapon had a defect which caused inaccurate projectile flight, such as the worn bore mentioned above, it meant that the Table of Ranges would not correspond exactly to the capability of the piece. In this situation the gunner could depend on the table only as a general guide--ultimately he determined the range by sending off one or two trial shots and then observing how close they came to the target. (9)

2) Cutting the Fuze During the 1860s several nations--including Britain, France, Germany, Belgium, Russia, and the United States--manufactured a wide array of fuzes for artillery projectiles. Colonel John Gibbon, in the Artillerist's Manual (1862), identified eighteen different models. Of these, there were two basic types; those that burned for a set time (usually seconds) or distance, before igniting the powder within the projectile, and those that exploded the charge upon impact with the target. The United States Army most often fitted smooth-bore projectiles, including those fired from mountain howitzers, with a timing mechanism called the Bormann, or "five-second" fuze. (10)

A Belgian Army captain named Bormann (or "Boarmann," according to Gibbon) invented the device about 1840. Over the following twenty years Belgium's Army experimented with and improved his creation. Meanwhile, the United States adopted the fuze for use in its own military forces. (11)

Made of a mixture with equal parts of tin and lead, the Bormann was cylindrical in shape, 1.65 inches in diameter and .45 inches thick. (see illustration) At a Federal armory, long before battle, it was screwed into the fuze hole (the opening that led into the hollow projectile, which was filled with a powder charge, and sometimes .69 caliber shot). Beneath a semi-circle of time markings (in full and half seconds, 0 to 5½ seconds) on top of the fuze, lay a horizontal strip of powder. To set the fuze, a cannoneer gripped a fuze-cutter or some other sharp instrument and pierced the fuze at the desired graduation, which exposed the powder to the flame of discharge when the cannon was fired. A threaded iron plug just beneath the fuze prevented the force of ignition and discharge from driving the soft metal fuze into the projectile. The train burned in two directions. Past the 5½ second mark it stopped dead, but at the zero end the burning train of powder connected with a cylindrical shaft filled with more powder. This "booster" charge flashed down, through a hole in an iron plug, and into the main bursting charge within the core of the projectile, which then exploded. (12)

American artillerists considered the Bormann fuze the most reliable (free of malfunction) and safe of the various fuzes then available. Gibbon called it "by far the best and most regular of any now in use." The powder in older, more inefficient fuzes was layered vertically and the fuze cut off at the desired length, corresponding to time. The different layers often did not burn at a uniform rate. The compressed powder in the horizontal train of the Bormann, however, burned uniformly, so more often than not a projectile exploded when a gunner expected. Still, according to one historian (Jack Coggins) the Bormann worked only seventy five percent of the time. Importantly, the Bormann was safer than other models for storage and handling because the powder never had contact with air until the fuze was cut open. (13)

When the gunner gave the command "load," #4 reached into the ammunition chest and lifted out whatever projectile he was ordered: shell, spherical case, or cannister. If shell or case, the gunner again consulted the Table of Ranges and told #4 to set, or "cut," the fuze at the required number of seconds. If the target was about 1000 yards distant, he cut the fuze at 3½ seconds. With the mountain howitzer raised to 5° elevation and sighted, and the fuze set at 3½ seconds, the projectile theoretically would burst when it reached the target. After he prepared the fuze, #4 handed the projectile to #5. (14)

2) Cutting the Fuze During the 1860s several nations--including Britain, France, Germany, Belgium, Russia, and the United States--manufactured a wide array of fuzes for artillery projectiles. Colonel John Gibbon, in the Artillerist's Manual (1862), identified eighteen different models. Of these, there were two basic types; those that burned for a set time (usually seconds) or distance, before igniting the powder within the projectile, and those that exploded the charge upon impact with the target. The United States Army most often fitted smoothbore projectiles, including those fired from mountain howitzers, with a timing mechanism called the Bormann, or "five-second" fuze. (10)

A Belgian Army captain named Bormann (or "Boarmann," according to Gibbon) invented the device about 1840. Over the following twenty years Belgium's Army experimented with and improved his creation. Meanwhile, the United States adopted the fuze for use in its own military forces. (11)

Made of a mixture with equal parts of tin and lead, the Bormann was cylindrical in shape, 1.65 inches in diameter and .45 inches thick. (see illustration) At a Federal armory, long before battle, it was screwed into the fuze hole (the opening that led into the hollow projectile, which was filled with a powder charge, and sometimes .69 caliber shot). Beneath a semi-circle of time markings (in full and half seconds, 0 to 5½ seconds) on top of the fuze, lay a horizontal strip of powder. To set the fuze, a cannoneer gripped a fuze-cutter or some other sharp instrument and pierced the fuze at the desired graduation, which exposed the powder to the flame of discharge when the cannon was fired. A threaded iron plug just beneath the fuze prevented the force of ignition and discharge from driving the soft metal fuze into the projectile. The train burned in two directions. Past the 5½ second mark it stopped dead, but at the zero end the burning train of powder connected with a cylindrical shaft filled with more powder. This "booster" charge flashed down, through a hole in an iron plug, and into the main bursting charge within the core of the projectile, which then exploded. (12)

American artillerists considered the Bormann fuze the most reliable (free of malfunction) and safe of the various fuzes then available. Gibbon called it "by far the best and most regular of any now in use." The powder in older, more inefficient fuzes was layered vertically and the fuze cut off at the desired length, corresponding to time. The different layers often did not burn at a uniform rate. The compressed powder in the horizontal train of the Bormann, however, burned uniformly, so more often than not a projectile exploded when a gunner expected. Still, according to one historian (Jack Coggins) the Bormann worked only seventy five percent of the time. Importantly, the Bormann was safer than other models for storage and handling because the powder never had contact with air until the fuze was cut open. (13)

When the gunner gave the command "load," #4 reached into the ammunition chest and lifted out whatever projectile he was ordered: shell, spherical case, or cannister. If shell or case, the gunner again consulted the Table of Ranges and told #4 to set, or "cut," the fuze at the required number of seconds. If the target was about 1000 yards distant, he cut the fuze at 3½ seconds. With the mountain howitzer raised to 5° elevation and sighted, and the fuze set at 3½ seconds, the projectile theoretically would burst when it reached the target. After he prepared the fuze, #4 handed the projectile to #5. (14)

3) Loading #5 then carried the round to the front of the howitzer and inserted it into the barrel. (Note: Each round consisted of a projectile, strapped or otherwise affixed to a cylindrical wooden block, or sabot, behind which was attached a canvas bag filled with about a one-half pound charge of powder. The end of the projectile with powder bag went into the bore first.) At the same time, #2 went to the ammunition chest and received the next round, from #4. #1, at the command "ram," lifted the rammer and pushed the round to the end of the bore, into the firing chamber. (15)

4) The Priming Wire The gunner then inserted the priming wire (a length of wire with a sharp point) into the vent hole of the barrel and pricked open the canvas powder bag. He gave the command "ready," and stepped to the side of the howitzer, to be clear of the recoil and to better observe the effect of the shot. (16)

5) The Friction Primer The friction primer consisted of two tubes and a serrated wire. One tube, ½ inch in length, intersected a longer 1 3/4 inch tube, which was filled with gunpowder and plugged with beeswax. The tubes were open to each other where they connected. The serrated wire passed through the small tube. A volatile mixture of two substances, sulphuret of antimony and chlorate of potassa, surrounded the wire inside the small tube, which was pinched shut at the open end around the tip of the wire. The other end of the wire was twisted into a loop. (17)

#3, at "ready," passed the hook of the lanyard through the loop and then inserted the friction primer into the vent hole. He stood clear of the weapon, outside the wheel, and at the command "fire!" he gave a "smart pull" on the lanyard. With this action the serrated wire scraped through the small tube and ignited the sulphuret of antimony/chlorate of potassa mixture, which in turn kindled the gunpowder in the long tube. (18)

6) Ignition A jet of flame shot down and fired the powder in the canvas bag. The resulting explosion propelled the projectile out of the bore and toward the target. (19)

The force of the explosion in the firing chamber also caused an opposite reaction, or "recoil," which pushed the howitzer backwards. According to Gibbon, the recoil of a mountain howitzer was eleven to twelve yards. This may have been due to the light weight of the weapon as compared to other cannon. Other factors, such as the nature of the ground on which the carriage rested, determined the severity of recoil. To limit recoil to about four yards the cannoneers could tie a short rope to one of the wheels, close to the ground, pass the rope over the trail of the carriage, and tie the other end to the second wheel. When the cannon was then fired, the rope caught the movement of the wheels and prevented the weapon from hurtling backwards. (20)

7) Projectile Flight As the projectile speeded toward the target, several factors determined the accuracy of its flight. If the powder behind it was inferior, range was diminished. A worn bore lessened velocity and caused the shot to deviate from a normal path, as did any excessive vibration of the howitzer or projectile. Air temperature and pressure also could produce imprecise fire. As a consequence of these factors, accuracy decreased the further the target. (21)

In certain situations the gunner or another commanding officer might order the crew to fire in a manner other than directly at the target. If the target was

close to the ground and perhaps concealed, a low-trajectory shot that bounded or ricocheted toword the target might be employed. (22)

8) Sponging and Thumbing the Vent After each round, at the command "sponge," #1 dipped the sponge head into the water bucket and then shoved it down the bore, to the rear of the chamber. This extinguished any embers of remaining powder and thread still burning inside, and prevented a premature explosion when the next round was loaded. (23)

While #1 sponged, the gunner "thumbed" the vent. He placed one of his thumbs, covered with a leather pad, or thumbstall, over the vent hole. This prevented the sponge from pushing a current of air up the hole and possibly lodging there any smoldering remains of the previous round. The gunner also thumbed the vent during the loading process. (24)

- - - - - - -

If the gunner had a well-trained crew, he could give the order to "commence firing," and the soldiers would proceed through the various steps of firing until ordered to stop. At the command "cease firing," the cannoneers halted and waited for further instructions. The gunner might re-aim, or perhaps tell his men to advance, retreat, or move to another position. Sometimes a crew had to move forward a distance so short that it was not worth the effort of hitching the weapon to a horse or mule. For that possibility, #1 and #2 wore special shoulder harnesses, called bricoles, which they attached to washerhooks located on both cheeks of the stock trail. The two men then pulled the cannon ahead, presumably while the other soldiers pushed. The cannoneers were also prepared to stop and fire while in retreat. To do this, they hitched the howitzer carriage behind the limber with the prolonge, a long hemp rope usually kept coiled between two hooks on top of the trail. Animals harnessed to the limber pulled the two vehicles. When the horses stopped the prolonge slackened, allowing the men to fire as normal. The prolonge also served as an all-purpose rope to help the crew in crossing ditches, righting upset vehicles, or perhaps easing a mountain howitzer down a steep slope. (25)

Mountain howitzers fired three types of projectiles: shell, spherical case, and cannister, but no solid shot. Shell consisted of a hollow, round iron ball filled with a powder charge and set off with the Bormann fuze. When it exploded, fragments scattered outward. When fired over hard, level ground, the maximum range of the mountain howitzer with shell could reach 1200 yards after three or four ricochets. Spherical Case or Shrapnel (named for Lieutenant Henry Shrapnel of the British Army who invented it in 1784) was similar, except that it had a thinner wall and contained seventy eight .69 caliber lead balls. Maximum range for spherical case was about 800 yards. Cannister was a cylinder of thin sheet metal filled with 148 balls, also .69 caliber. When fired from the howitzer, the cannister broke apart and the contents sprayed from the barrel like a huge shotgun. Artillerists used cannister at close range, at about 250 yards. Each ammunition chest contained six rounds of shell, and one each of spherical case and cannister. (26)

Bursting charges were relatively light compared to modern projectiles. When a shell exploded it usually broke into a few large pieces which scattered at low velocity. But if a shell or spherical case shot reached its mark it caused terrific destruction. The noise and force of explosion alone resulted in con-

siderable anxiety and fright. Artillerists called this terror "moral effect." (27)

Cannoneers could transport a mountain howitzer in either of three ways. 1) The first involved dismantling the howitzer and carriage and loading the different parts on muleback. The Army chose mules for their sure-footedness in rough or mountainous country. Specially-designed packsaddles stabilized the loads. One mule carried the barrel and harness shafts (250 pounds), another the trail, axletree, wheels, and implements (287 pounds), and the third toted two ammunition chests (224 pounds). Harness and saddle for each animal weighed forty seven pounds. To remove the barrel from the carriage and place it on the mule's back, #1 stuck the rammer down the bore, while #2 and #3 each held one end of the handspike and passed the loop (a 15" ring of rope strung through a hole in the middle of the handspike--the Big Hole specimen does not have this feature because it belongs with a prarie carriage, a vehicle cannoneers usually did not take apart) over the neck of the cascable. All lifted in unison and set the piece in the saddle. The gunner, #4 and #5 loaded the carriage. The men then securely lashed the parts in place with rope. While marching, one cannoneer led each mule. According to Gibbon, if the unit was attacked while travelling "a minute is sufficient, with well-drilled cannoneers, to unload, place in battery, and fire one round." It seems improbable, however, that even the most efficient crew could have accomplished the task so quickly. (28)

2) Mules can carry 250 to 300 pound loads twenty miles a day. An animal can pull seven times as much as it can pack, so for the second option soldiers attached two shafts to the trail so that a mule harnessed to them could draw the wheeled carriage. Another animal carried the ammunition chests. 3) Finally, soldiers could hitch the modified prairie carriage to the rear of the limber, upon which rested two ammunition chests. Anywhere from two to six animals, possibly either mules or horses, pulled the vehicles. (29)

Howitzer units were bunched in groups of six when fighting together, an unlikely event in the Far West. The six cannon and associated mules, carriages, limbers, thirty six soldiers, trumpeter and eleven officers were together called a "battery." (30)

Like other soldiers in the frontier Army, artillery crews faced a hard and dangerous existence while on campaign. Travel was arduous. Usually the men walked next to their weapon, and like the infantry probably experienced a great deal of footweariness. Or, they may have sat on the ammunition chests, a bone-jarring ride considering the uncushioned wheels and axles of the limber. When trekking, artillery and other wheeled vehicles usually followed the infantry and cavalry, who no doubt sometimes stirred up large clouds of choking dust. Furthermore, cannoneers shared in laborious "pioneer" duty, working in advance of the main column to build bridges and smooth a route for wheeled transportation. To help them in their work soldiers carried shovels and pickaxes for digging, and axes for felling trees. Finally, inadequate training worsened the frontier cannoneer's situation. Most of them were infantrymen pressed into artillery service. (31)

Battle, of course, was the most strenuous and hazardous condition the artillery crew encountered. In order to sight and fire their cannon the soldiers needed an unobstructed, direct view of the target. This, however, exposed them to enemy fire, especially from accurate rifles. Stepping in front of a cannon in order to load it through the muzzle also put cannoneers in an unprotected, vulnerable position. The capture of the mountain howitzer at the Big Hole fight

was a good example of how unsafe a lone artillery piece could be. The manual Instruction for Mountain Artillery gives directions for operation of the mountain howitzer with less than the normal number of soldiers, down to as few as two men. If conditions forced cannoneers to flee their posts they could "spike" a howitzer by driving a nail or some other piece of iron into the vent hole, breaking it off flush on the outside and crimping it inside the bore with the rammer, rendering the weapon unusable to an enemy. The men could also employ various means for plugging or destroying the barrel. (32)

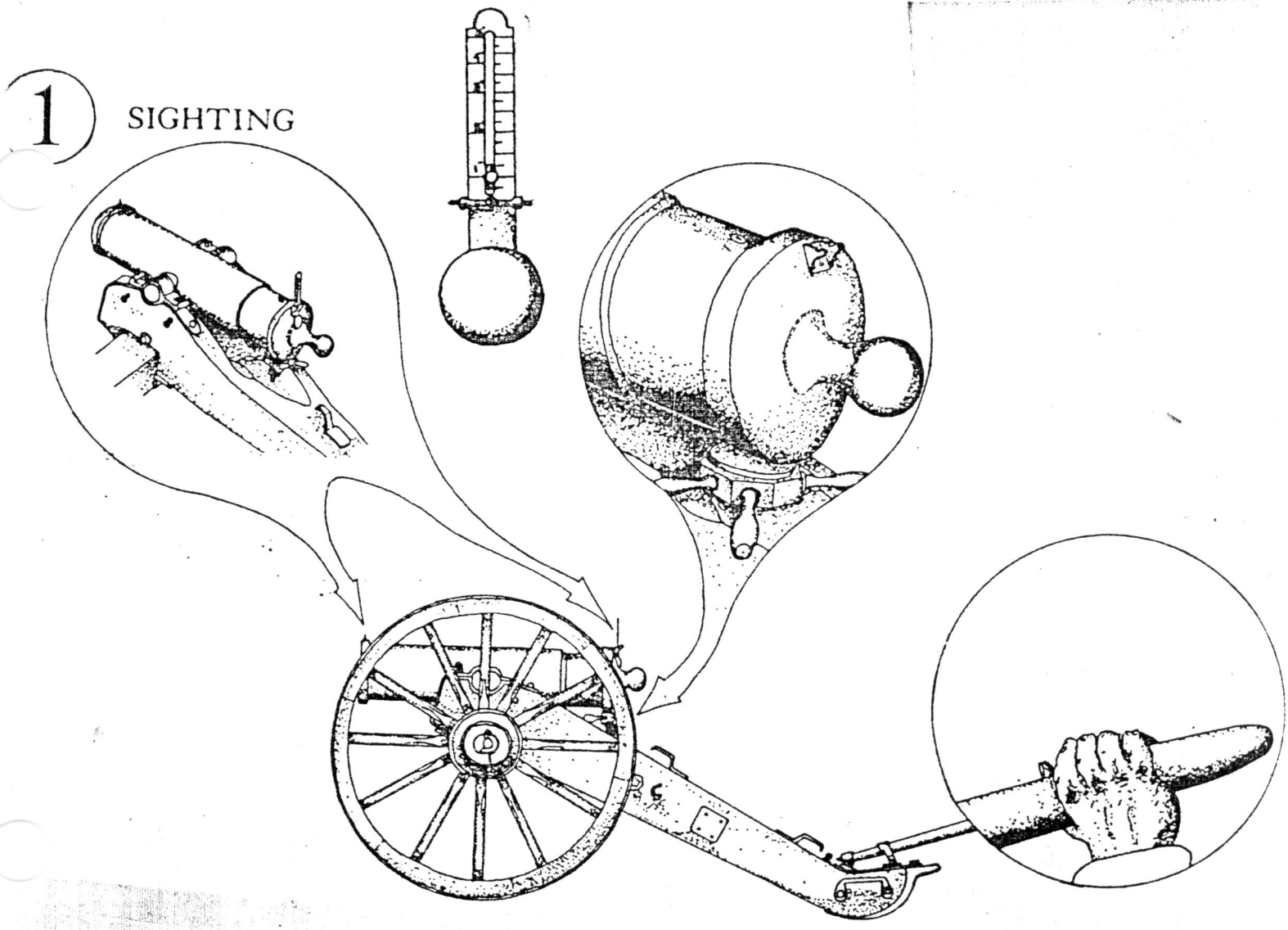

TABLE of RANGES

Elevation	SHELL	Time	SPH'L CASE	Time
0°	170 Yards		150 Yards	
1°	300 "			
2°	390 "			
2°30'	500 "	2 Sec's	450 "	2 Sec's
3°	635 "		500 "	
4°	785 "	3 "	700 "	2.75 "
5°	1005 "		800 "	3 "

Maximum range of Canister: 250 Yards

Kermit Edmonds

2 CUTTING THE FUZE

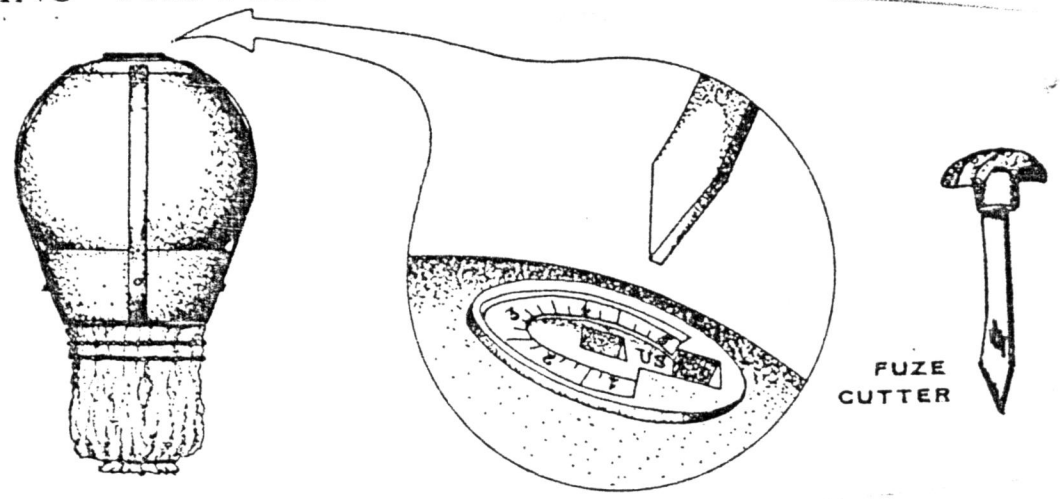

FIXED ROUND of SPHERICAL CASE SHOT or SHELL

(Exploded View)

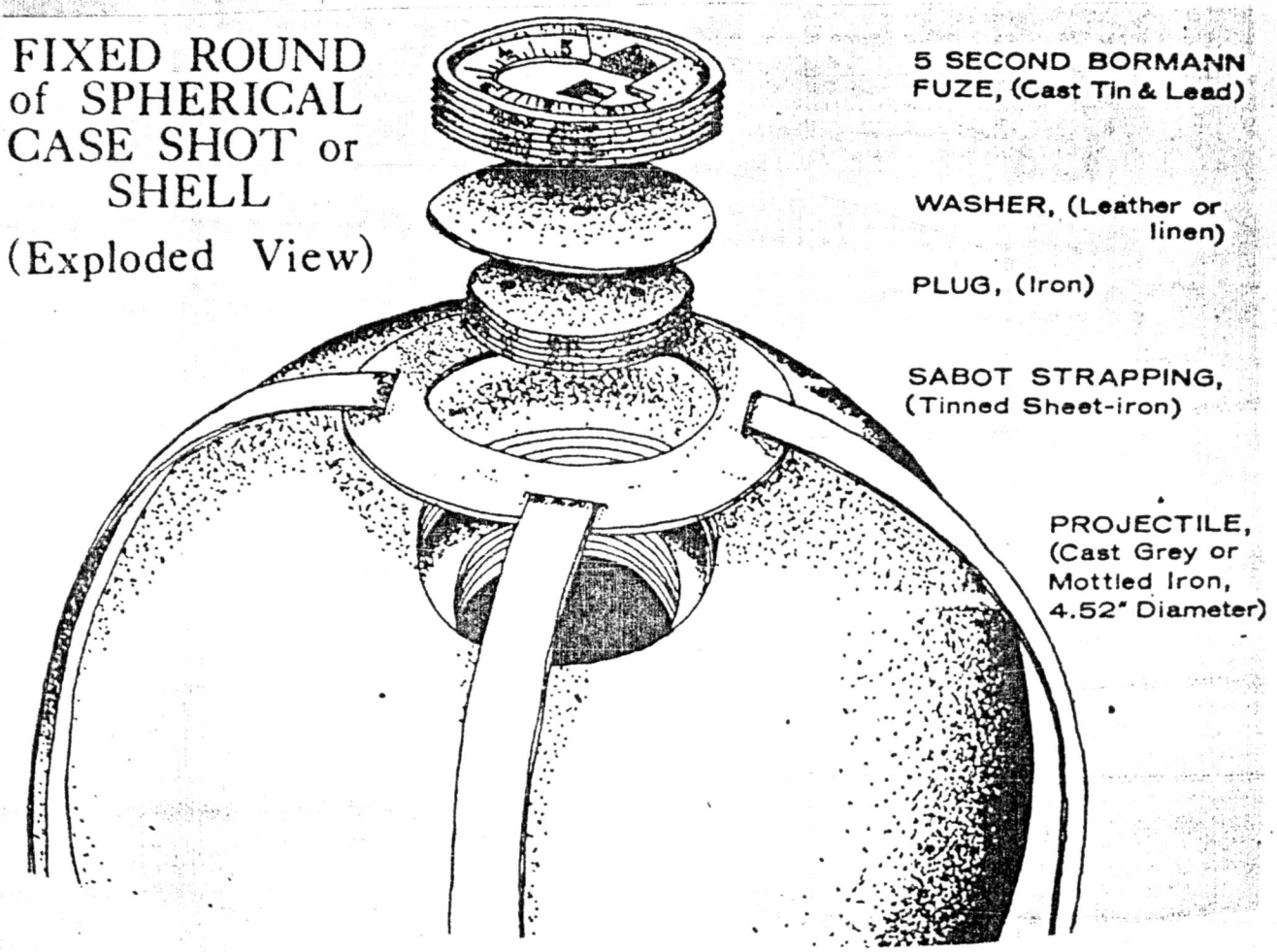

Kermit Edmonds

3 LOADING

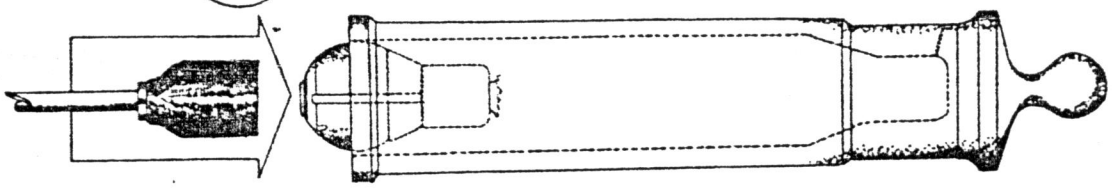

4 THE PRIMING WIRE

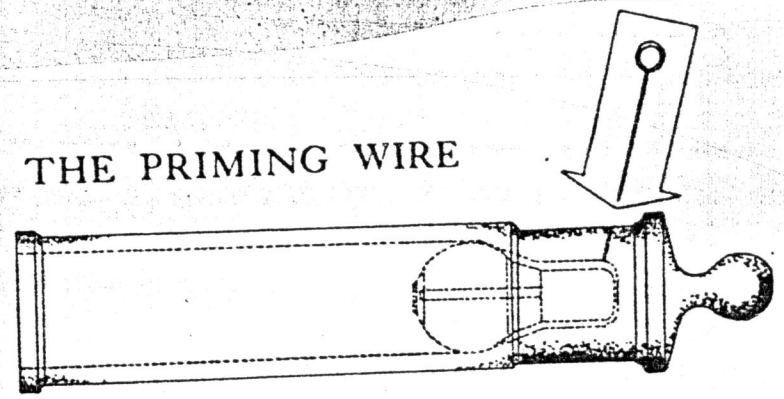

THE FRICTION PRIMER 5

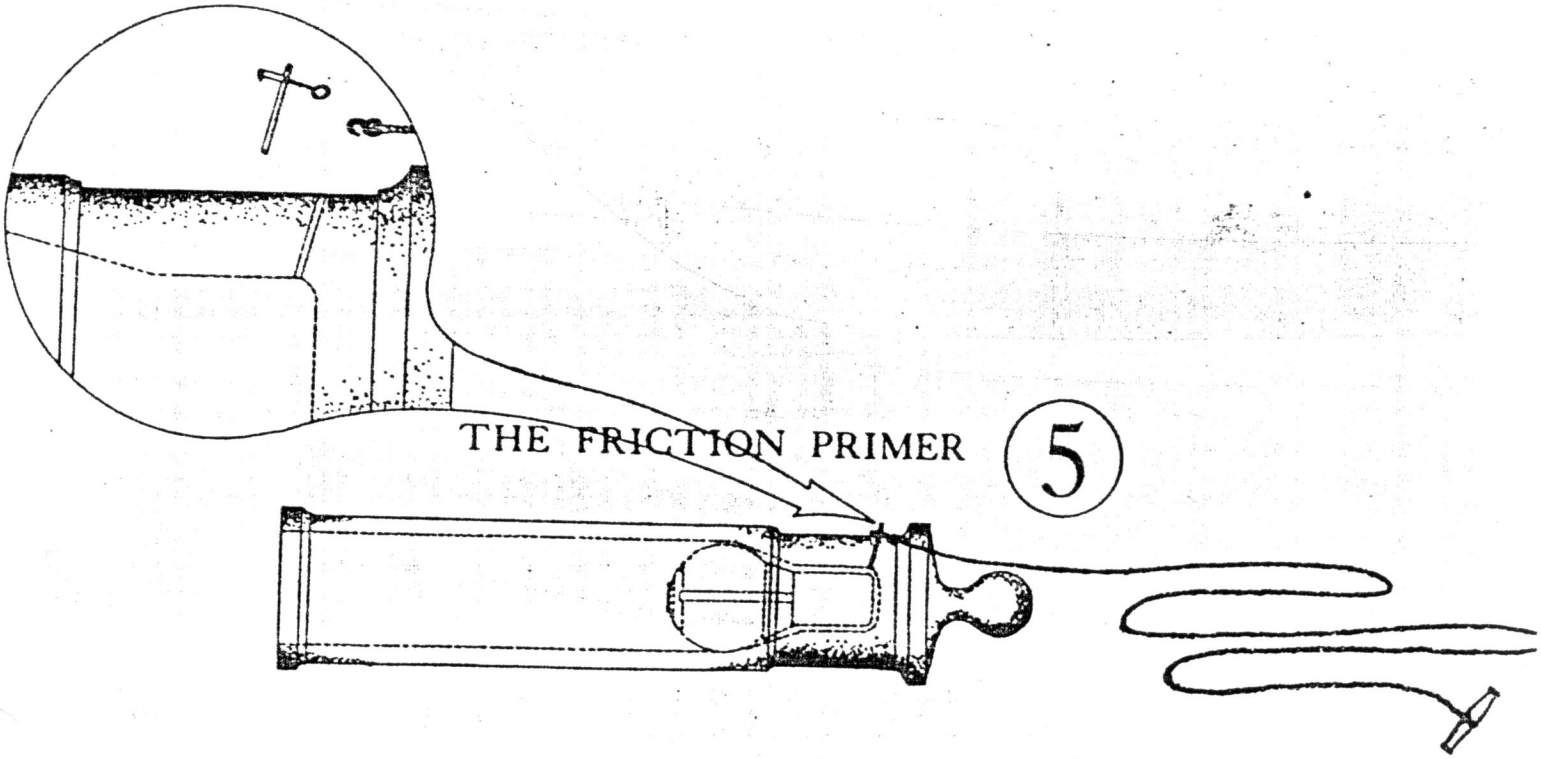

Kermit Edmonds

IGNITION 6

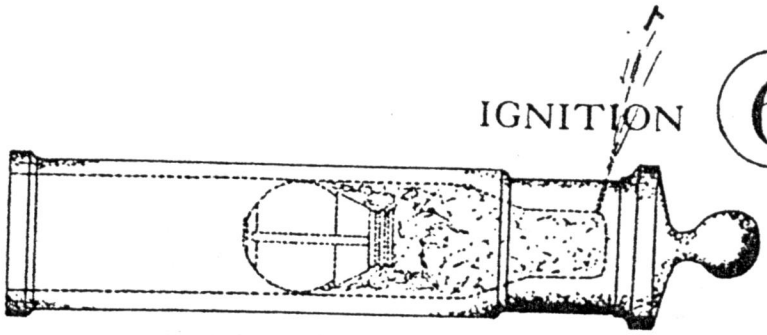

PROJECTILE FLIGHT 7

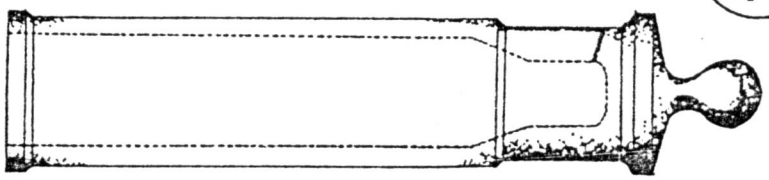

SPONGING AND THUMBING THE VENT 8

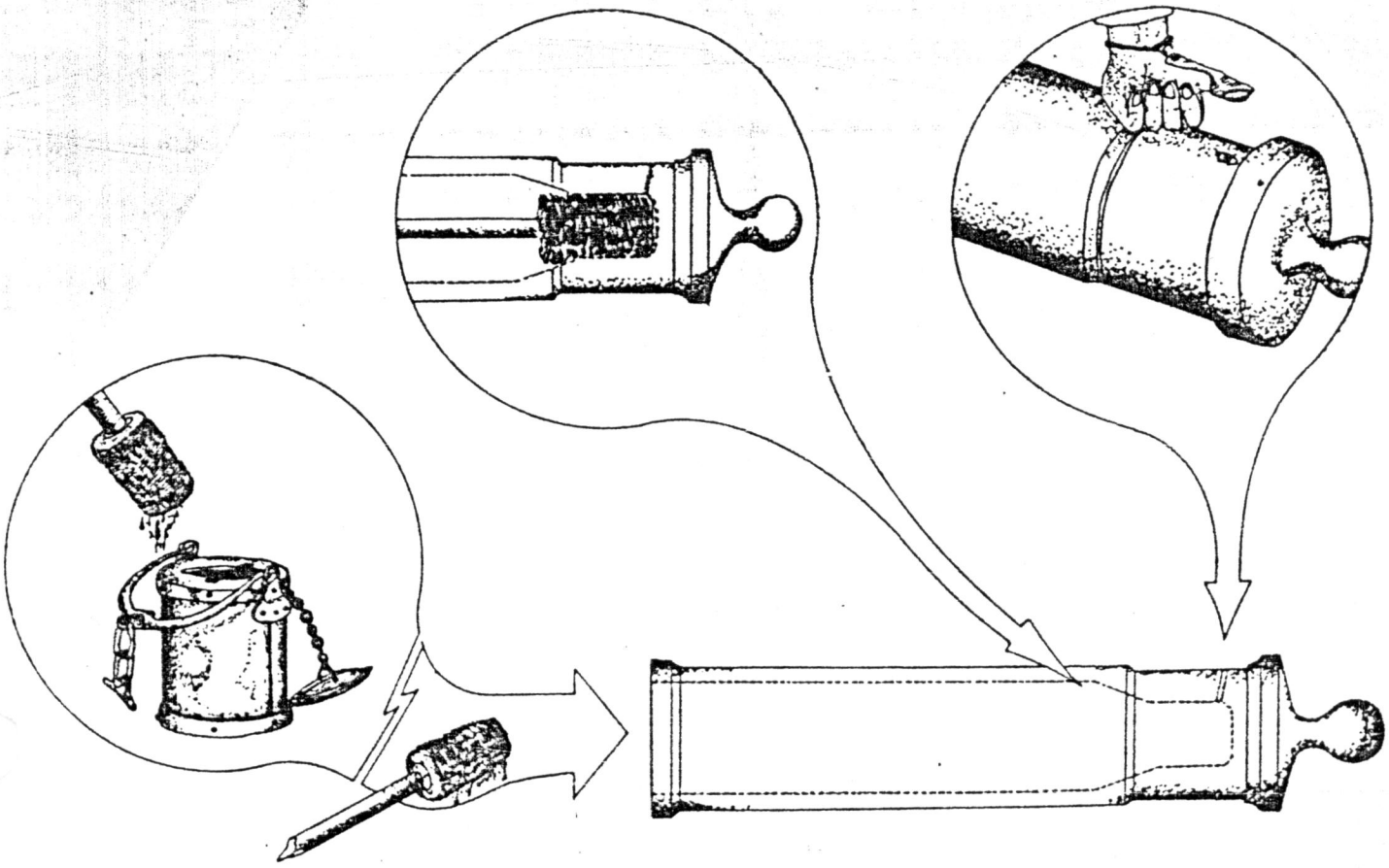

Kermit Edmonds

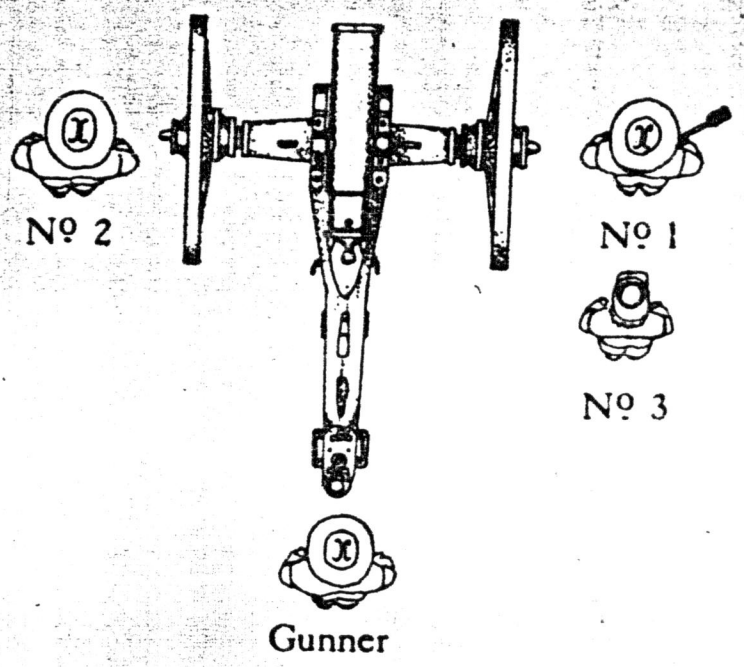

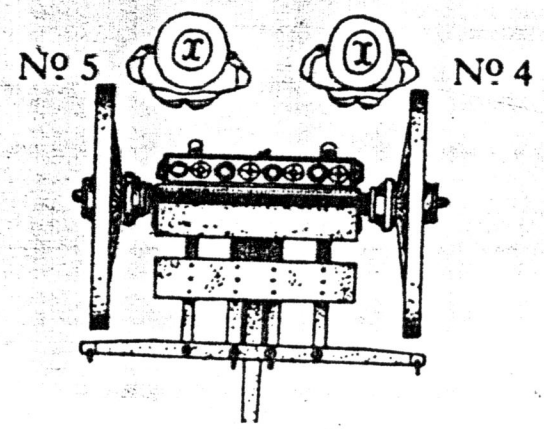

Kermit Edmonds

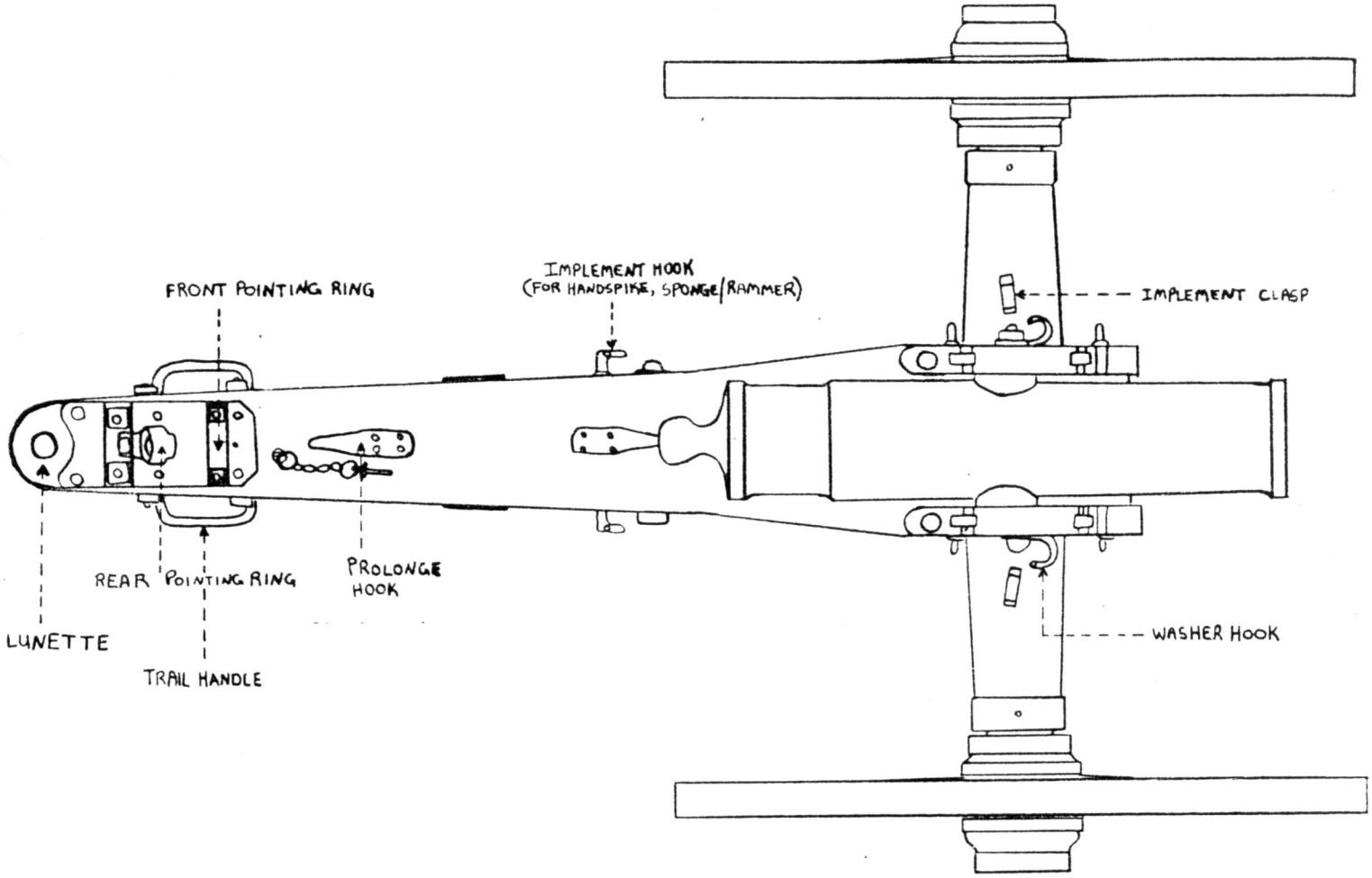

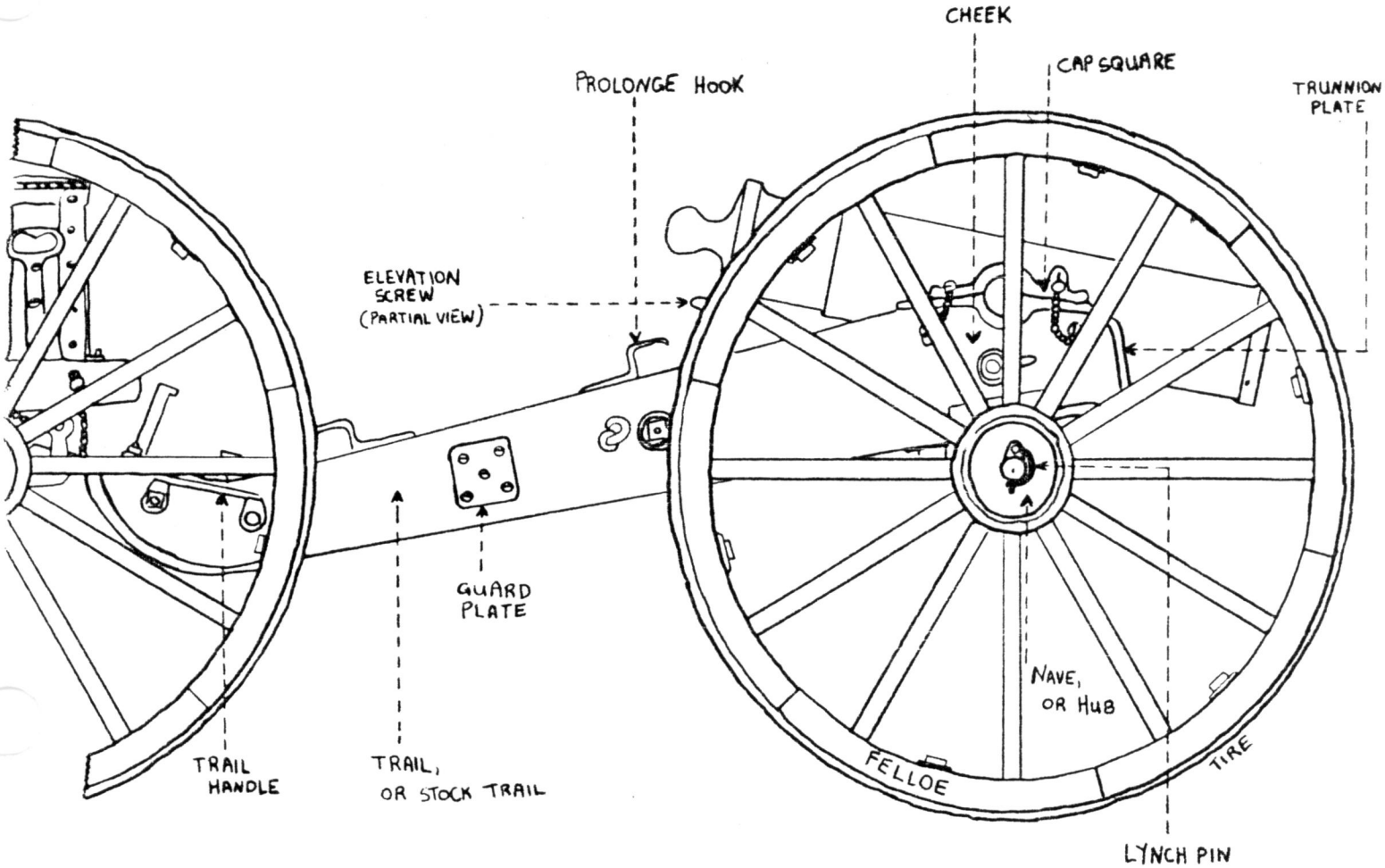

BIG HOLE NATIONAL BATTLEFIELD

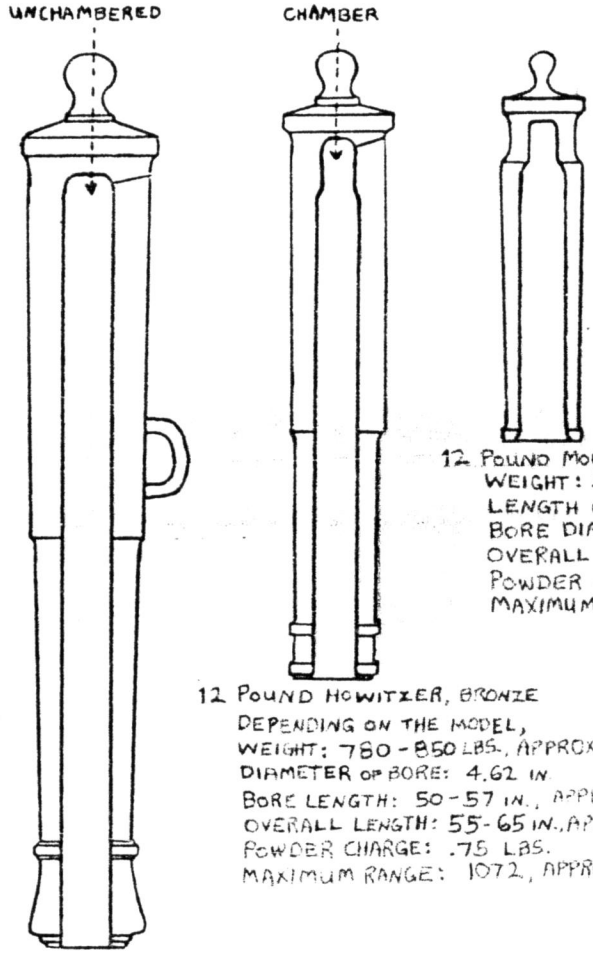

ALL THREE HAD THE SAME SIZE BORE (4.62), AND FIRED THE SAME SIZE OF PROJECTILE.

12 POUND MOUNTAIN HOWITZER, BRONZE
WEIGHT: 220 LBS., APPROX.
LENGTH OF BORE: 30.91 IN.
BORE DIAMETER: 4.62 IN.
OVERALL LENGTH: 37.21 IN.
POWDER CHARGE: .5 LBS.
MAXIMUM RANGE: 1005 YARDS

12 POUND HOWITZER, BRONZE
DEPENDING ON THE MODEL,
WEIGHT: 780-850 LBS., APPROX.
DIAMETER OF BORE: 4.62 IN.
BORE LENGTH: 50-57 IN., APPROX.
OVERALL LENGTH: 55-65 IN., APPROX.
POWDER CHARGE: .75 LBS.
MAXIMUM RANGE: 1072, APPROX.

SCALE 1:18

12 POUND FIELD GUN, BRONZE
DEPENDING ON THE MODEL,
WEIGHT: 1200-1800 LBS., APPROX.
DIAMETER OF BORE: 4.62 IN.
BORE LENGTH: 62-74 IN., APPROX.
OVERALL LENGTH: 72-85 IN., APPROX.
POWDER CHARGE: 2-2.5 LBS.
MAXIMUM RANGE: 1600-1700 YARDS, APPROX.

SOURCE: GIBBON, ARTILLERIST'S MANUAL; RIPLEY, ARMS AND AMMUNITION OF THE CIVIL WAR

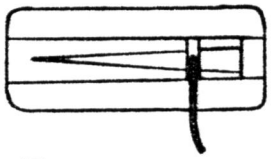

STADIA

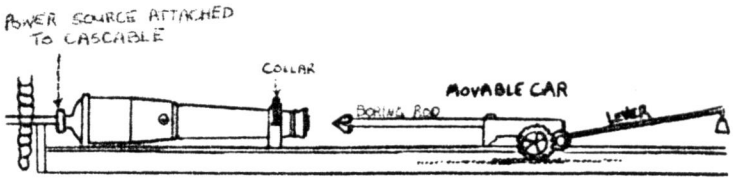

METHOD OF BORING A CANNON

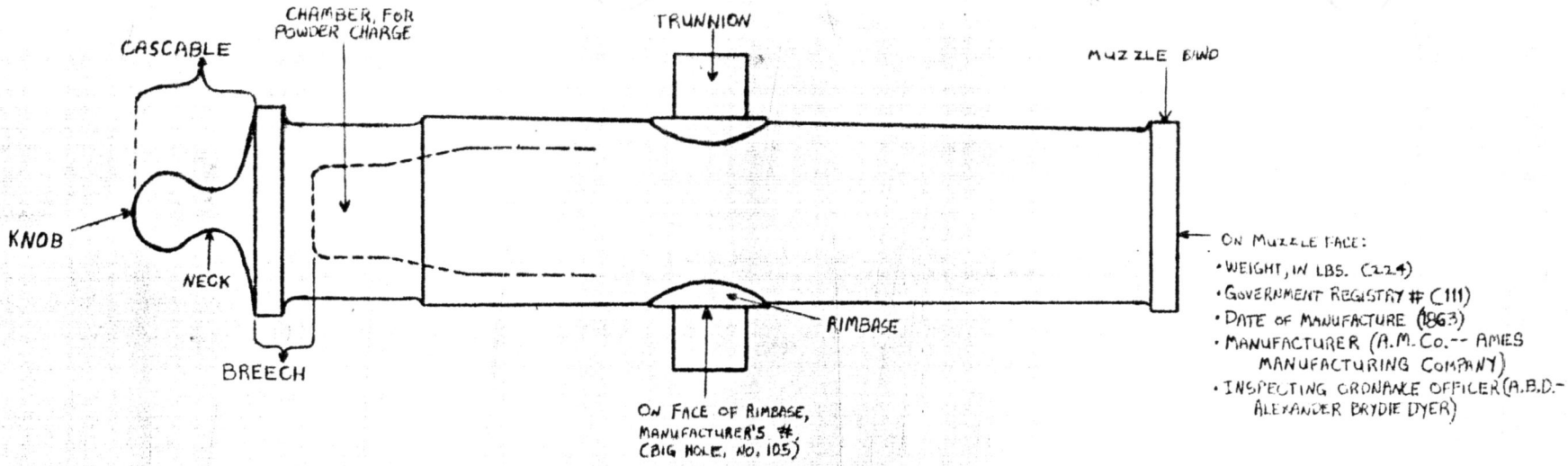

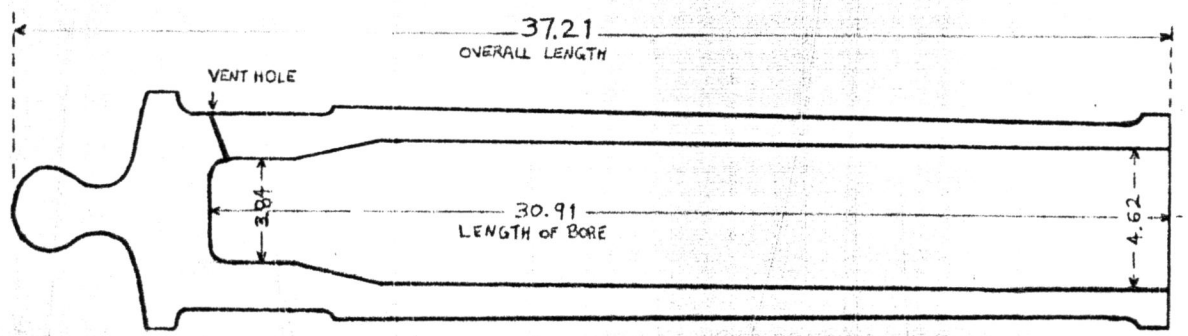

WEIGHT: APPROX. 220 LBS.
BIG HOLE MODEL, (224)
W/ PRAIRIE CARRIAGE, NO IMPLEMENTS, (363).
TOTAL: 587 LBS., APPROX.

SCALE: ½ SIZE

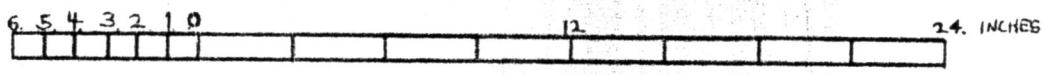

12 POUND BRONZE MOUNTAIN HOWITZER, MODEL 1841

SOURCE: ALFRED MORDECAI, ARTILLERY FOR THE UNITED STATES LAND SERVICE, PART 1, PLATE 8; ORDNANCE MANUAL FOR THE USE OF THE OFFICERS OF THE UNITED STATES ARMY

NOTES

In order to reduce their number in the text, all footnotes are condensed into one number at the end of each.paragraph. Information taken from the Carl P. Russell papars is first listed as "Carl.P. Russell," followed by the citation exactly as Russell wrote it down.

THE MODEL 1841 BRONZE TWELVE POUND MOUNTAIN HOWITZER

1) Robert Greenaugh Albion, Introduction to Military History, (New York: Appleton-Century-Crofts, Inc., 1929), pp. 34-35.

2) John Gibbon, The Artillerist's Manual (New York: Van Nostrand Reinhold, 1860), pp. 58-59.

3) Board of Army Officers, Instruction for Mountain Artillery (Washington: Gideon and Co., Printers, 1851), p. 22; Gibbon, p. 109.

4) Gibbon, pp. 54-56; Edwing Tunis, "Weapons of the Civil War -- Artillery: 1. Smoothbores, 2. Rifled Cannon," Popular Science (June 1961): 52.

5) Board of Army Officers, p. 34; Gibbon, p. 65.

HISTORY OF THE MOUNTAIN HOWITZER

1) William E. Birkhimer, Historical Sketch of the Organization, Administration, Materiel, and Tactics of the United States Army.(James J. Chapman, 1884; reprint ed., New York: Greenwood Press, 1968), p. 282.; James C. Hazlett and Edwin Olmstead and M. Hume Parks, Field Artillery Weapons of the Civil War (Newark: University of Delaware Press, 1983), p. 134; Carl P. Russell, Guns on the Early Frontier: A History of Firearms from Colonial Times Through the Years of the Fur Trade.(Berkeley: University of California Press, 1957), p. 269; Carl P. Russell, papers, "27th CONG. 2nd SESSION H.R. DOCUMENT 194, pp. 1-4."

2) Birkhimer, p. 282; Hazlett, p. 134; Russell, pp. 268 - 278.

3) Birkhimer, pp. 117, 306; Hazlett, pp. 135-136, 294; Warren Ripley, Artillery and Ammunition of the Civil War (New York: Van Nostrand Reinhold, 1970), p. 87, Carl P. Russell, papers, "RECORD GROUP 135, CONTRACTS, C. ALGER AND CO.," "BENET 1880 p. 148."

4) Hazlett, pp. 136-138.

5) Hazlett, pp. 134, 136-138; John D. Imboden, "Jackson's Foot Cavalry," in Ned Bradford, ed., Battles and Leaders of the Civil War (New York: Appleton-Century-Crofts, Inc., 1956), p. 193.

6) Mark Brown, The Flight of the Nez Perce (New York: G.B. Putnam's Sons, 1967; reprint ed., Lincoln: University of Nebraska Press, 1982), pp. 257-258.

7) Russell, pp. 268-278; Carl P. Russell, papers, ' "MURRAY, RICHARD Y. 1961 "Apache Pass." CORRAL DUST, JUNE, pp. 17-19, 24;" "Off. Records Ser. 1, IX, 601 (Surgeon McNulty Oct. 1863);" "Downey 1963 pp. 226-231;" "Downey '63

p. 224. Source: J.P. Dunn Massacres in the Mountains NY 1886."'

THE MOUNTAIN HOWITZER CARRIAGE

1) Ripley, p. 199; Carl P. Russel, papers, '"R.G. 156 ORDNANCE SPECIAL FILES, EXPERIMENTS, CLASS 2, 1-69, 1828-1870, NATIONAL ARCHIVES;" "Statement of G. Talcott, BREVET BRIGADIER GENERAL, COLONEL OF ORDNANCE, 7 MAY 1850, ATTACHED to 'R. Jones, ADJUTANT GENERAL, WASHINGTON, TO MAJOR GENERAL WINFIELD SCOTT, GENERAL-IN-CHIEF, NEW YORK, MAY 22 1850. R.G. 94, AGO LB No. 27, p. 123, NATIONAL ARCHIVES."'

2) Carl P. Russell, papers, "To H.K. Craig from Maj. J. Symington 2/10 1855;" "Copy from the National Archives Record Group no. 156 Ord. Off. Special files, Repts. of Ord. Boards, Box 25, Ex-2-121."

MANUFACTURE OF ARTILLERY

1) Allen Johnson, Dictionary of American Biography, vol. 1 (New York: Charles Scribner's Sons, 1964), pp. 248-250; Merrit Roe Smith, Harper's Ferry Armory and the New Technology: The Challenge of Change (Ithaca: Cornell University Press, 1977), pp. 288-290.

2) Johnson, pp. 248-250; Carl P. Russell, papers, "Benet, pp. 511-512."

3) Ibid.

4) Johnson, p. 248.

5) Gibbon, pp. 70-73.

6) Ibid., pp. 73-75.

7) Brevet Major T.T.S. Laidley, et. al., The Ordnance Manual for the Use of the Officers of the United States Army, (J.B. Lippincott and Co., 1861; reprint ed., Ordnance Park, 1970), pp. 25-31.

8) Laidley, pp. 25-31; Ripley, pp. 245,276.

9) Kermit Edmonds, "Historian's Report: The Mountain Howitzer, Prairie Carriage, and Limber;" Big Hole National Battlefield, Accession File, Folder 01. (Ownership and Historical Data); photocopy of memorandum of receipts in Big Hole National Battlefield, Accession File, Folder 01. (Ownership and Historical Data); Samuel Reznick, Profiles Out of the Past of Troy, New York, Since 1798 (Troy, New York: 1970), p. 81; A.J. Weise, Troy and Vicinity (Troy: William H. Young, 1886), p. 53; Laidley , pp. 176; 405; "Fort Shaw, 14 June 1877, Report of the Adjutant General, Department of the Dakota, Inventory of Ordnance Stores, 31 May 1877," copy in Big Hole National Battlefield, Accession File, Folder 01.(Ownership and Historical Data); Letter, Alfred A. Schulmeyer, Superintendent, Big Hole National Battlefield, to Edwin Olmstead, artillery historian, 20 July 1980; Letter, Olmstead to Schulmeyer, 15 August, 1980; both in Big Hole National Battlefield File, Folder, "Howitzers and Artillery: General Research Data."

10) Board of Army Officers, p. 40; Gibbon, pp. 170-175.

11) Laidley, pp. 176, 405-406.

THE MOUNTAIN HOWITZER AT BIG HOLE NATIONAL BATTLEFIELD

1) Letter, Nathan Hazen, Chief Clerk, War Department, Office of the Chief of of Ordnance, to L.V. McWhorter, 8 May 1924; Letter, Dale E. Floyd, Navy and Old Army Branch, Military Archives and Records Service, to Alfred Schulmeyer, Superintendent, Big Hole National Battlefield, 11 August 1977; both in Big Hole National Battlefield Files, Folder 01. (Ownership and Historical Data).

2) Letter, carbon copy, Alfred W. Schulmeyer, Superintendent, Big Hole National Battlefield, to Elane C. Everly, Chief, Old Army and Navy Branch, National Archives and Records Service, 12 June 1977; Memorandum, 19 September 1963, Herbert E. Kahler to Superintendent, Yellowstone National Park, "Report on research done at National Archives;" both in Big Hole National Battlefield Files, Folder 01. (Ownership and Historical Data).

3) Typed transcript of Colonel John Gibbon, "Report of Battle of Big Hole, M.T., August 9, 1877," dated Fort Shaw, Montana, 20 September 1877; Memorandum, 30 September 1963, Aubrey Haines, Park Historian, Yellowstone, to Acting Superintendent, Big Hole National Battlefield; letter, copy, unsigned to Mr. F.D. Brown, Missoula, Montana, 10 June 1916; clipping, Helena Journal, 9 November 1889; Letter, W.Y. Pemberton to L.V. McWhorter, 11 January 1918; all in Big Hole National Battlefield Files, Folder 01. (Ownership and Historical Data).

4) Kermit Edmonds, "Historian's Report: The Mountain Howitzer, Prairie Carriage, and Limber;" Letter, John B. Somers, Forest Supervisor, to Joseph M. Dixon, Governor, 25 January 1922; Letter, Joseph M. Dixon to John B. Somers, 30 January 1922; all in Big Hole National Battlefield Files, Folder 01. (Ownership and Historical Data).

OPERATION OF THE MOUNTAIN HOWITZER

1) Board of Army Officers, pp. 4-7, 19; Ripley, p. 228.

2) Gibbon, pp.251-253; Colonel W.S. Nye, "How CW Artillery Was Aimed," Civil War Times Illustrated 3, no. 5 (August 1964): 22-23.

3) Gibbon, p. 251; Nye, p. 23; Lt. Col. Emory Upton, et.al., United States Army Artillery Tactics, (New York: D. Appleton and Company, 1874), p. 514.

4) Gibbon, pp. 251-252.

5) Ibid., pp. 252-253.

6) Board of Army Officers, p. 36; Nye, p. 23.

7) Gibbon, pp. 325-327; Nye, pp. 24-25; Ripley, p. 230.

8) Nye, p. 22; Ripley, p. 230.

9) Encyclopaepdia Britannica, 15th ed., s.v., "Gunnery;" Gibbon, pp. 272-273.

10) Gibbon, Chapter IX, "Fuzes," pp. 277-323; Ripley, p. 276.

11) Gibbon, pp. 283, 285; Ripley, p. 276.

12) Ibid.

13) Gibbon, p. 283; Ripley, p. 276.

14) Board of Army Officers, pp. 6-7.

15) Ibid., p. 6.

16) Ibid., p. 4.

17) Gibbon, pp. 363-366; Laidley, p. 298; Ripley, p. 233.

18) Board of Army Officers, p. 7.

19) Ripley, p. 233.

20) Board of Army Officers, pp. 8-9; Gibbon, pp. 192, 272.

21) Gibbon, p. 257.

22) Ibid., pp. 254-255.

23) Board of Army Officers, pp. 5-6; Laidley, pp. 128-129.

24) Board of Army Officers, pp. 4-5; Gibbon, p.257.

25) Board of Army Officers, p. 10; Gibbon, p. 337.

26) Board of Army Officers, p. 33; Gibbon, p. 268; Laidley, pp. 34-35; Harold L. Peterson, Round Shot and Rammers: An Introduction to Muzzle-Loading Land Artillery in the United States.(New York: Bonanza Books, 1969), p. 80.

27) Jack Coggins, Arms and Equipment of the Civil War (Garden City, New York: Doubleday & Company, 1962), p. 62; Gibbon, p. 250.

28) Board of Army Officers, pp. 12-17; Gibbon, p. 410; Laidley, p. 154.

29) Board of Army Officers, pp. 12-17; Coggins, p. 75; Gibbon, pp. 192, 397; Ripley, p. 199.

30) Board of Army Officers, p. 19.

31) Board of Army Officers, p. 31; Laidley, pp. 130, 132, 135, 355, 357; Don Rickey, Jr., Forty Miles A Day On Beans and Hay: The Enlisted Soldier Fighting the Indian Wars.(Norman: University of Oklahoma Press, 1963; reprint ed., 1972), pp. 100, 219, 243.

32) Board of Army Officers, p. 8; Gibbon, pp. 85-86.

SOURCES

Albion, Robert Greenaugh. Introduction to Military History. New York: Appleton-Century-Crofts, Inc., 1929.

Big Hole National Battlefield Files

Accession File, Folder 01. (Ownership and Historical Data)
Folder, "Basic Facts: Use and Capture of the Mountain Howitzer"
Folder, "Howitzers and Artillery: General Research Data"

Birkhimer, William E. Historical Sketch of the Organization, Administration, Materiel, and Tactics of the United States Army. James J. Chapman, 1884; reprint ed., New York: Greenwood Press, 1968.

Board of Army Officers. Instruction for Mountain Artillery. Washington: Gideon and Co., Printers, 1851.

Brown, Mark. The Flight of the Nez Perce. New York: G.B. Putnam's Sons, 1967; reprint ed., Lincoln: University of Nebraska Press, 1982.

Coggins, Jack. Arms and Equipment of the Civil War. Garden City, New York: Doubleday and Co., 1962.

Encyclopaedia Britannica, 15th ed., S.v., "Gunnery."

Gibbon, John. The Artillerist's Manual. New York: Van Nostrand Reinhold, 1860.

Hazlett, James C. and Olmstead, Edwin and Parks, M. Hume. Field Artillery Weapons of the Civil War. Newark: University of Delaware Press, 1983.

Imboden, John D. "Jackson's Foot-Cavalry," in Bradford, Ned, ed. Battles and Leaders of the Civil War. New York: Appleton-Century-Crofts, Inc., 1956.

Johnson, Allen, ed. Dictionary of American Biography, vol. 1. New York: Charles Scribner's Sons, 1964.

Laidley, Brevet Major T.T.S., et. al. The Ordnance Manual for the Use of the Officers of the United States Army, J.B Lippincott and Co., 1861; reprint edition, Ordnance Park, 1970.

Nye, Colonel W.S. "How CW Artillery Was Aimed." Civil War Times Illustrated 3, no. 5 (August 1964): 22-25.

Peterson, Harold L. Round Shot and Rammers: An Introduction to Muzzle-Loading Land Artillery in the United States. New York: Bonanza Books, 1969.

Reznick, Samuel. Profiles Out of the Past of Troy, New York, Since 1798. Troy, New York: 1970.

Rickey, Don Jr. Forty Miles A Day On Beans and Hay: The Enlisted Soldier Fighting the Indian Wars. Norman: University of Oklahoma Press, 1963; reprint ed., 1972.

Ripley, Warren. Artillery and Ammunition of the Civil War. New York: Van Nostrand Reinhold, 1970.

Russell, Carl P. Guns on the Early Frontier: A History of Firearms from Colonial Times Through the Years of the Western Fur Trade. Berkeley: University of California Press, 1957.

_____. Papers, "Mountain Howitzer," I and II, xerox copies from Washington State University Manuscripts, Archives, and Special Collections.

Smith, Merrit Roe. Harper's Ferry Armory and the New Technology: The Challenge of Change. Ithaca: Cornell University Press, 1977.

Tunis, Edwin. "Weapons of the Civil War -- Artillery: 1. Smoothbores, 2. Rifled Cannon," Popular Science (June 1961): 52-55.

Upton, Lt. Col. Emory, et.al. United States Army Artillery Tactics. New York: D. Appleton and Company, 1874.

Weise, A.J. Troy and Vicinity. Troy: William H. Young, 1886.