NATIONAL PARK SERVICE

JANUARY 1967

NUMBER 4

Turn Your Solved Problems Into Cash! Get Paid For 'Em!

SAFETY SHIELD FOR HAND ROUTER (NPS SW 66-109)

There are safety hazards in using a hand router. The operator can inhale dust or be hit in the eyes, face, or body by flying

splinters of wood or hot metal chips. If he jerked when struck, he might further injure himself or someone nearby.

Signmaker William P. Mote, Grand Canyon National Park, designed and made the safety shield for use on hand routes shown in the photos. The device is made of clear plastic, 1/32" thick, in a sheet metal frame with sponge rubber for a cushion.

The simple shield is inexpensive, easy to make and install, and above all, it decreases the likelihood of health and accident hazards to the operator.

QUICK AND EASY SLIDE TITLES (NPS SW 66-82)

In a few minutes you can have a slide title by affixing Prestype letters directly on a 35mm transparency.

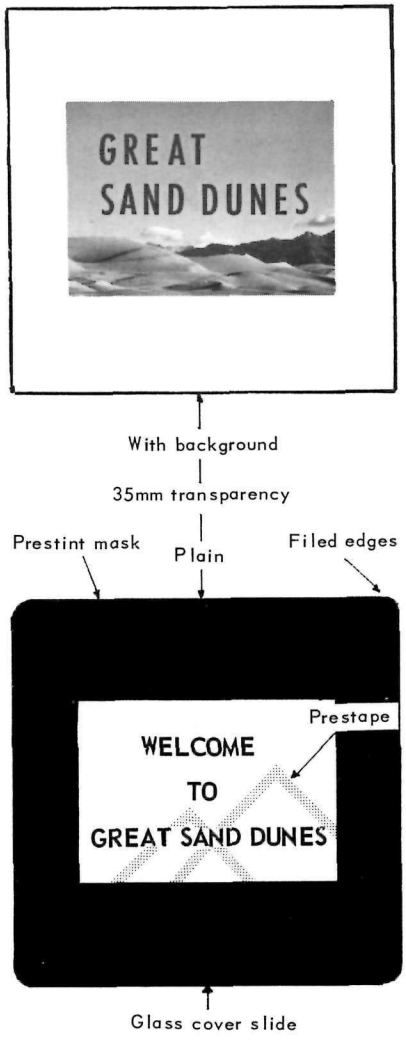

The old method of making a title slide by first making a poster, photographing it, and then waiting for the film to be processed and returned was time consuming, expensive, and didn't take care of the right-now needs. Now, title, sub-title, and special slides, such as "Welcome Kiwanians," can be made on the spot.

Warren H. Hill, Park Naturalist at Great Sand Dunes National Monument, whose suggestion this is, says that the materials are available under a GSA contract from several manufacturers. He has found 10 point size letters to be the most versatile.

If you want a plain background, use a glass cover slide (file the edges round so they won't catch in the machine), mask the proper size opening with opaque black Prestint, and apply the message. Warren sprayed one of the plain title slides with Krylon plastic spray to make it more durable; the plastic crinkled, and accidentally he had achieve a pleasing effect. Transparent color sheets may be used for color on plain title slides; Prestape for simple designs.

If you make a mistake when applying the letters, they can be removed without harming the film, merely by pressing masking tape gently on the letters and pulling them away.

The possibilities are numerous and Warren is pleased with the professional look the method gives to their amphitheater and visitor center programs.

PROTECTION FOR CAMERA EQUIPMENT (NPS MW 67-19)

Small steel ammunition boxes, if lined with polyurethane foam, make excellent carriers for camera equipment.

John A. Tyers, Chief Park Naturalist, Wind Cave National Park, says they are especially useful on such expeditions as cave crawls where photographers must push and pull camera equipment through confined areas.

FERTILIZING BY HELICOPTER
(NPS SER 65-117)

One of the main answers to the stablilization of the sand dunes at Cape Hatteras National Seashore is the propagation of grasses on the protective dunes and beach areas. For best results, studies show that grasses will do much better if fertilizer is applied in correct amounts and at the right times of the year. Research has shown best results from application of (30-10-0) amonium phosphate, 100 to 125 pounds per acre, four times a year, in March, April, June, and September. More than two thousand acres of land to be fertilized four times a year!

Before the spring of 1963, fertilizer was applied by two methods: mechanical spreaders drawn behind tractors where possible; hand application on the sand dunes and where equipment could not reach. These methods had many disadvantages: tractors and equipment did a lot of damage to the grasses and protective dunes; hand application was slow and not very uniform; fertilizer could not always be applied at the proper time of year due to slowness of the operation and weather conditions; and these methods were almost prohibitively expensive, costing an average of $7.50 per acre, or a staggering $63,000 a year, plus materials to cover the 2100 acres four times.

Airplanes were ruled out because the distance a plane had to go to pick up its load was time-consuming and costly, a state highway runs the entire length of the Outer Banks islands and is next to most of the area which needs fertilization, and there are dangerous power lines nearby.

Helicopters were selected for the job. They can put down 3000 pounds of fertilizer, covering 30 acres, per hour of flight time at a charge of $104.50 per hour. Application costs by the helicopter method are $2.44 per acre as contrasted with $7.50 per acre by the old methods. Annual savings on the operation amount to approximately $40,000.

The two employees responsible for working out this problem were Civil Engineer Jerry Eubanks, formerly at Cape Hatteras National Seashore and now at Shenandoah National Park, and General Supply Specialist Lawrence J. Hovig of Cape Hatteras.

PAD AND SUPPORT FOR LP GAS CYLINDERS
(NPS SW 66-34)

For about $10 you can make a simple pad support for LP Gas cylinders for trailer coaches. Glen Wohlbrandt, Plumber, and Tom Pearson, Plumber's Helper, at Lake Mead National Recreation Area, designed and constructed the one shown in the sketch and photos.

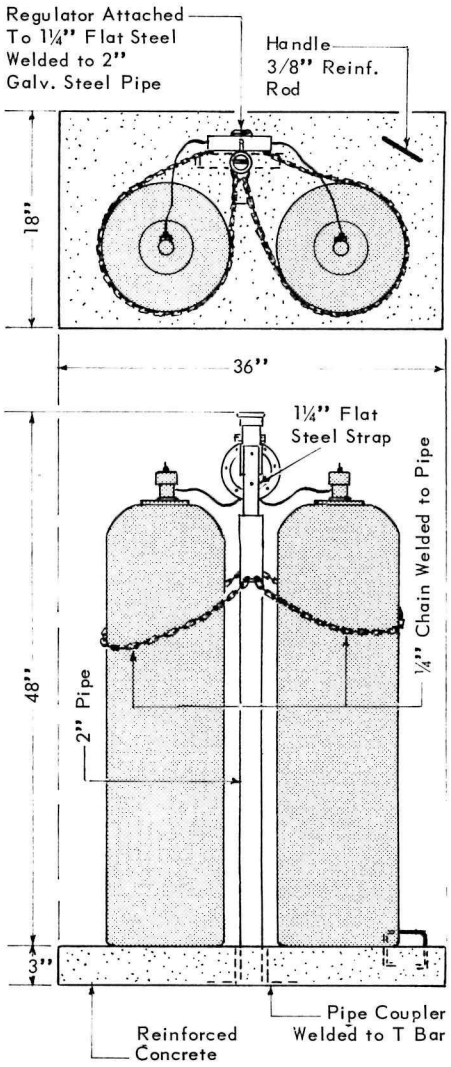

Construction of the device is easy, the cost low. It is neat, simple, portable (can be moved to accommodate different size trailers), and it complies with National Park Service safety requirements. The sketch and photos tell the story.

NONSKID "GLOVES"
(NPS W 66-160)

Clarence A. Medeiros, Laborer, City of Refuge National Historical Park has found a way to make the lifting of heavy and rough objects easier on the hands and safer, too.

Cut from a discarded inner tube two rectanglar pieces 8 to 9 inches wide and 12 to 13 inches long. Fold each piece the long way and make a cut at right angles to the fold, about 2 in. from one end, 1 1/2 in. and 2 in. long. Make another cut parallel to the first about 3 in. from the same end. (The "gloves" will work just as well with only one cut, if your prefer.)

Place your hand through the slit or slits so that the rubber covers your palm. Trim the edge to fit.

With the rubber between your hand and the rough heavy object to be moved, you'll be more comfortable and less likely to be cut or scratched. Fingers and hands are left free, and in hot weather, since the hands are not encased in a glove, there is no discomfort.

CARRY A SPARE MANTLE IN YOUR LANTERN
(NPS SW 66-88)

You can always have a new mantle for your gasoline lantern — where you need it, when you need it. William F. Nowlan, Jr., Elevator Mechanic at Carlsbad Caverns National Park, suggests this way to do it.

Install a false bottom in the lantern. The bottom of most lanterns is slightly recessed and the edges around the bottom are rolled in. Cut a circle of lightweight aluminum to fit. Drill a small hole in it. (This will aid in removal.) Make a straight cut approximately an inch long at some point on the edge of the circular piece. The false bottom can be gently forced past the rolled edge of the bottom of the lantern; force the straight edge into place last.

There will be plenty of room to hide an extra package of mantles safely.

SPEED UP STAINING JOBS
(NPS MW 67-1)

A pressure-type weed spray can, such as a Hudson 6220, 2 1/2 gallon or a 6335, 3 gallon, with adjustable nozzle may be used successfully for applying stains and wood preservative.

Eugene Koevenig, Maintenance Foreman at Mount Rushmore National Memorial, made this suggestion. All you have to do is pump up pressure and proceed. No power or auxiliary units are required, so this device is ideal for use at isolated campgrounds, on trails, fences, sign posts, and rest rooms. The pressure-type weed spray can enables the user to reach heights of 8 feet from ground level and to spray down to the ground without stooping.

Gene says that using this method will reduce staining time by at least 50% and that the average person making $2.00 an hour would save $8 a day in labor.

RAISING AUTOS TO FIT OVER TRUCK HOIST
(NPS SW 65-51)

With automobiles being built closer and closer to the ground, it became necessary to use bumper jacks on the cars and station wagons at Bryce Canyon National Park so that they would fit over the heavy duty truck hoist in their shop. Ward Excell, Foreman II, R & T, eliminated this nuisance in the following way.

A 2-inch ramp of reinforced concrete was installed along the sides of the hoist. It was edged with 2-inch angle iron. The ramp allows the low slung vehicles to use the hoist with no other steps involved, while still permitting trucks to use it just as before. The cost, for materials and labor, was a little over $60.

For safety, to avoid stumbling over it, the ramp is painted a different color from the floor.

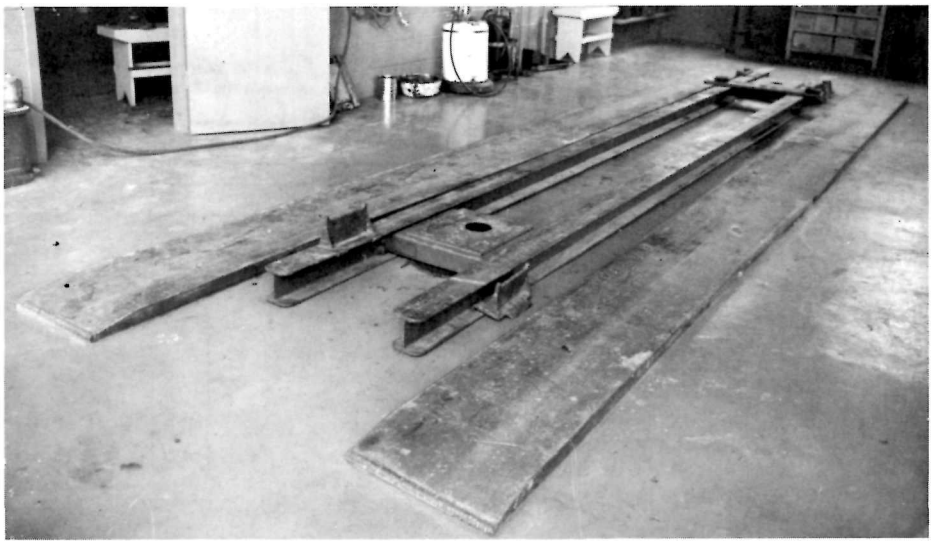

TRASH BURNER FROM CULVERT PIPE
(NPS W 66-38)

The trash burner which was being used at Fort Clatsop National Memorial was a chicken-wire covered pipe framework burner which was extremely hazardous to use during the summer months as heat and sparks were not adequately contained.

Administrative Assistant Jack V. Houston had a local welder convert a section

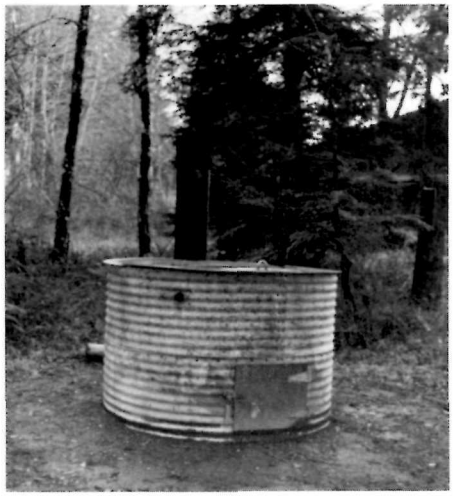

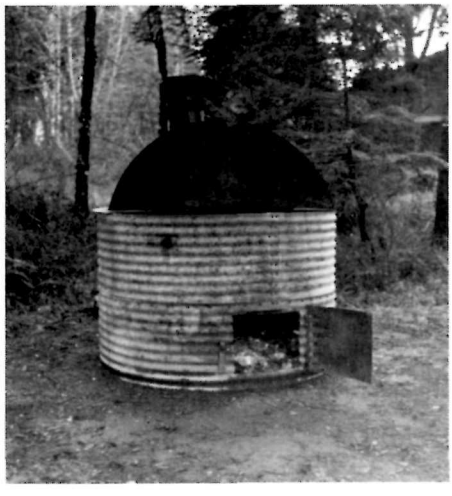

of culvert pipe, which had been used as a pump housing, into a trash burner. The pipe, which was 6' in diameter and 4' long, already had on one end a cover with a hinged portion with a handle.

The welder added a cleanout door, chimney with replaceable spark arrestor and a support for the top lid to prevent it from falling all the way back. He also burned some slots, just the width of the cutting torch tip about 2" long around the bottom of the pipe a foot from the ground and 2' apart for combustion air. The weight of the steel throughout, with the exception of the spark arrestor, is such that the estimated life of the burner is from 15 to 20 years. The alterations cost $86 and Jack estimates that the unit will pay for itself in three years and save about $360 over the fifteen year period.

OUTDOOR BROCHURE DISPENSING CABINET
(NPS SW 66-43)

The cabinet shown in the photographs was designed and built by Keith M. Wilkins of Glen Canyon National Recreation Area.

The hinged cabinet, which may be completely closed during bad weather, opens flat for full display and easy access. Plastic shields are placed in front of the

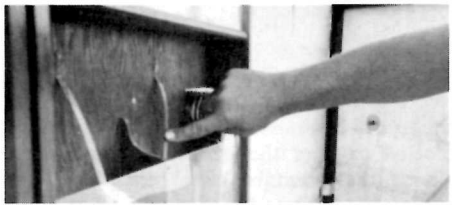

material and spring tension holders in the back keep it upright and in place.

Keith used old hack saw blades with the teeth filed off to make the spring tension holders.

LONGER LIFE FOR RUBBER STAMPS
(NPS SW 66-35)

Rubber stamps seldom wear out from proper use, but they deteriorate fairly rapidly from abuse or neglect. Apparently many rubber stamp users are unaware that soap and water and/or a reasonable stiff, small brush (such as one for cleaning a typewriter), and 20 seconds' worth of elbow grease will rejuvenate almost any stamp which is making an illegible imprint. A rubber stamp's worst enemy is dirt and dried ink; after a few month's build up, this type of goo should be removed.

If rubber stamps are washed, the label inside the usual plastic holder should be removed and reinserted when the stamp is dry. If the label becomes dirty, it can easily be replaced by cutting the proper size strip of paper from an enamelled, or otherwise-coated paper. (You can cut a piece from a blank area of a magazine cover made from coated paper.)

George A. Fisher, Jr., Administrative Assistant at White Sands National Monument made this suggestion.

MAKING PAVEMENT STRIPING A ONE-MAN JOB
(NPS W 65-67)

If your striping machine does not have a means for distributing glass beads on reflective pavement stripes, here's a suggested attachment for the purpose.

At Sequoia and Kings Canyon National Park the glass beads had to be spread by hand until Harold E. Scott, Operator General, designed the valve attachment shown in the sketch. At a cost of $6 Hal made the striping operation a one-man job, and the roads forman at Sequoia and Kings, where the device has been in operation for five years, estimates a saving of $3.80 a mile.

The width of spread and quantity of beads distributed may both be adjusted.

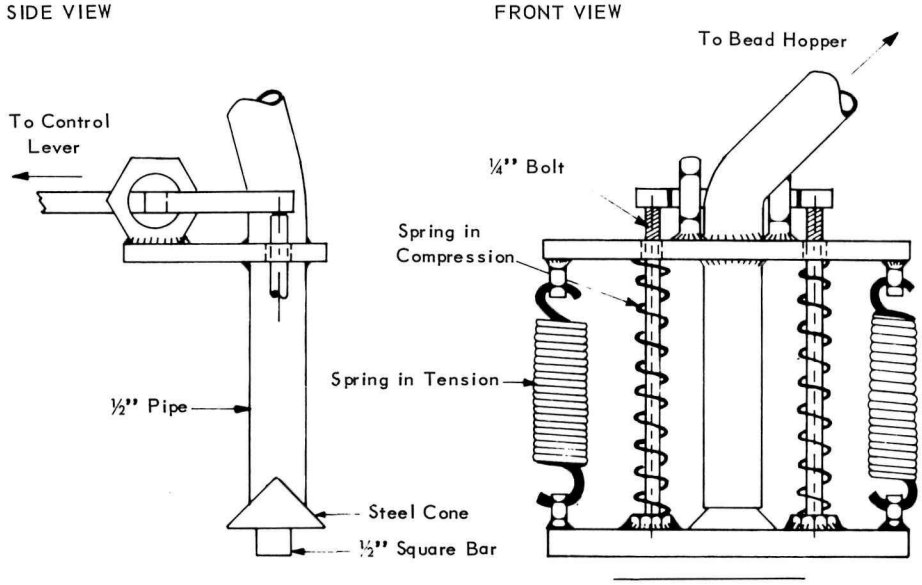

COLLECTOR FOR CUTTINGS FROM DRILL PRESS (NPS MW 66-65)

You can practically eliminate clean-up time around your drill press by making and using the device shown in the sketch,

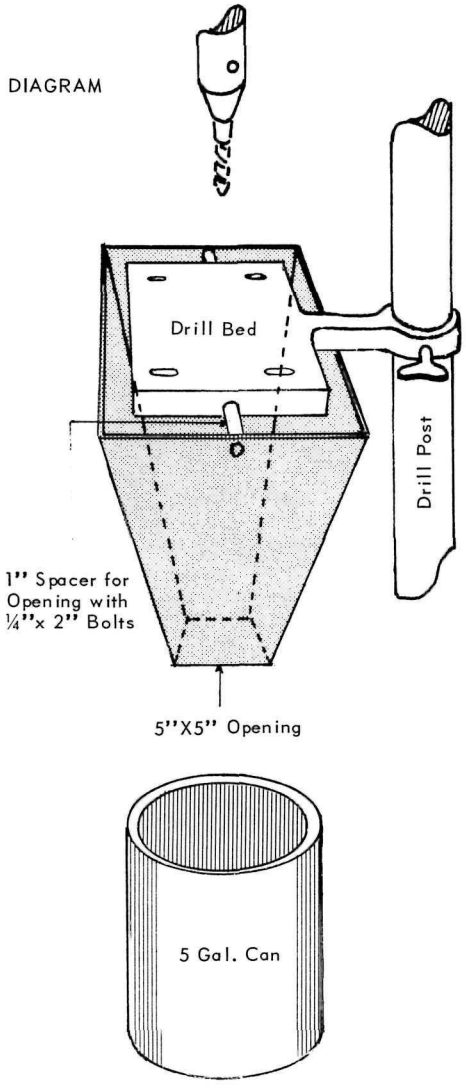

which was designed by Orville G. Romans, Heavy Duty Mechanic at Grand Teton National Park.

Orv made a funnel-shaped box (see sketch for pattern) approximately 1" larger than the drill press bed to be sure all of the bit cuttings fall into the five-gallon can below the funnel.

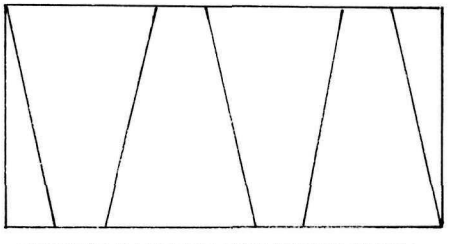

CUTTING PATTERN FOR SHEET METAL

Here are the materials that were used: 28-gauge sheet metal, 18" wide and long enough to get four pieces wide enough to fit your particular drill bed (using four times the wide-end of a piece to get the length); two 2" x 1/4" bolts; two 1" x 1/2" spacers; and a 5-gallon can.

SAFE CARRIER FOR LIQUEFIED PETROLEUM GASES (NPS SW 66-46)

Safe transportation of liquefied petroleum gas bottles is of utmost importance. They should not be carried in a horizontal position. John H. McKee, Maintenance Superintendent at Glen Canyon National Recreation Area has designed a rack for pickup trucks, which are frequently used to transport LPG bottles in parks (see photo and sketch).

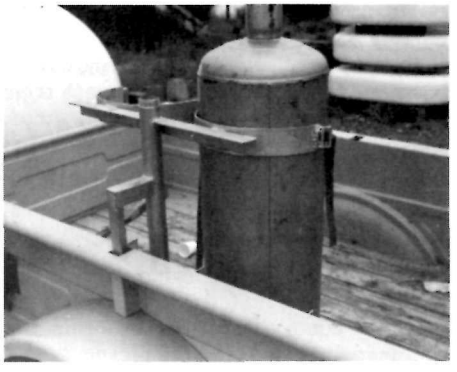

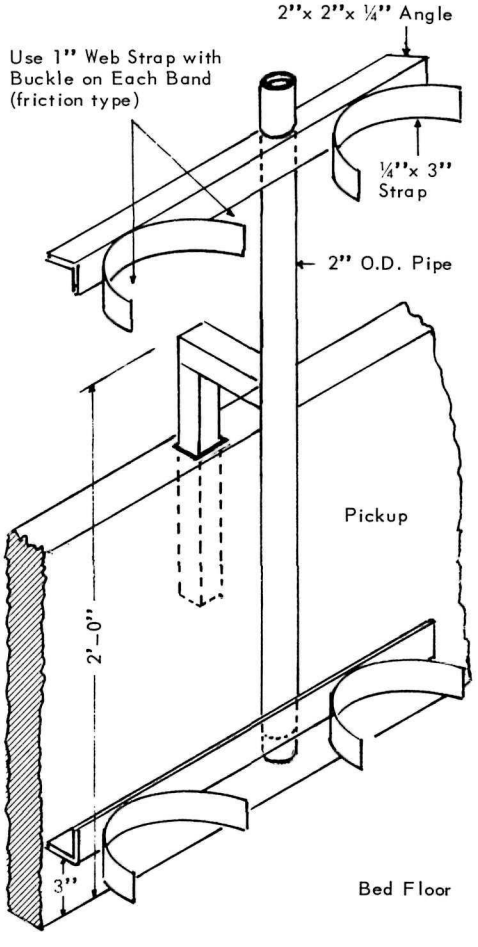

DIAGRAM

This two-bottle rack is fitted into a pickup with a center hole, but the design could be varied, for instance, a cross piece could extend from corner hole to corner hole at the rear of the pickup and the rack constructed to hold three bottles.

FORKLIFT TRAILER HITCH (NPS SW 66-44)

At Glen Canyon, Keith M. Wilkins has adapted a forklift to move house, boat, or other types of trailers. The hitch provides a quick, easy method, which allows a considerable amount of maneuverability when operating in close quarters. One man can perform such moving operations with ease.

The photos show how the adaptation can be accomplished. With this particular forklift, one tine can be removed and the ball affixed to the remaining tine for especially close quarter operation.

Land may be used to minister not only to man's physical well-being, but also to his mind and spirit—"man does not live by bread alone" and some lands should be preserved for what they are, as well as for what they will produce. —Newton B. Drury.

COMPLETE CAMPGROUND CLEAN-UP UNIT (NPS SW 65-85)

Charles E. Blundell, Maintenanceman at the Great Sand Dunes National Monument, looked at their park clean-up operation and decided it needed streamlining. Two groups of two men each and a dump truck and a pickup were required for the job. One group worked all morning, and the other until three in the afternoon. One group cleaned fireplaces, dumped ashes, washed tables, and searched the area for trash; the other searched, hauled, and dumped trash.

Trash was emptied from the trash barrels into a laundry tub, lifted to arms length and dumped into the dump truck from

the side. Of course, if there was any wind the operation was complicated by having to have a screen over the dump bed and having to lift it each time. If the barrel was full it took three tub loads to empty it. Ashes were dumped into a shortened barrel hauled in the pickup, which also carried water and supplies for cleaning the tables.

Chuck consolidated the operation by building what he calls a "slip-on unit" for the dump truck. He made an electric-winch-operated bucket the width of the dump bed and attached it to a carrier which runs on tracks. It may be lowered to a height of three feet which makes it easy to dump the barrels directly into it. The bucket has two lids which keep trash from blowing out, but which open when dumped. A screen, attached to the bucket and covering the slip-on unit, keeps the trash from blowing out of the dump bed at all times. The slip-on unit has three times the capacity to hold trash as did the original truck dump bed.

Chuck made two containers from 1/8" steel plate and attached one on each side under the rear of the dump bed. In this position, the containers are easy to fill and they dump with the trash. This also eliminates the need for the pickup.

Warm water for washing those tables would be nice, Chuck thought, and proceeded to mount a five-gallon galvanized water tank on the truck frame with the exhaust running through it to provide the heat. All other cleaning supplies and equipment hang in places provided on the side of the dump bed.

Chuck built the unit for $691.71 counting materials and his labor, and it has been estimated that it saves almost $2,800 a year. Superintendent Harold F. Schaafsma says that this labor saving device is also important to them because it reduces the safety hazards of lifting heavy garbage and trash cans 6 feet in the air and of fire danger from live ash.

FIRE FIGHTING UNITS FOR BOATS AND REPAIR DOCKS (NPS SW 66-47)

In the experience of William L. Germeraad, Supervisory Park Ranger at Glen Canyon National Recreation Area, small

CO-2 and dry chemical units will not extinguish a going fire in a fiberglass boat. Bill designed the fire fighting unit shown in the photographs to meet such a situation as well as for use in areas where small first-aid fighting applicances are inadequate.

A surplus gasoline motor coupled to a WX-10 Pacific Pump with a rating of 35 GPM at 225 PSI is the basis of the unit. The pump is a positive displacement type and requires no priming. The unit was given mobility by welding the axles and wheels from a junked lawn mower to the frame. The hose storage reel serves as a handle to use in moving the unit around the dock.

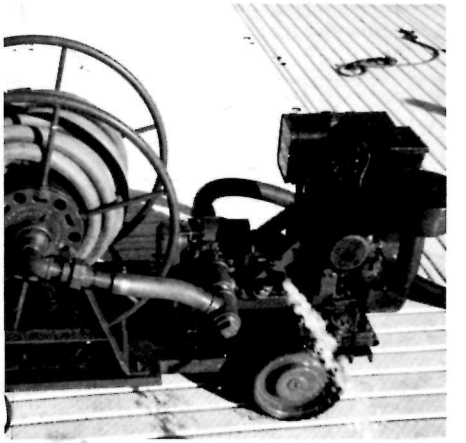

The pumper unit can be used for the following purposes: fighting fire with water, fog, or foam mixture; cleaning boat bilges and motors (the pump is fitted with a 3/4-inch faucet to provide a water supply connection for the steam cleaner used for this purpose); washing boats and the deck of the repair dock; as a boat bailer, by dropping the suction hose into a flooded boat; for fighting offshore boat fires or bailing out swamped boats offshore (since it is a light weight unit).

GETTING PUBLIC HELP IN BEACH CLEAN-UP (NPS SW 65-54)

Beach clean-up which must be done by boat consumes much time of ranger and maintenance personnel. With increased visitor use, and mounting quantities of scattered litter, the problem is how to get

public cooperation in keeping beaches clean. District Park Ranger, David J. McLean, Lake Mead National Recreation Area, in searching for solutions, found that the most frequent response from people questioned about beach clean-up was about the difficulty of transporting trash back in paper sacks and cardboard boxes which become water-soaked. All too often, the whole mess is just left when the bottom falls out of the sack or box.

Dave remembered that during a clean-up program some years earlier, park personnel had used gunny sacks to transport trash back to trucks at the launching ramp and that they had continued to use them. Why not make these sacks available to the

public, he though, for collecting and transporting their trash back to the disposal carts? Consequently, all Mohave District boat patrols were instructed to carry gunny sacks in their boats, so that they might be left with beach campers. Along with the sacks went a short blurb about litter clean-up. Soon many groups were asking for additional sacks so that they could clean-up some of the mess that was left by pre ceding campers.

The idea caught hold and seemed to multiply. Visitors were asked to use the same sacks over and over. When leaving the area, they were asked to put the empty sacks in a special box provided for the purpose on the launching ramp, or loop them over the tongue of the litter carts. Half-inch pointed steel hooks were mounted on the front of each litter cart to serve as holders for extra gunny sacks (see photo). Repeat visitors began to pick up their sacks at the launching ramp instead of waiting for the boat patrol to drop them off at their beach camps.

One measure of the success of the plan was evident when at one point the supply of gunny sacks was exhausted. A storm of complaints and inquiries about the sacks poured in.

Now, not only do the beaches stay clean, Dave says, but many of the larger groups and boating clubs clean a cove or beach before camping, and the load of litter being brought in by the public on heavy weekends is so large that additional carts have had to be provided. He attributes the success of the program to the fact that park personnel go beyond merely establishing a regulation; they make it evident to the visitor that they are actively helping him to abide by it. There is a better relationship between rangers and the public, and Dave feels that the new atmosphere is going to help in enforcement of other boating regulations.

Large grain sacks have been found best suited to litter collection because of their strength as well as the size. They are bought locally for ten cents a sack. For the park that means an investment of only $20 or $30 a year. Of course, the rangers still do minor beach clean-up themselves, but it has been estimated that the public is doing half or more of the job, at a cash saving of about $25,000 a year, and what is even more important, bringing a new co-operative attitude among park users.

HEAT FROZEN GROUND TO DIG FASTER (NPS SW 66-50)

Caretaker Ben A. King of Great Sand Dunes National Monument and a co-worker were trying to dig in frozen ground, but weren't making much headway. It took them a half an hour to go only four inches. Then Ben had a great idea — why not fill the hole with hot water and then keep it hot with their weed burner.

It worked! They finished the hole to the desired depth of two and a half feet, a foot and a half of which was frozen, in a half hour — the same length of time it had taken them to go four inches in frozen earth.

Besides being easier, Ben estimates the time saved on this one hole at about two hours.

UTILITY BOX FOR POWER SAW AND TOOLS (NPS SW 66-98)

Everything he needs is right where it should be when Park Ranger Thomas Hobbs of Mesa Verde National Park gets ready to use the power saw. He planned it that way.

The utility box which Tom designed is 37" long, 11 1/2" wide, and 14 1/2" high (see photos). It is so constructed that when closed, the saw and all of the accessories are held securely even during rougher than normal treatment. Slots provided for the saw blade and handle at the ends of the box

prevent lateral movement, and the top, when closed, prevents other movement.

A one-gallon can, which is used for the gasoline mixture, has been fastened opposite the saw motor and acts as a counter balance. Necessary tools, chain sharpener, and a small can for chain oil have been secured to the inside front portion of the box. This was done by cutting sections of innertubing to appropriate sizes to hold specific items and nailing them to the box.

The top and front sections of the box are hinged in such a manner that when opened, the contents are completely exposed and readily accessible. The box is held in the closed position by two regular door hasps. Two men can handle it easily.

LUBRICATING AUTOMOTIVE DOOR LATCHES (NPS MW 67-8)

Door latch assemblies of new cars and trucks usually are lubricated with a spray-on or brush-on light grease. After about 5000 miles this light grease channels away from the friction points and wear begins. The latch may fail to operate properly, causing a safety hazard. External lubrication does not properly reach the inaccessible portions of the assembly. Removing the door panel was the only way of getting to the parts needing lubrication—that is until Donald L. Johnson, Automotive mechanic at Grand Teton National Park made the following suggestion.

Don removes the upper latch retaining screw, and using a squirt-type oil can, lubricates the inner assembly through the opening. This not only saves the time of removal and replacement of the door panel, but a lubricated lock is less likely to become a safety hazard.

Don suggests that this door latch lubrication become a part of routine vehicle maintenance with a check scheduled for every 2000 or 4000 miles.

RECIPE FOR SUCCESS: Be polite, prepare yourself for whatever you are asked to do, keep yourself tidy, be cheerful, don't be envious, be honest with yourself so you will be honest with others, be helpful, interest yourself in your job, don't pity yourself, be quick to praise, be loyal to your friends, avoid prejudices, be independent, interest yourself in politics, and read the newspapers.

—Bernard M. Baruch

The following is a partial listing of individuals who have received National Park Service Suggestion awards to date. Following the listed awarded idea, you will find a page number if the idea was reported in this issue of PLOWBACK. Other listings cover awards for ideas of local application only. Awards information received after November 1, 1966 will be reported or listed in subsequent issues of PLOWBACK.

Albaugh, Ruth C. (NPS MW 66-54) Regional information publication to answer requests.

Arquero, Clyde (NPS SW 66-26) All field surveys be tied.

Ball, Judson S. (NPS EO 65-29) Investigation of critical-path scheduling as a programming tool.

Blundell, Charles E. (NPS SW 65-85) A complete campground cleanup slip-on unit. See p. PL-6.

Clavelous, John B. and Juillerat, Leroy F. (NPS NCR 66-102) Truck tailgates changed to day-glow color with black lettering.

Cummings, Calvin R. (NPS SW 66-20) Change uniforms.

Cummings, Calvin R. (NPS SW 66-59) Correct potential poisoning hazards resulting from unmarked and identical containers.

Dellacasa, Philip F. (NPS 66-18) Show agency Zip Codes in "agencies served by Interdepartmental Dial Code System."

Downer, Leslie E. (NPS SER 66-89) System to store and catalogue 35 mm slides.

Excell, Ward L. (NPS SW 65-51) Guide ramps for truck hoists. See p. PL-3.

Fisher, George A., Jr. (NPS SW 66-35) Longer life for rubber stamp. See p. PL-4.

Germeraad, William L. (NPS SW 66-47) Multipurpose fire unit for boat dock provides fire protection. See p. PL-6.

Hanna, Karl H. (NPS SW 6653) Partial elimination of use of Form 1-062.

Hanson, Kermit E. (NPS SW 67-3) Label switches on emergency equipment in vehicles.

Hape, Atwood F. (NPS MW 67-63) Color coding snow stakes.

Hejny, Adeline R. (NPS SW 67-3) Presentation of Oath of new permanent employees by key personnel.

Hill, Warren H. (NPS SW 66-82) Quick and easy title slides. See p. PL-1.

Hobbs, M. Diane (NPS NW 67-39) Introduction of new employees by photo and short biographical sketch.

Hobbs, Thomas O. (NPS SW 66-98) Utility box for power saw and tools. See p. PL-7.

Houston, Jack V. (NPS W 66-38) Trash burner. See p. PL-4.

Hovig, Lawrence, J. and Eubands, Jerry A. (NPS SER 65-117) Fertilizer spreading by aerial helicopter. See p. PL-2.

Johnson, Donald L. (NPS MW 67-8) Lubrication of door latch assemblies on autos and trucks. See p. PL-8.

Karban, Joseph W. (NPS PSC DC 66-4) Adoption of safety slogan stamp on contract drawings.

King, Ben A. (NPS SW 66-50) A method for digging holes in frozen ground. See p. PL-7.

Koevenig, Eugene (NPS MW 67-1) Pressure type week spray can be used for applying stains and wood preservative. See p. PL-3.

Koubele, Betty R. (NPS 66-35) CSC Building bulletin boards show room number of office dispensing test information.

Lawler, Mary Ann (NPS MW 67-11) Change of D&C offices in Service Centers.

Lawler, Mary Ann (NPS MW 67-104) Record check in ledger instead of individual forms.

McGraw, Frances D. (NPS NCR 66-51) Job Order forms be printed with pencil carbon inserted between the sheets.

McKee, John H. (NPS SW 66-46) Rack designed to carry liquefied petroleum gas bottles in trucks. See p. PL-5.

McLean, David J. (NPS SW 65-54) Provide public with large gunny sacks for trash to be carried to litter carts. See p. PL-7.

Manion, Tracy E. (NPS MW 67-40) Modification of steam control in Old Courthouse.

Martinek, J. A. (NPS MW 66-88) Authorize NPS emblem for use on the Eddie Bauer winter hat.

Medeiros, Clarence A. (NPS W 66-160) Non-skid rubber gloves from discarded inner tube. See p. PL-3.

Meek, C. O. (NPS 67-2) Rephrase "stereotype" expressions in replies to letters of employment.

Mintzmyer, Lauretta L. (NPS MW 66-105) Change of Address forms.

Mote, William P. (NPS SW 66-109) Safety-improvement device for hand routers. See p. PL-1.

Nowlan, William F., Jr. (NPS SW 66-88) Install false bottom in gasoline lanterns for carrying extra mantles. See p. PL-3.

Owen, Mabel H. (NPS SW 66-73) Issuing of ball point pens by supervisors to employees.

Pannell, Detroit (NPS NCR 66-84) Install guard rail Glen Echo, Md.

Ponec, Carol (NPS MW 66-103) Consolidate telephone list used in calling field areas.

Rawlings, Harry (NPS SW 67-49) Design and construct sign for promoting the Golden Passport.

Romans, Orville G. (NPS MW 66-65) A "bit cutting" collector for drill press. See p. PL-5.

Sanchez, Medardo, Jr. (NPS SW 66-63) Transmittal & receipt form for use in Personnel Div.

Scott, Harold E. (NPS-W 65-67) Valve for use on striping machines. See p. PL-4.

Stevenson, Linda Kay (NPS W 67-19) Place a piece of masking tape over Acco fastener for protecting desks and table tops.

Stickler, Raymond C. (NPS W 66-104) The hood of maintenance vehicles be painted dark or matte color, and color inside the cab that absords rather than reflects light.

Strand, Richard H. (NPS MW 67-41) Use of carbon filament lamps instead of tungsten in wall bracket fixtures in upper levels in Old Courthouse rotunda.

Tyers, John A. (NPS MW 67-19) Surplus steel ammunition boxes lined with polyurethane forms. See p. PL-1.

Underwood, Dorinda C. (NPS 67-111) Method prevents undue surnaming of yellow box copy for Secretary's Office.

Wallis, O. L. (NPS 67-4) Additional recognition of 50th Anniversary.

White, Kathe E. (NPS 67-16) Records division eliminate one yellow copy in correspondence.

Wilkinson, Cecil C. (NPS 66-14) Staff meetings be photographed in group.

Wilkins, Keith M. (NPS SW 64-44) Fork-lift trailer hitch. See p. PL-5.

Wohlbrandt, Glen and Pearson, Tom (NPS SW 66-34) Pad and support for LP gas cylinders. See p. PL-2.