PARK PRACTICE

NOVEMBER/DECEMBER 1963 VOL. 7 - NO. 6

Grist

issued by The National Conference on State Parks
in cooperation with the National Park Service, U. S. Department of the Interior

Commentary—

GETTING MORE MILEAGE FROM THE TRAINING FUNCTION

by Julius E. Eitington, Chief Training Officer, NPS, Washington, D.C. Mr. Eitington is the author of A Plan For The Man; see Grist, Vol. 7, p. 27 for a review of this informative booklet. *-Ed.*

Most training programs regard orientation, and rightly so, as the first step in the training process. The primary purpose of orientation obviously is to acquaint the worker with his new environment so that he will get into production more quickly. But when we look more closely at orientation training in practice, we find that all too often the worker receives a lot of hoopla about the fine outfit he's going to become associated with, its tremendous leaders, both past and present, its glorious traditions, and the fine fringe benefits he can expect. This Madison Avenue pitch is supposed to impart a gigantic glow to the new man so that he will "identify himself" with the organization and turn in a gung-ho performance now and for the rest of his career.

What gets lost in this all-important first contact is the contribution that he, as an individual, can make to the mission, and more particularly, the work of his immediate unit. The behavioral science research points up quite clearly that with most employees "work's the thing" insofar as basic satisfaction and motivation is concerned. So let's not worry so much about a new worker's attachment to the organization, its traditions, etc.; this will grow on the man gradually as he achieves satisfaction from the work and receives the right kind of guidance and support from his superiors. Then, too, the organization has to earn loyalty before it can expect it.

After we have the man on the job, the worker should:

Learn what his job really is.
Be told the standards of performance (quality, quantity, safety, etc.) required to measure his progress.
Receive training in the skills and knowledges needed to perform in relation to the standards.
Be given the encouragement, guidance and support (or motivation) he needs to perform well.
Receive candid feedback regarding the degree to which he is meeting the standards (his boss' expectations).

Obviously, the immediate supervisor is the key figure in this all-important training responsibility.

And as the man grows, he should be given greater freedom to do his work without petty checks, controls and reviews. For just as the wise mother knows Mary will never learn how to bake a cake if mother insists on doing it for her, so the savvy supervisor will recognize the value of full delegation as a training tool.

Undoubtedly, all of this may sound like a big order, training-wise. Frankly, it is. Yet, it is a vital one to be filled. In any case, we wonder if all of us shouldn't do a good amount of soul searching regarding these observations. Some one once said that we should look at training as akin to a co-ed's fall sweater—you only get out of it what you put into it. Well, we must confess that we don't know much about outer knitted wear, but if the analogy sparks a reappraisal of your training activities, perhaps it's an adequately good one.

A REVOLUTION IN TRASH DISPOSAL

How would you like to send a two-man crew out into the park or the campgrounds, have them empty every trash barrel, then return to the service area with all of the refuse disposed of, but without having gone ten feet out of the way to dispose of it, or without having to turn the trash over to someone to burn or bury?

Impossible? Not at all, for there has recently been introduced on the market a revolutionary and completely new device called the 'Incin-O-Mobile'. This piece of equipment, which grew out of a suggestion made by the Park Practice Program, has been developed during the past year by the Washington Incinerator Company, 41 P St., S.E., Washington 3, D.C. It is a self-contained unit, mounted on the chassis of a trailer which can be pulled by a jeep or other light truck, and is designed to negotiate park roads and trails.

One of the important features of this device is that it gives forth relatively no smoke, and no fly ash or odor for these are destroyed by an after-burner before the harmless gases are released through vents in the top. Incin-O-Mobile has been designed to meet the very rigid smoke standards of the District of Columbia. Moreover, there is no danger of live sparks setting fire to woods or fields.

Fired by LP gas carried in steel tanks on the front platform of the trailer, there is sufficient gas fuel to operate the mobile incinerator for at least 12 hours at full capacity.

Recent tests have demonstrated that it will dispose of the material in a fifty-five gallon trash barrel by the time the trailer has moved to the next location 100 yards away. The doors opening into the firebox at the rear are at a convenient level for handling trash barrels and baskets.

When the day's run is over, it is a very

simple matter to pull four levers to release unburnable materials such as bailing wire and what is left of cans and bottles. This refuse generally amounts to no more than that which can be put in a peach basket. Moreover, water used for cooling in the jacket of the firebox is drained to dampen down this hot residual material and to flush out the ash pan.

One of the great conveniences of this device is that it does not tie up a piece of

(Cont'd on page 42)

PARK PRACTICE **Grist**

a bimonthly Park Practice publication issued at Washington, D. C. by the National Conference on State Parks cooperating with the National Park Service, U. S. Dept. of the Interior, and other federal, state, and local park and recreation authorities.

National Conference on State Parks
901 Union Trust Building Washington 5, D. C.

MATERIAL FOR PUBLICATION should be sent ONLY to:
Chief, Park Practice, National Park Service, Washington 25, D.C.

—SUBSCRIPTION RATES—

NEW Membership, FULL Program; a complete, up-to-date library of DESIGN, GUIDELINE, and current year and 4 previous years of GRIST, plus all issues through the calendar year . . . . . $30.
After January 1, 1964, the above library . . . . . $35.
RENEWAL Memberships, all material each calendar year . . . $10.
(10% discount on 10 or more new or renewal memberships)
GRIST (only), including binder, each calendar year . . . . . $ 3.
(Subscription to GRIST is included in new & renewal memberships.)
GRIST, multiple copies in addition to any above memberships, without binders to one address only, per annual volume . . . . 60¢
with binders, any annual volume, to one address, each . . . . . $ 1.
(when in addition to full membership or 1st vol. of GRIST)

APPLICATIONS FOR MEMBERSHIP, FEES, and INQUIRIES should be sent ONLY to:
Executive Secretary, National Conference on State Parks
901 Union Trust Building, Washington 5, D. C.

Printed by DISTRICT LITHOGRAPH CO. INC., Washington 7, D.C.

(Cont'd from page 41)

equipment, for the truck used to pull the trailer may be diverted to other purposes when the trash collecting is finished.

Another point worth noting is that it is no longer necessary to have a trash truck or to convert a dump truck for the repetitious trash removal operation.

But perhaps the most important feature of a mobile incinerator is that for many clean-up operations a large stationary incinerator is no longer necessary in some remote area of the park or, what is far worse, using a part of the park as a dump which will draw rodents, vermin, and scavenging animals. All too often 'borrow' pits suffer a fate worse than being just a 'borrow' pit!

The photographs taken during a demonstration show the prototype of this Incin-O-Mobile which the Company is now putting into production. Production models are expected to be available about March 1, 1964 and will retail at a price somewhat under $6,000. per unit. Readers who are interested in this unique piece of equipment should address the Washington Incinerator Company for prices and more details.

There is no social directory in the wilderness. . . . —Henry van Dyke.

DRYING RACK FOR WINDOW SASH OR SIGNS

A neat and simple drying rack for window sash or sign painting can be made up very quickly using the design made by Ray Lehto shown in the sketch, sent in by Mac Frimodig when he was manager of Fort Wilkins State Park in Michigan. The design permits use of standard saw horse supports and almost any size lumber that happens to be handy.

Two boards, such as 1 by 6-inch, have nails driven through at 2 1/2-inch intervals so that about 3/4 of an inch of each nail protrudes above the surface; or finishing nails may be used, driven from the top and leaving about 3/4 of an inch of each standing above the surface. As the sketch shows, these boards are nailed on top of a pair of horses. To the same horses are nailed upright frames of a height which will allow for the size window sash or sign you will be painting. (If you make the top bar adjustable, you can accommodate a wide range of sizes.) At the center of the top of the frame you mount a board in which holes have been drilled at 2 1/2-inch intervals, such holes being big enough to allow easy passage of nails to be used to hold the drying sash in place.

The holding nails, which are put through the holes in the upper board, can be long enough to allow for variations in sash size of as much as 3 inches. The holding nail may be tapped into the frame of the sash, or, where the sash is metal or you want to avoid making a hole, you can drop a long nail through and allow the piece of sash or sign to lean against it at a slight angle.

If you happen to have an art class among the park visitors or employees, you can let the members put their drying canvasses on your rack.

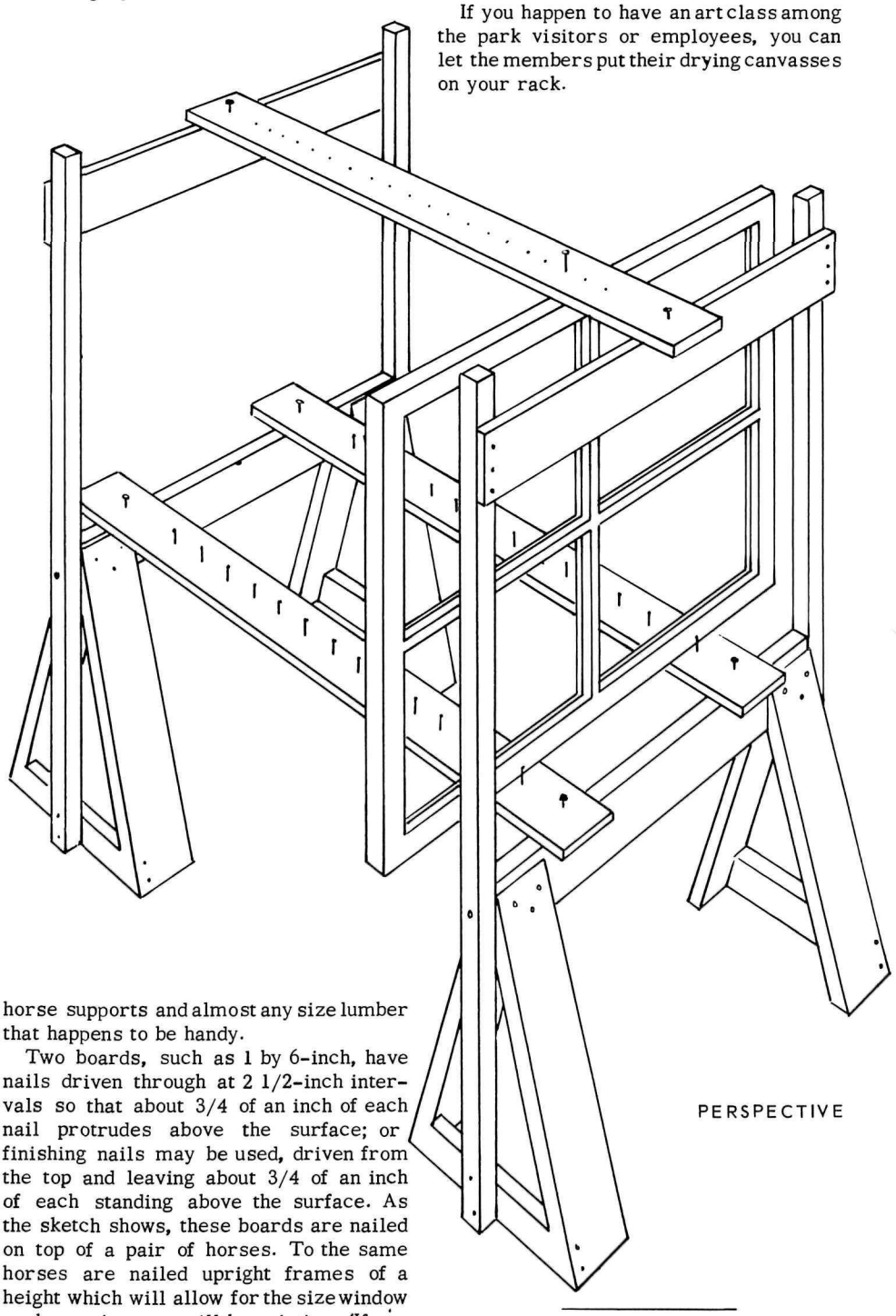

PERSPECTIVE

ATHLETIC FIELD MARKING PAINT

If you have football or other athletic fields in your park and have sometimes worried about the eyes of players tackled in football or otherwise thrown to the ground along a lime-marked line, a new Glidden paint will interest you. The new

product is called simply Glidden Athletic Field Marking Paint.

From ten to fifteen gallons of the paint are required to stripe a football field. The paint is water mixed and may be applied by any convenient method—brush, roller, or spray. Containing Lithopone, Calcium Carbonate, Silica, and Magnexium Silicate, this emulsion-type striping paint may be tinted in a number of different colors by applying Glidden Brilliant Color at the rate of 1/2 pint to the gallon before thinning. It is claimed by the Company to be harmless to the eyes and skin.

Mike Koss, Greenskeeper at the Springfield (Va.) Golf and Country Club ran tests for Park Practice, painting 4-inch cart diversion stripes before the course greens. The grass was mowed with a tee-mower and then the paint stripe was applied. He reports that it was still serving its purpose after two weeks which brought a hard shower and a two-day steady rain.

SOFTENING VARNISH BRUSHES

Even when you have cleaned varnish and shellac brushes carefully, they often turn up too stiff to use "as is" without softening when you want to use them again. The staff at Straits State Park, Michigan, suggests that a few strokes through the paint brush with a wire brush will not only soften it up nicely for use but will take out the broken ends of hairs that are the cause of much frustration while varnishing.

On a particularly stiff paint brush, you may find it necessary to combine soaking in solvent with your wire brushing operation. If this combination operation will not work, that paint brush may be ready for the scrap pile.

NEW WOOD FINISHES

A unique finish system has been used on signs and other exterior wood structures for several years by many of the Western Parks, particularly the Central Sign Shop at Yosemite National Park, which does work for parks throughout the United States.

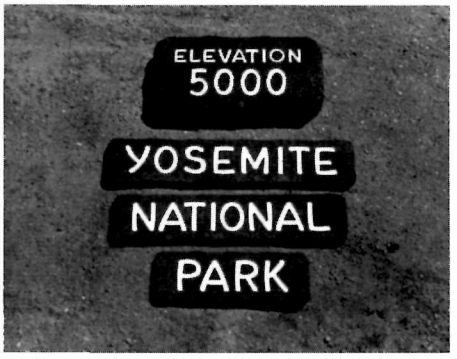

A redwood color stain is applied, followed by one or two coats of a clear finish. Sometimes just the single coat of stain is applied. Redwood, famous for its very attractive color, fades rapidly when exposed to sunlight. Hence, the need for a stain on this most durable of woods.

The uniqueness of the finishes is their base, a very flexible oil known as "liquid raw-hide", which does not crack or peel as varnishes do—its built-in flexibility gives it a very long life ideal for severe weather conditions.

These products were originally developed specifically for hard-to-coat redwood, but they are being used more and more for other woods. Glacier National Park is using the stain and clear on fir.

Recently a new stain was developed; it is a modification of the new Federal Specification TT-S-708-a. This stain, called No. 66 (a happy coincidence with our MISSION 66) is being used by Sequoia National Park.

For further information, contact Behr Process Corp., at either Box 1287, Santa Ana, California or 936 N. Telegraph, Dearborn, Michigan.

HOW TO DRILL UNIFORM HOLES

That friendly writer of many useful suggestions, Donald M. Black, Naturalist with the Natchez Trace Parkway, says that in woodworking he often finds it necessary to drill several holes "just so deep." Usually he has made a gauge or guide by cutting a piece of dowel rod to a length which will prevent the drill bit from going deeper than desired. He has made a hole down through the dowel, then slipped it over his drill bit.

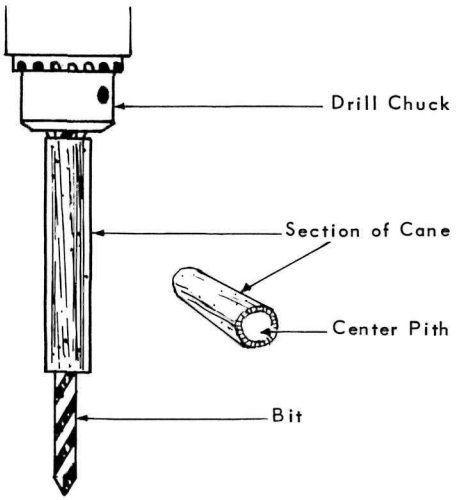

Although the dowel method is a good one, Don says that sometimes "woodgrain and human weakness" cause the bit to drift a little while making the hole through the middle, so that the thing comes out with a slight slant or drift. Last summer he found a naturalist's answer to the problem—he went across the road and picked up some dead cane which had a tapering diameter with holes right down the middle. All he does now is to cut a piece of cane of the length needed, hold it with a pair of pliers while he forces the turning drill down through the hollow core, and he's in business. If cane doesn't grow in your park, he suggests you get an old bamboo fishing pole. One pole will supply depth gauges for a long time.

Incidentally, we sometimes use an old spool from the wife's sewing basket to make a drill depth gauge.

HOW TO IMPROVE A MATTOCK

A mattock will be easier to handle if you grind a sharp edge on the upper side (toward handle) of the chopping blade. After the improvement is made, when the chopping blade becomes wedged a quick upward pull will usually release it.

This tool improvement idea came from Manager A. Wallin of Baraga State Park, Michigan.

When in doubt, tell the truth.
—Mark Twain

USEFUL SANITATION MANUAL

A clearly-written, easy to understand and very useful "Manual of Recommended Sanitation Standards for Tourist Facilities" has been put out by the Pan American Union in Washington and may be secured from that organization for 35¢ per copy. First published in 1960, it is a report of a special committee of the Pan American Health Organization, written in basic, down-to-earth practical style as we like to think GRIST is.

Information on how to secure and protect a reliable water supply, how to construct and maintain various kinds of toilet and bathing facilities, and how to construct various types of sewer systems including septic tank layouts, is included in the book. There are chapters on food handling, on safety and sanitation in building and maintaining swimming pools, on refuse and garbage disposal, and on insect and rodent control. There are some sketches and plans of about the same kind we carry in GRIST.

The book is intended for use in all countries of the Western Hemisphere and has been produced in both English and Spanish editions. It is packed full of very useful, practical information, well worth reading by any park supervisor especially those who must watch over the standards maintained by park or concessioner-operated eating and sleeping facilities. Although a good deal of the information may be known to park personnel in the United States, there are important reminders and fundamental facts worth a second look—such as the extensive table of simple-language explanations of how food handlers may cause various diseases to spread, and the figures provided on the sizes of septic tanks needed to serve certain numbers of people, or the figures provided on how many bathers per square foot of pool area may use a swimming pool without raising the bacteria count too high.

The book has some excellent check lists to use in inspecting tourist facilities in order to be sure good sanitation standards are maintained.

MARK YOUR MOWING HAZARDS!

You can protect your mowers and get extra use out of your bright-colored snowpoles by using the poles to mark stones, stumps, buried cable, fencing, or other obstructions encountered when mowing open fields.

I. J. Ellsworth, Superintendent of Saratoga National Historical Park, suggests that the operator carry a bundle of snowpoles on the tractor or mower, inserting one into the earth near each obstruction to designate it for removal prior to the next mowing or simply to be avoided if permanently in place.

I. J. points out that this system cuts damage to mowing equipment, saves time, and promotes mowing safety.

THREE-HOLE TOILET TISSUE HOLDER

There are a number of expensive gadgets on the market designed to hold two or more rolls of toilet paper, in order to make sure a supply is always on hand; but most of these devices not only cost too much but break down too easily to be used under rugged park conditions. So the staff at Myrtle Beach State Park, South Carolina decided to build a sturdy but simple box which will hold three rolls in a row, locked in place. One end of the box is hinged and carries a hasp for padlock.

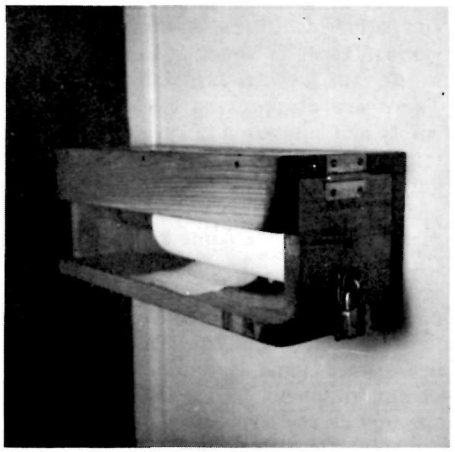

Ralph Anderson of West Hyattsville, Maryland, spotted the device on a visit to Myrtle Beach and brought back the photograph reproduced here.

LIGHTWEIGHT FIRST AID BACKBOARD

The American Red Cross and the U. S. Public Health Service both recommend that a stiff board or door be used to transport a person with back or neck injuries. Since in a park there may be no boards or doors handy for many a mile, park vehicles or stations used for first aid should have a lightweight backboard available, such as the one shown here, designed by Raymond E. Bright, District Park Ranger, Mount Rainier National Park, with improvements by William J. Butler, Protection Assistant.

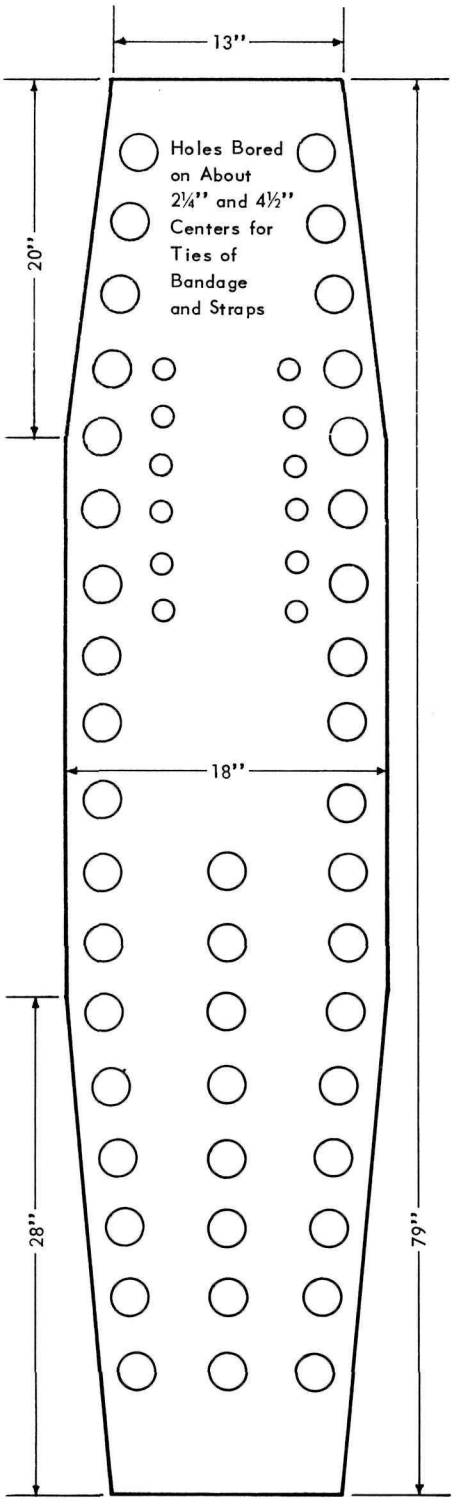

The straight board is made from 3/4-inch plywood and is 79 inches long, drilled with holes for bandages and straps. Edges of the holes and of the board itself are sanded smooth.

For carrying in mountain country or other rough terrain, a folding board can be made up. In this case, the holes must be so spaced as to allow for a cut across the center of the board. At the cut, heavy strap hinges are installed.

Especially for mountain use, either type of board may be made more useful if carrying rings are provided at each corner. About one foot from each end, a flat strip of iron is placed. This should be long enough to extend a couple of inches beyond the edges on each side and should be bolted in place. A hole should be made in each extending end of the iron strips and a large strong ring inserted. The rings will be useful as hand-holds or for attaching sling ropes when moving injured persons over cliffs or up or down steep slopes.

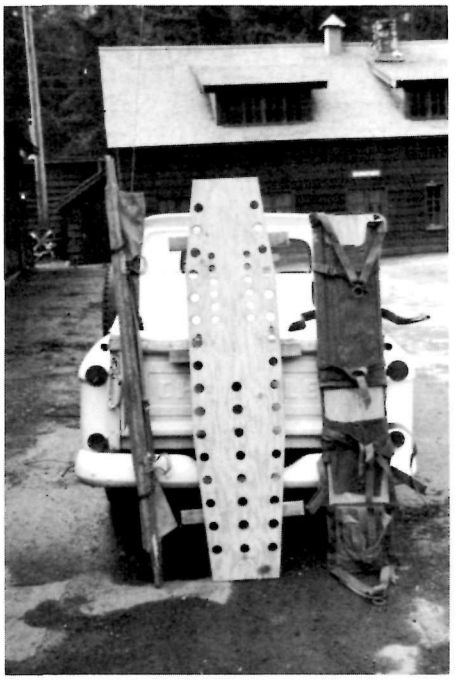

PATIO WALLS A LA CARTE

Looking for a pleasing way of sectioning-off patios, verandas, walks or paved open areas on a temporary basis? Pay heed to the idea dreamed up by Andrew Tzafferis (rhymes with Zaff-riss), Manager of one of Washington, D.C.'s finer restaurants, The Black Saddle. That's Andrew in the picture.

A recent ruling permits sidewalk dining in the Nation's Capitol, but the dining area must be defined and not interfere with sidewalk traffic. Andrew didn't like the idea of a portable fence or the usual standards and ropes, preferring instead real shrubbery.

So, he had a local iron works weld some heavy warehouse casters to a piece of flat sheet steel plate to make a platform about 15 inches wide by 6 feet 2 inches long. Then he had a bricklayer build a box with used brick 8 courses high on the steel base plate. The finished dimensions of his

out-size planters are approximately 6 feet long by 16 inches wide by 26 inches high. The base plate is not visible. The brick box is lined with sheet metal to hold the moisture in the soil around the plant roots.

When the sidewalk dining is done, he simply has these planters pushed back against the front of the building where they continue to serve as horticultural decorations. In use, they not only define an area but offer pleasant surroundings and some separation from passers-by.

They might well be used at park concession restaurants and to define paved areas for special purposes such as dances, games, etc., or to border walkways under certain conditions. The naturalist could use them to exhibit plants and flowers of the park, a natural tie-in with the park's nature program.

IDENTIFICATION HELP FOR SHUTTER-BUGS

Have you ever had arguements over where a photograph was taken, or what feature was shown in it?

Paul McG. Miller, Superintendent of Mammoth Caves National Park, helps his visitors identify, locate, and date their pictorial subjects. Putting the name of the park feature as well as the park on strategically placed signs, he assures photographers that names will be caught in some of their pictures. A quick check of their itinerary will give them the time or date.

VARI-TEMP WALL FAUCET

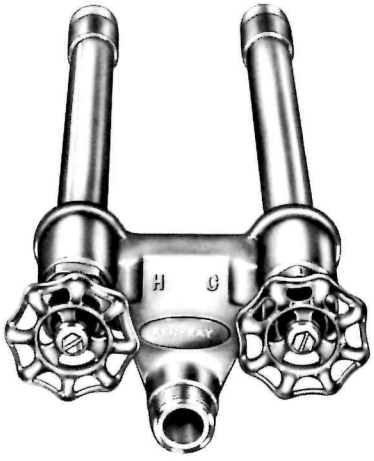

A new dimension in comfort, efficiency, and convenience has been added to the Ken-Ray Non-Freeze Outside Wall Faucet. Their new VARI-TEMP unit delivers hot, cold, and tempered water through a single hose connection for the multiplicity of outside chores where a choice of hot, cold, or tempered water is desirable; lawn care, car washing, pet washing, driveway cleaning, window and screen washing, filling wading pools—even "touching up" swimming pool water temperatures. Additional information is available from Ken-Ray Brass Products, Inc., Vermont, Illinois.

MAKING NYLON ROPE ENDS TOUGHER AND PRETTIER

The ends of a nylon rope can be made tougher and better looking if they are dipped in "Liquid Lucite", available at most hobby shops.

It will take about three dippings to do the job on the average nylon rope, says Milford M. Cook, a Painter at Sequoia and Kings Canyon National Parks; but once the liquid has set, the top ends may be hit with a hammer without showing any ill effects.

Milford points out that the Liquid Lucite also can be used to set any fancy kind of knot for display purposes.

COMPARTMENT-DESK FOR PATROL JEEP

Designed for a utility patrol jeep, but adaptable to several other types of vehicles is the between-seats compartment-desk designed by Ranger David Petticord of the Chesapeake and Ohio Canal National Monument. As the sketch shows, it is a simple plywood box on top of which a clipboard has been hinged, providing a combined desk surface and compartment top.

The reason Dave made his 7 by 10 by 12 3/4-inch box with a 9 by 13 1/2-inch standard clipboard on top was that his

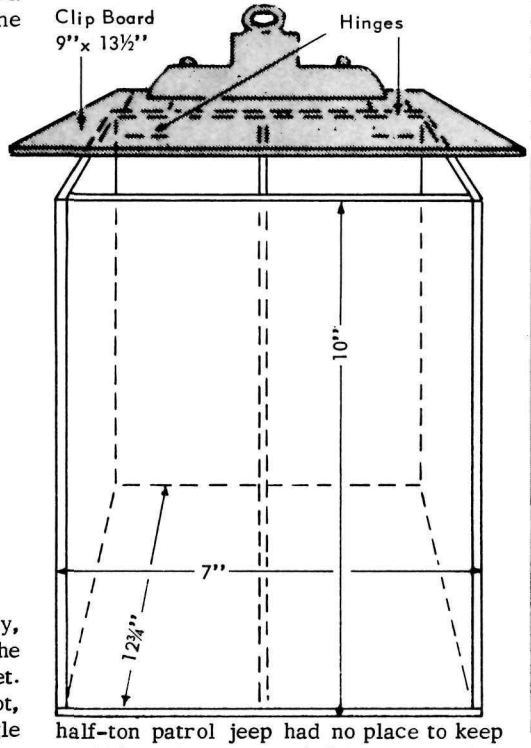

half-ton patrol jeep had no place to keep a clipboard, maps, park folders, accident forms or other papers needed while on duty. The jeep has no glove compartment.

In sending in Dave's design, Supervisory Park Ranger Robert W. Bell points out that the box-desk could easily be provided with one or two inside partitions to separate off various types of forms, allow for a flashlight or pencils or other objects normally carried.

COMPLETE FIGERGLASS OUTDOOR TOILET

Wooden privy seats and walls may be on the way out, for modern molded plastic has now invaded the field. All-Glas, Inc., P. O. Box 313, Lakeside, California offers for purchase or lease complete units of solid fiberglass construction in a variety of bonded colors, as well as a line of seats, urinals, etc. which can be incorporated into existing structures.

The fiberglass unit will not absorb odors, is contoured for easy cleaning, and, because of its high sanitary standards is readily approved by local health departments.

The complete unit is 42-1/2 by 42-1/2 inches, and 7 feet high—compact but adequate for the purpose. The chemical toilet has a 75-plus gallon capacity barrel and a 6-inch seat drop for complete odor control. Units may also be adapted for pit privy use.

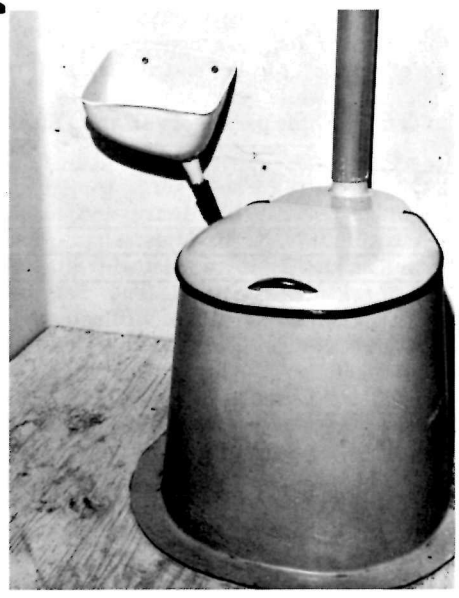

Maintenance cost is low, service time is decreased by ease of cleaning and in addition the unit may be moved easily, reducing the need for "spares." Quick knockdown and stackability reduces transportation costs when large numbers of units must be moved.

The public shows a great liking for the clean, sanitary appearance of these fiberglass toilets wherever they are used.

Speaking of Interpretation -

CARLSBAD SCIENCE SEMINARS

Chief Naturalist Dave Karraker at Carlsbad Caverns National Park reports that once or twice a month technical seminars on natural history are presented for employees and their families. The speaker is either a member of the park staff or a visiting specialist who presents an exhaustive analysis of his particular field of interest. Thus far, subjects have concerned the mechanics of reef formation, the living reef, cavern origin and decoration, the life history of the cave swallow, and the origin and distribution of Western conifers.

Normally, about thirty people attend these voluntary evening sessions. Meetings begin with a formal talk and the session ends following two or three hours of discussion over cookies and coffee. The only prerequisite to the conducting of one of these seminars concerns the subject matter which must relate to the natural or human history of the area. Also, to keep the program on a somewhat scholarly plane, small children are not invited.

Thus far, Naturalists Karraker and Ken Baker feel that the seminars have proven effective as training devices and wit-sharpeners.

We suggest that other parks would do well to emulate the Carlsbad people in this regard for this appears to be an excellent way for the entire park staff to 'socialize' while being stimulated by, and informed of, the park story all about them.

SOLDIER & BRAVE

Soldier & Brave: Military and Indian Affairs in the Trans-Mississippi West, Including a Guide to Historic Sites & Landmarks. By National Park Service. Introduction by Ray Allen Billington. Illustrated 279 pp. New York, Harper & Row. $6.50.

Soldier & Brave is the first of a projected series of volumes resulting from the National Survey of History Sites and Buildings, the National Park Service's study of physical remains of the American past from prehistoric beginnings down to the early 20th Century. The initial publication sets a high standard for those to follow.

The year 1890 saw both the official end of the American frontier and the last important armed clash between white men and Indians. The frontier advance and conflict with the Indians had been tragically interwoven from the time of the first exploration and settlement by white men.

National Park Service historians covered the West in the search for sites and buildings preserving the heritage left by soldier and brave. The most important of these historical remains have been declared eligible for the Registry of National Historic Landmarks—a form of recognition designed to encourage the continued preservation of such properties. In addition to the 21 eligible Landmarks described in the book, there are brief descriptions of many other sites noted in the Park Service's study of military and Indian affairs beyond the Mississippi, plus descriptions of historical areas administered by the National Park Service.

Soldier & Brave is much more than a guidebook to historic places. The background narrative, the descriptions of sites and buildings, dozens of contemporary and present-day photographs, and excellent maps are combined in vivid evocation of the past, as it was and as it can still be seen across the West. A selected reading list, notes on sources and an index add to the book's usefulness. Historians, students, tourists and, indeed, anyone interested in the American past will find Soldier & Brave a rich lode of information previously unavailable in so useful and attractive a package.

CONDENSED NATURE WALK

Folks who come to the Natchez Trace Parkway Visitor Center can have a nature walk even if the weather turns bad. Donald M. Black, Park Naturalist, has experimented for the past year with growing native plants in the Center.

One arrangement which has been very successful uses equisetum (or scouring rush), cane, wild grape, and driftwood. This live display was potted in the fall and is still thriving, although through the winter it received only a little late afternoon sun. The potting method is shown in the sketch. Best results could probably be attained, Don says, if there were a number of arrangements which would permit rotating them between the Center and natural outdoor conditions.

These native plants provide the opportunity to talk about plant medicines, folklore, edible plants, and export products of the area.

People who aren't able to take regular nature walks also appreciate this condensed nature walk and interpretation.

PUSH BUTTON TRANSPARENCY EXHIBIT

Mount Rainier National Park visitors especially enjoy the push button exhibit of color transparencies of the Park shown in the Longmire Museum. Park Superintendent John A. Rutter sent in a pair of photographs of the exhibit panel and the facts on how it was made up.

The transparencies used are from the Park's Kodaslide collection, enlarged to 5 by 7-inch size by a Seattle studio and mounted with frosted glass at the back and clear glass in front. Original slides were used for enlargement, but Superintendent Rutter says the transparencies are of such good color that it is hard to tell the difference from the originals.

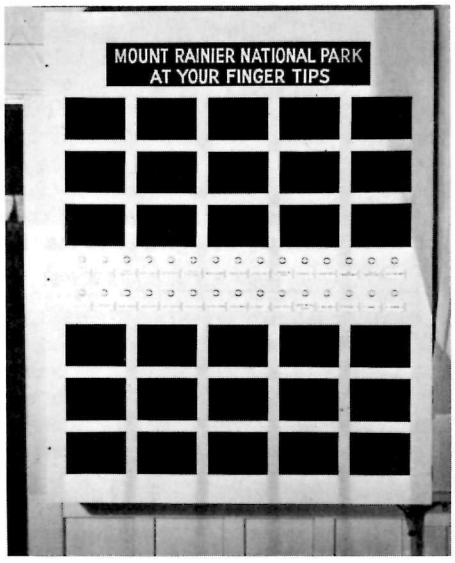

As shown in an accompanying photograph, the titles of the slides are placed by the push buttons. As the visitor presses the button beside the title, the corresponding transparency lights up.

The overall exhibit dimensions are 43 1/2 inches wide, 55 inches long and 7 1/2 inches deep. (The dimensions were set to fit available museum space and may be modified to fit any space.) The exhibit is constructed of 1/4-inch plywood, forming thirty individual light boxes mortised into the backing panel. Each light box, painted with a white paint into which a few drops of blue has been added, has its own 7 1/2-watt frosted bulb held in a sign receptacle. Each push button controls one of these lights.

The front panel was constructed from a single piece of 1/4-inch plywood, with light box openings cut to the exact size of the transparencies. This plywood was faced with tempered Masonite with openings 1/4-inch less than transparency size so that the transparencies can be held

in place with turn buttons or clips. The front panel is hinged to the light box assembly for easy access when replacing burned out bulbs or changing transparencies. As such a front panel is heavy, it requires either a piano hinge or several standard hinges.

The wire installed was No. 18 neoprene flexible "zip cord". A ground wire to all the push buttons and receptacles was installed first; then the hot lead-in pairs to the hot terminals of the buttons and receptacles. A master switch controls the fluorescent lamp assembly lighting the exhibit title and controlling the push button banks.

PROTECTING LOG SECTIONS ON DISPLAY

Log sections so often used to impress visitors with the great age of large trees are especially prone to severe, even ruinous, cracking or checking. Paul E. Schulz, Regional Naturalist, Southeast Region of the National Park Service, reports that there is a simple method of eliminating this difficulty with a new chemical available. Use Dow Chemical (Midland, Michigan, is one address) "Polyglycol E 1000", and soak the green timber in it at the time the section is cut for display. Repeatedly painting the green timber with this chemical compound is just about as effective as the soaking treatment.

FIELD INTERPRETATION WITH REAL-LIFE SPECIMENS AND SKETCH BOARD

George J. Knudsen, Park Naturalist with the Wisconsin Conservation Dept., uses plastic containers to hold small captured specimens for exhibit purposes on field trips with visitors. These containers are great for the squeamish person, he points out, and at the same time, protect the specimen which is released after the last person has had a look.

On nature walks he carries a small musette bag or fish creel holding a small and a medium-size shell vial or plastic capped preservative jar familiar to the biologist. Plastic is best since it does not break easily. He also carries a 4"x6"x1" plastic box similar to a fly box into which he puts small specimens. Small vertebrates and invertebrates can be comfortably housed in these, he says, without being harmed. The plastic box might be used to hold poison ivy or poison sumac leaves for a safe, close viewing by the visitor.

Another good point he makes is that it is easy to explain a point diagrammatically if you also carry along one of the inexpensive 'magic slates' familiar to almost every school child. This consists of a piece of stiff board backing, usually coated with paraffin, and overlayed with a sheet of pliable thin plastic. A quick sketch is made to illustrate a subject and then the 'slate' cleared by simply lifting the plastic sheet to free it of the paraffin coating. The 'magic slate' has certain advantages, George points out. It eliminates the need to carry a heavier clip board or large drawing tablet, the pages of which must be discarded.

ADVICE ON PLANNING A NATURE CENTER

How to stir up interest in the idea of a nature center, how to plan the center and establish an organization to support it, how to build the center and operate it, and how to keep interest up are all explained in the 87-page booklet just released by the National Audubon Society. Attractively illustrated and well printed, the booklet sells for $2. To secure one, send your check with a request for Bulletin No. 2 in the "I. E. Series" published by the Nature Centers Division, National Audubon Society, 1130 Fifth Avenue, New York, New York, Zip Code 10028.

Byron L. Ashbaugh, Associate Director of the Nature Centers Division, writes that the bulletin is "designed to help private and public organizations in towns, cities and states in their efforts to plan and establish islands of green in and around their urban environments for recreational, educational and cultural purposes."

CUTOUTS SPICE MUSEUM DISPLAYS

To add interest to museum displays of small items, Mac Frimodig, Region One Naturalist of the Michigan Division of Parks and Recreation suggests using cutout backgrounds in color.

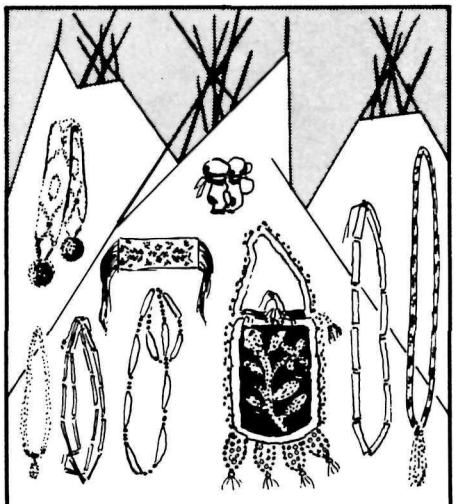

Jewelry of the Chippewa Indians

As the sketch shows, Indian jewelry can be displayed against cutout wigwams made from masonite and painted in soft flat colors. For mineral specimens, Mac has used cutout "mountains". Using your imagination, you can devise shapes to accompany almost any object.

EFFECT OF USING STYROFOAM AND PARADICHOLOROBENZENE TOGETHER IN MUSEUM EXHIBITS

Donald M. Black, Park Naturalist, Natchez Trace Parkway, reports that paradicholorobenzene, which they use in museum cases as a fumigant, damages the styrofoam used in some of the cases. The styrofoam loses its porous quality, becomes discolored and buckles. The farther away from the crystals, the less the deterioration, but the greater the curling upward.

This is our country. All we have and all we are we owe to it, so let us think more of our duties and obligations than of our rights and privileges.— Richard Lieber

INTERPRETATION FOR CHILDREN

From 'Interpretive Notes', publication of the Southeast Region, NPS, we learn that some of the following was gleaned from a Western Region regionwide discussion.

Children as young as 5 years old are receptive, however, they have very short interest spans. They like to ask questions and to answer them. They have limited vocabulary and experience but live in a world of half fantasy and make believe, and so have a high level of interest in many natural history subjects. To successfully interpret to young children requires special interest and training on the part of the interpreter. Pronounced in 1957, one of Freeman Tilden's six basic principles of interpretation is "Interpretation addressed to children (say, up to the age of 12) should not be a dilution of the presentation to adults, but should follow a fundamentally different approach . . .". Quite true, and one can't start too early to instill a love and appreciation of the out-of-doors and a conservationist attitude.

One valid objection to special youth craft and interpretation programs is the free baby-sitting service aspect which some parents exploit. It must be admitted though that the children of people with that attitude are getting from such services, values and attitudes of which they have greater need than do the offspring of more conscientious parents. Discouragement of the baby-sitting problem may be accomplished by requiring an adult to accompany the child or children of each family attending. This in turn may breed other problems, however. The question is, can we at our present still sadly undermanned interpretive staff levels afford the extra time and money required for special interpretive operations for juveniles? Children of 10 or older should be able to benefit from and enjoy the standard interpretive program if it is of the quality and the character that it should be.

RAISING SPRAY BAR ON ROAD OILER

The photograph shows an improvised method for improving the raising and lowering of the spray bar on a road oil distributor through use of an old car jack combined with two lever arms. Mayo O. Zabriskie, Mixed Gang Foreman in Grand Canyon National Park sent the idea in with the explanation that the spray bar originally came with a threaded eyebolt

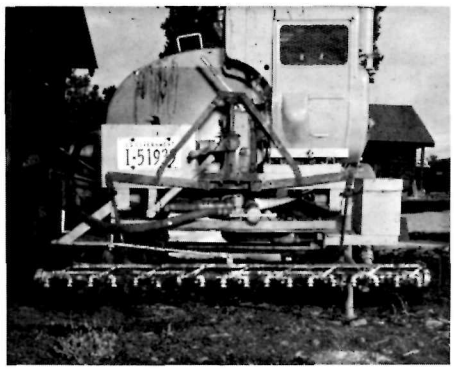

and chain attached, so that raising and lowering was done by turning the nut on the eyebolt, a slow and difficult job.

Mayo got hold of an old car jack, had it modified to take a crank handle, and attached lever arms so that by turning the crank he could rapidly raise or lower the bar. He says that control is more positive and that work goes much faster when the improved device is used.

USING VACUUM HOSE ON ROUTER

That sawdust that piles up so fast around a router will no longer get in your nose, your hair and your work if you attach to your router a suction hose running from a vacuum cleaner nearby. As Dr. Fred C. Galle, Director of Horticulture at Callaway Gardens, Pine Mountain, Ga. writes, the only special item needed is an adapter which can be made in your own shop or by anyone who can work with sheet metal (see photograph). Even the

metal from a large tin can could be bent and soldered into the necessary shape, although use of slightly heavier sheet metal is desirable.

The router shown bears the Stanley brand, and the adapter has been attached in place of one handle. The attachment and hose assembly serves as one handle of the router.

Fred says that in his sign shop they suspend the vacuum hose from a flexible spring to keep it up off the board, so that it has no drag.

MORE COLOR FOR YOUR PARK

If you believe all blacktop pavements must remain black forever, you're in for a pleasant surprise. A tough vinyl plastic coating that can be applied to existing blacktop is now available in grass green, brick red, and concrete gray.

This new product, called Vynatex 23, can easily be applied by regular maintenance personnel. In addition to providing an attractive, easy to clean colored surface, Vynatex 23 will prevent oxidation, sun-drying, and frost damage thereby making the pavement last longer.

A descriptive brochure and complete information may be obtained from Maintenance, Inc., Wooster, Ohio.

All work and no play makes Jack.

CUT GRASS AT 36 MILES PER HOUR

Something new in the way of a fast-moving, self-powered grass and weed mower was demonstrated earlier this year to National Park Service officials near Washington, D.C.—the Grassmobile, made by the Mono Manufacturing Company, P.O. Box 948, Springfield, Missouri. The machine might be mistaken for a jeep at a distance, but as the photograph shows, close up it can be seen to be a 60-inch rotary mower riding under a sturdy four-wheel frame.

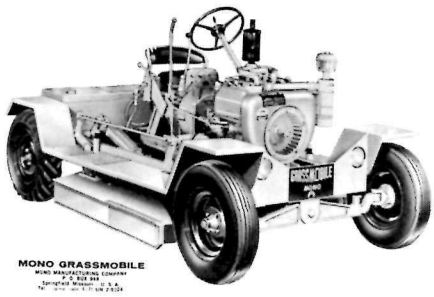

The extra low center of gravity and automotive-type steering allow for safe cutting on slopes and grades not possible with most powered equipment. Cutting heights can be adjusted from two to ten inches instantly by hydraulic power by the operator, without stopping or even slowing down.

The manufacturer states that the 30-horsepower, 4-cylinder air-cooled Wisconsin engine gives plenty of power for any type of cutting, with speeds up to 36 miles per hour. The tractor-type transmission has four forward speeds and reverse.

The blades are free swinging and covered by a completely enclosed steel housing, making mowing of litter-strewn and rocky areas safe even in congested areas. Thus, the Grassmobile is especially good for mowing along highway rights-of-way.

NO-SPIKE TREE CLIMBERS

The regular "leg irons" used for climbing poles and trees can do a lot of "spike hole damage" and therefore park men who specialize in tree care usually avoid using the irons if possible. Now a substitute is available which will not damage trees—"Swiss Tree Climbers", made by Forestry Suppliers, Inc., P. O. Box 8397, Jackson 4, Mississippi.

Although the Tree Climbers had been used on a variety of types of trees, they had apparently never been tried on coconut trees until Russell A. Apple, Superintendent of the City of Refuge National Historical Park In Honaunau, Kona, Hawaii had them tried out in his park. Coconut palms are easily damaged, but they were unhurt by the new devices, he says. The photograph he supplied shows Larry Sasaki using the Swiss Tree Climbers.

The equipment is priced at $249 a set, but appears to be sturdy enough to last indefinitely.

RANGER 'RED' sez:-

"There's a good tongue 'n each of our shoes that never gits our feet in trouble."

Jim Burnett & IBL