U.S. Department
of the Interior

National Park
Service

Grist

May/June 1981
Volume 25/Number 3

Floating Breakwaters—Flexible, Inexpensive, Increasingly Popular

Even in the best natural harbors, some supplemental protection from ocean swells, waves, wakes, and local tide conditions usually is needed. Increasingly, recycled tires are answering this need.

A floating tire breakwater costs a mere fraction of a fixed rubble pile breakwater. And there are billions of scrap tires throughout the world suitable to recycle in this way. Nontoxic and relatively easy to move, floating tires work as breakfronts in places where water depth prohibits a fixed system. They form natural fishing reefs and their resiliency makes them safe for small boats.

Recent tests by Goodyear Tire and Rubber Company and the University of Rhode Island found a reported efficiency of 80 percent obtained with a structure 20 to 26 feet (6 to 7.8 m) wide, in waters with 3- to 4-foot (90- to 120-cm) wave heights. Testing by the U.S. Army Corps of Engineers also concluded that a structure 105 feet (31.5 m) wide would attenuate 6 to 8-foot (1.8- to 2.4-m) waves by 80 percent.

Tim Sutherland of Topper Industries, Inc. in Vancouver, Washington, offers the following dimensions and cost considerations for tire breakwaters as general guidelines.

Usually a floating tire structure starts with modules of 20 tires each. These are formed into a larger, diamond-shaped module measuring approximately 7′×7′ (2.1×2.1 m). For a 26′ (7.8-m) wide structure, this translates to 11 tires per lineal foot. A 1,000′ (300-m) long breakwater would require 11,000 tires. The tires are fastened together with special corrosion-resistant material, then the diamond-shaped modules are attached to one another.

In anchoring the tire breakwaters, you must consider soft and rocky bottoms, tidal fluctuations, predominant wind direction, and many other factors. However, most costs can be calculated on average conditions, moderate tidal fluctuations, 30- to 40-foot (9- to 12-m) water depth, and typical sandy-muddy bottom.

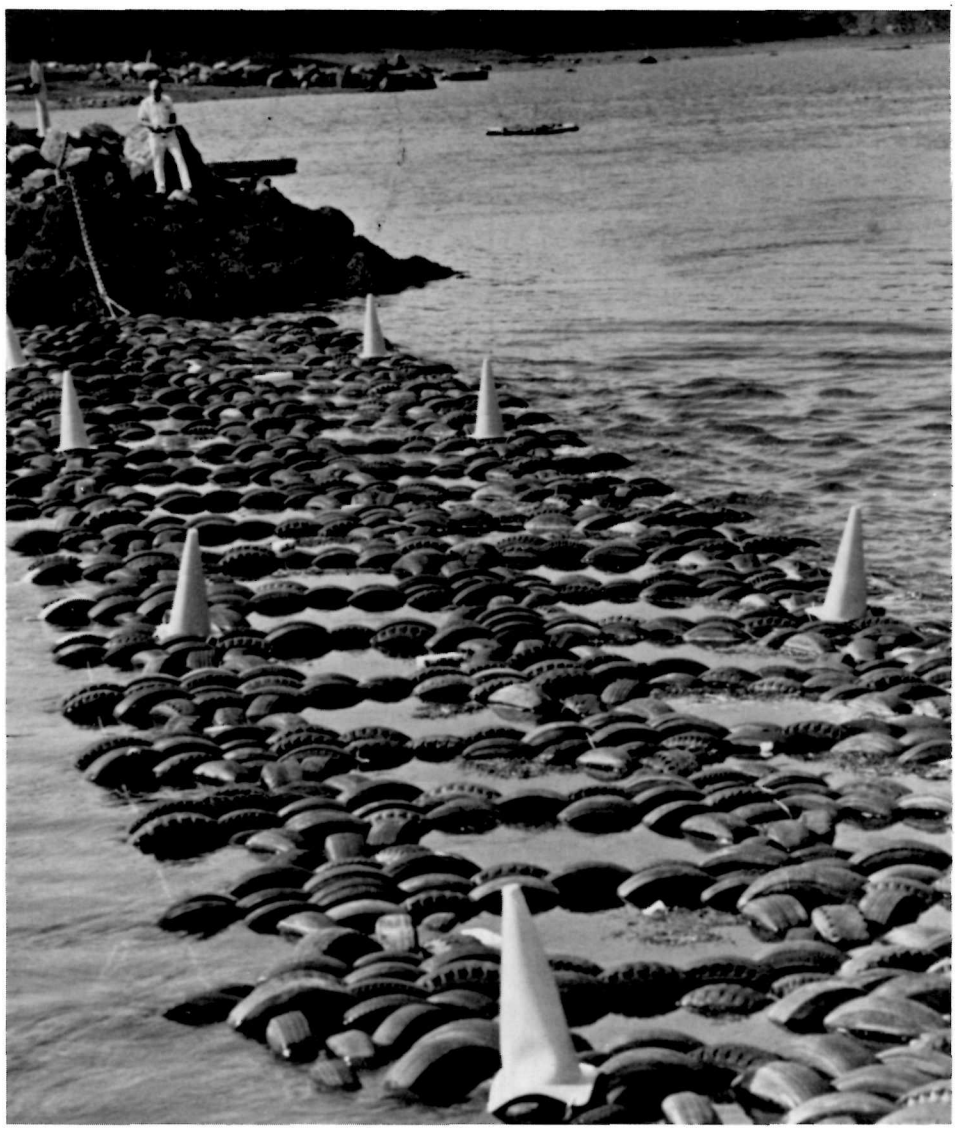

Photo: Topper Industries Inc.

Although scrap tires cost little, their acquisition and transportation does involve some expense, as does constructing the module. Tying materials, anchors, hardware, and chain represent the bulk of incurred cost.

Construction of a 1,000-foot (300-m) breakwater from scrap tires should run between $150,000 and $175,000, and a 500-foot (150-m) structure would cost about half. A comparative rubble pile breakwater, however, would cost about 2½ times more.

In other words, the savings on a 1,000-foot (300-m) length of floating breakwater would be around $225,000—enough to finance moorage facilities for 200 to 300 boats!

This article was sent by Jerry Martin Associates, 1300 Skokie Highway, Gurnie, Illinois 60031.

Safety and Security

Grist

A publication of Park Practice
Park Practice is a cooperative effort of the National Park Service and the National Recreation and Park Association.

Russell E. Dickenson, Director
National Park Service

John H. Davis, Executive Director
National Recreation and Park Association

Editorial Staff

National Park Service
U.S. Department of the Interior
Branch of Professional Publications
Division of Cooperative Activities

Frank C. Goodell, Program Manager

James A. Burnett, Editor, *Design* and *Grist*

Kathleen A. Pleasant, Editor, *Trends*

Contractors to Park Practice

Maureen Palmedo and Associates, Consulting Editors, *Trends, Grist, Design*

District Lithography Company, Inc. Printer

Park Practice includes: *Trends*, a quarterly publication on topics of general interest in park and recreation management and programming; *Grist*, a bimonthly publication on practical solutions to everyday problems in park and recreation operations; and *Design*, a quarterly compendium of plans for park and recreation structures which demonstrate quality design and intelligent use of materials.

Membership in Park Practice includes a subscription to all three publications and selected back issues in vinyl binders with indices and all publications for the calendar year.

Articles, suggestions, ideas and comments are invited and should be sent to Park Practice, U.S. Department of the Interior, National Park Service 440 G Street, NW, Washington, DC 20240.

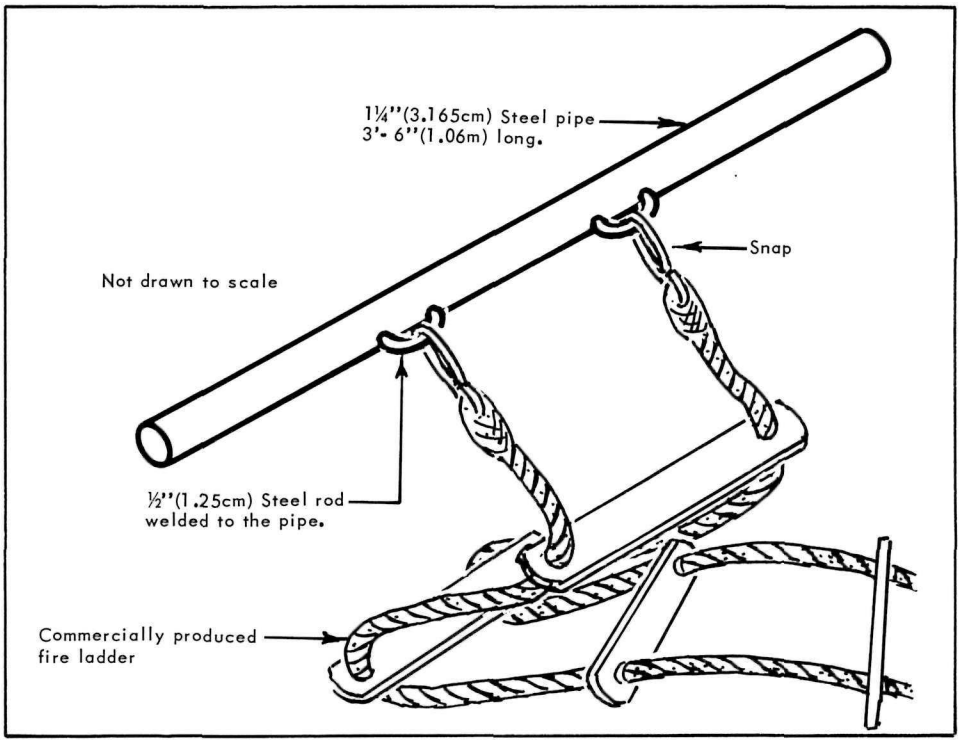

Making a Fire Ladder Portable

Here's an ingenius modification that makes a standard rope fire ladder portable and safer to use.

Maintenance worker Dennis Walker and park technician Keith Frutchey, of Herbert Hoover National Historic Site in Iowa, fabricated a portable anchor bar that makes a rope ladder usable in almost any window opening. The anchor bar is a simple 3½-foot (1.05-m) long section of 1¼-inch (3.125-cm) steel pipe with a loop of ½-inch (1.25-cm) steel rod welded to the pipe 1 foot (30 cm) from each end. The snaps of the rope ladder are attached to the anchor pipe through the two loops.

Designed for a 30-inch (50-cm) window opening, the anchor bar with attached rope ladder is placed across the inside of the window with ½ foot (15 cm) of the bar extending beyond each side of the frame. When the rope ladder is lowered through the window, its weight holds the anchor bar firmly in place against the window frame. If necessary, the bar can also be used to knock out a window pane.

A few notes of caution: be sure that the spot welds, which anchor the steel rods to the iron pipe, are strong enough to support the necessary weight. Also, the units should be checked frequently for rope abrasions, cuts, or other damage. If nylon climbing rope is used, keep the unit away from any petroleum products because contact with them can cause serious corrosion of the rope.

Securing Revolvers

The securing of revolvers is a crucial safety concern anywhere. At Natural Bridges National Monument in Utah, revolvers used to be stored loose in a cabinet in the visitor center with trigger locks attached. The only security was a small cylinder lock with a 1/8-inch (.3125-cm) thick locking blade mounted to the cabinet door locking into the door frame.

Then maintenance worker Steven B. Riley came up with a better way. Riley installed a "jimmy-proof" dead-bolt lock to the door, with access to keys restricted to authorized personnel only, and bolted a steel, locking bolt through the back wall. The three-sided box is made of ¼-inch (.625-cm) plate steel with reinforced corners and all-welded construction.

Revolvers and other items needing security can be slid onto the hinged bar, which then can be padlocked closed. The bar has a hard surface, so it cannot be filed or sawed, and is rubber coated to prevent scratching. Since the bar measures 5/8 inch (1.562 cm) in diameter, regular bolt cutters will not fit around it. The padlock is installed so that both shackles would have to be cut to free the bar, and one shackle is located so that bolt cutters can't reach it. The hinged end of the bar slides through a length of pipe. A cape is welded on the end, then the pipe is welded to one of the box's side walls. The entire assembly is bolted through a 6-inch (150-cm) thick wall, into the back of another cabinet, with four 3/8-inch (.9375-cm) diameter bolts with breakaway heads, which are threaded into a ¼-inch (.625-cm) steel plate in the other cabinet. This makes it virtually impossible to remove the entire box, since there are no bolt heads to cut or grip in any way.

In addition to increased security for revolvers and other dangerous items, this setup lets an agency control the personnel who have access to both the cabinet and the revolvers.

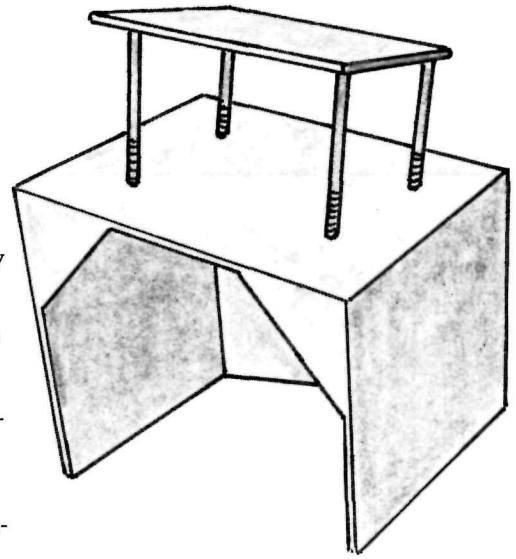

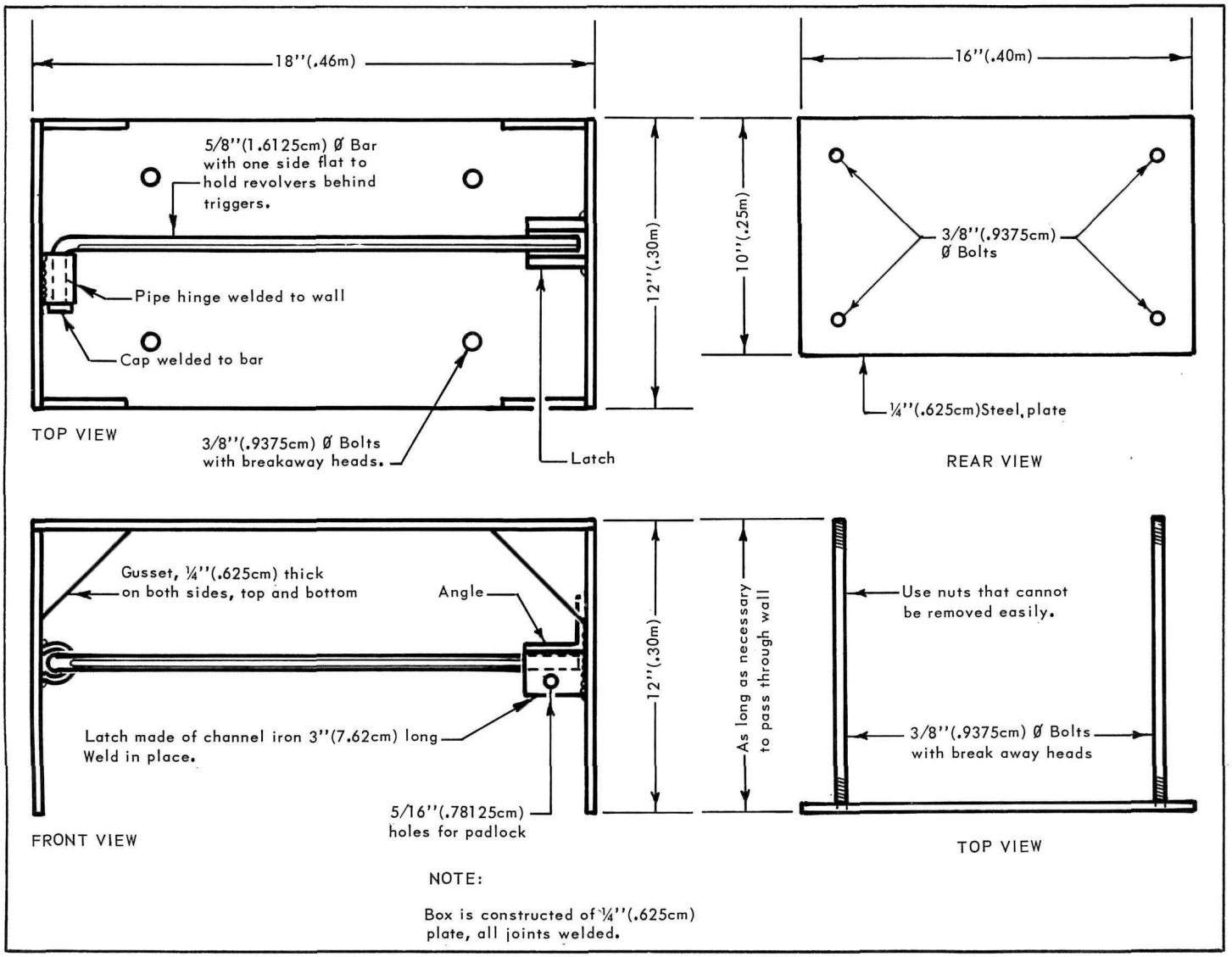

On the Trail

"Trail Saver" Trough

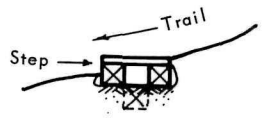

SIDE VIEW

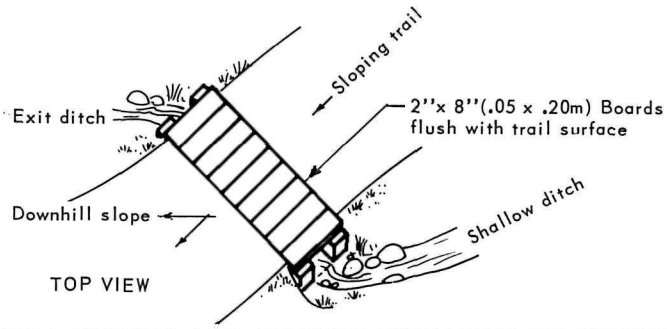

TOP VIEW

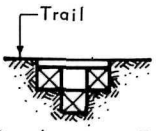

Tie placement—For a wider trough, use 2 bottom ties.

SIDE VIEW

For years it was difficult to maintain the trails in the Taylorsville Reserve section of the Dayton-Montgomery County (Ohio) Park District. The rolling, to rugged woodland terrain of the 1,200-acre (480-ha) reserve along with the sloping valley of the Great Miami River, which bisects Taylorsville, creates severe erosion problems. After heavy rains or snowmelt, the trails would wash out, even those covered with gravel or reinforced with conventional checking systems.

After experimenting with several water diversions, Ralph Gebhart, park superintendent at Taylorsville, developed a trough system that really works—even in this area of sloping trails subjected to heavy rains. The system is made from 6-×9-inch (15-×22.5-cm) railroad ties topped with 2-×8-inch (5-×20-cm) oak boards, spaced ¾ inches (1.875 cm) apart, placed across the trail flush with its surface. The ties are placed in the ground and the oak pressure-treated boards are nailed down with 20-penny ring shank nails. A small ditch dug along one side of the trail feeds runoff water into the uphill end of the trough. An exit ditch at the other end carries water away from the trail system. Flat rocks are placed in the ditch at both the trough entrance and exit. Water flowing down the trail falls through the boards and is carried away too. This feature makes the design a big improvement over tile.

The trough is easy to construct and has effectively eliminated trail washout. The park district now plans to use this system in other rugged trail areas.

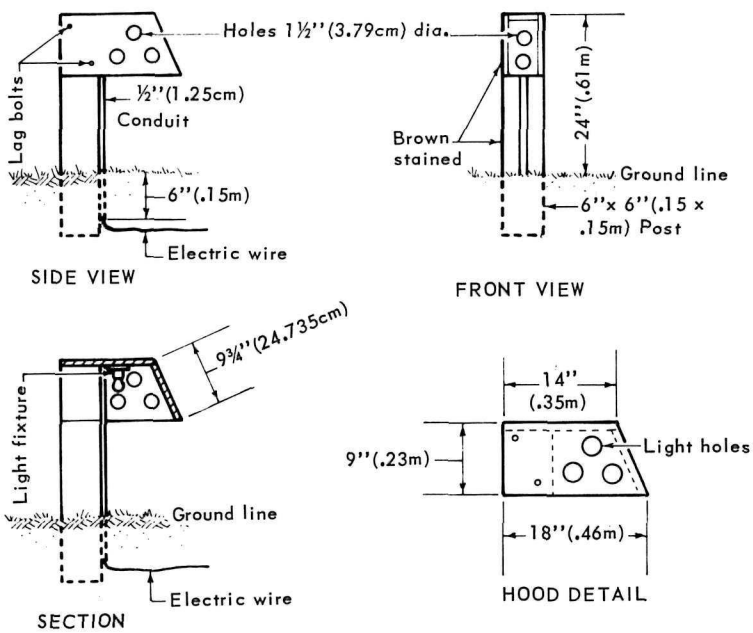

Trail Lights

These trail lights, from the *Arkansas State Parks Design Standards Manual,* can be modified to meet the needs of virtually any area.

The post and hood are rough-sawn treated pine. The hood is fastened to the post by 1½-inch (3.75-cm) lag screws.

The electrical wire should be run up the front of the post through a ½-inch (1.25-cm) conduit. The conduit should be at least 6 inches (15 cm) below ground level.

The light fixture specified is a "satin aluminum wall light," 6½ inches (16.25 cm) high, 4½ inches (11.25 cm) in diameter, and 4½ inches (11.25 cm) deep. A frosted light bulb of either 40 or 60 watts can be used. As a final touch, the trail light is stained brown.

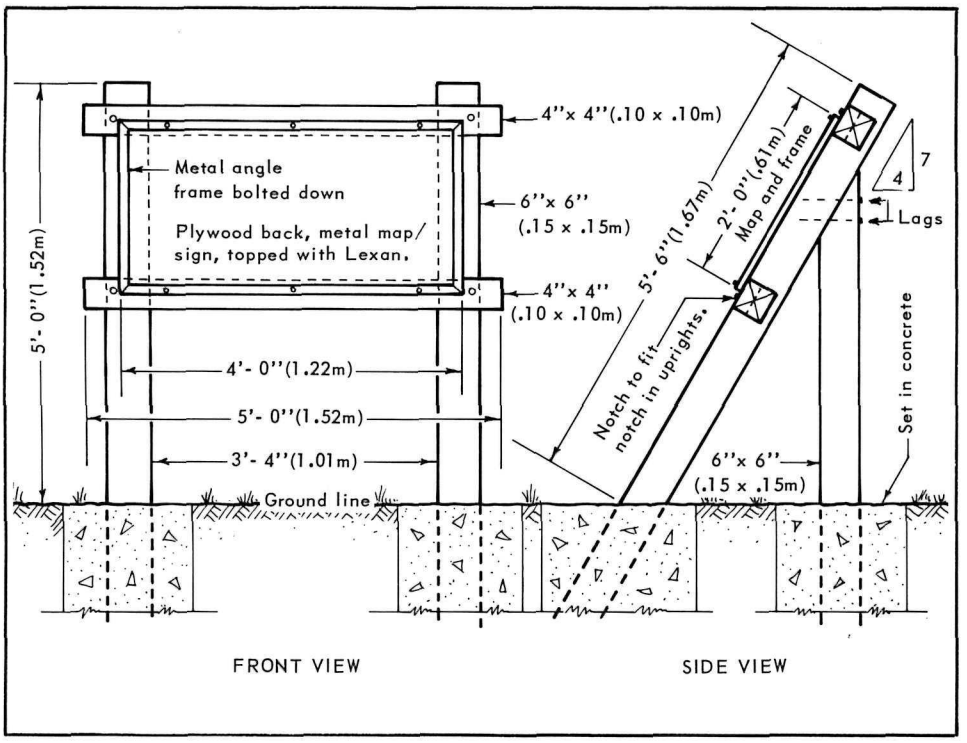

Sign Frame to Protect Trail Maps

Shielding trail maps from the elements and careless visitors poses a problem for many parks. Dominic Costello, superintendent of Starved Rock State Park in Illinois, shares one solution.

Costello, along with rangers Robert Kleczewski and George Klieber, designed this sign frame to protect posted trail maps. A metal map is enclosed in Lexan with a metal angle iron frame, bolted through 4-×4-inch (10-×10-cm) treated posts, and attached to 6-×6-inch (15-×15-cm) treated posts concreted in the ground.

Heavy Duty Trail Closure Signs

Another design for a Lexan trail sign comes from Robert J. Isdahl, park ranger at Glacier National Park in Montana. His version uses two 1/8-×10-×13-inch (.31-×25-×32.5-cm) pieces of Lexan to sandwich various plastic warning signs.

The two pieces of Lexan are held together by four ¼-×½-inch (.062-×.125-cm) bolts, one in each corner. The bolts also hold the warning sign secure by preventing it from falling from the holder or being removed easily by a visitor.

Two copper pipe hangers—U-shaped plumbing supply used for hanging ½-inch (.125-cm) copper pipe—suspend the sign. The hangers slip over the Lexan and are attached by the upper bolts. A length of parachute cord is run through the hangers to suspend the sign from trees or posts.

The sign can be replaced or changed simply by removing the four bolts. The Lexan provides a clear, unbreakable plastic protection that is not affected by weather.

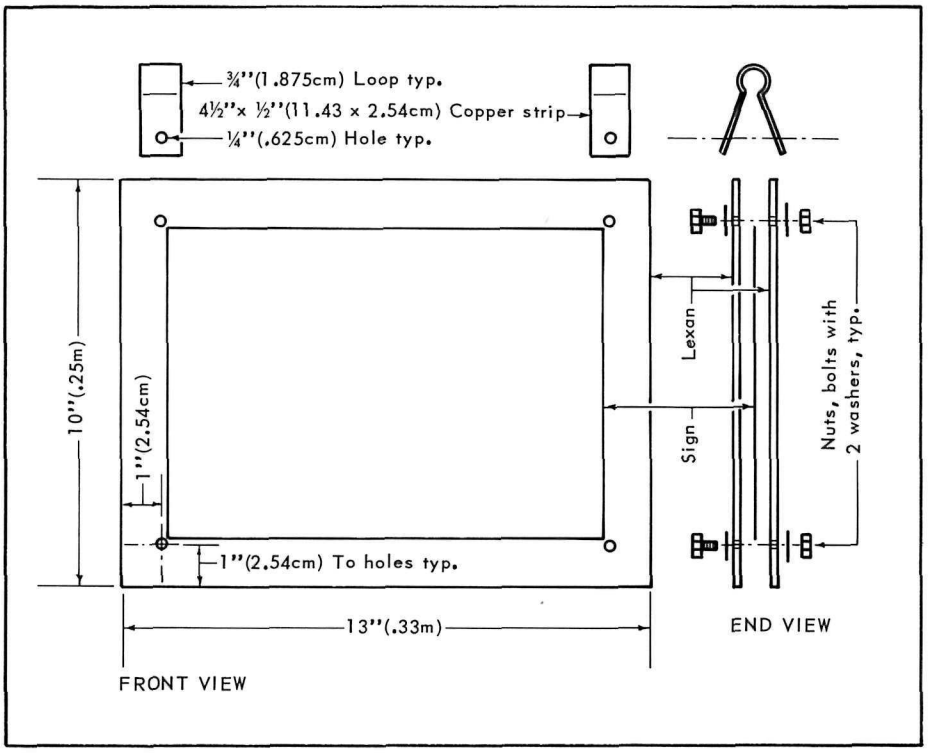

Near the Water

Making a Small Boat Portable

Philip Lovely of the U.S. Fish and Wildlife Service in Denver has figured out a good way to make small boats portable.

Lovely and his colleagues use a small boat to collect samples from the various ponds at his laboratory. It formerly took two people to haul the boat from pond to pond. Steep embankments between ponds made the job difficult and dangerous. The rough handling caused the boat to become worn on the bottom and it needed repairs too often to suit the staff.

Lovely solved the problem by adding bicycle wheels to the boat. Now one person can tow it safely and simply.

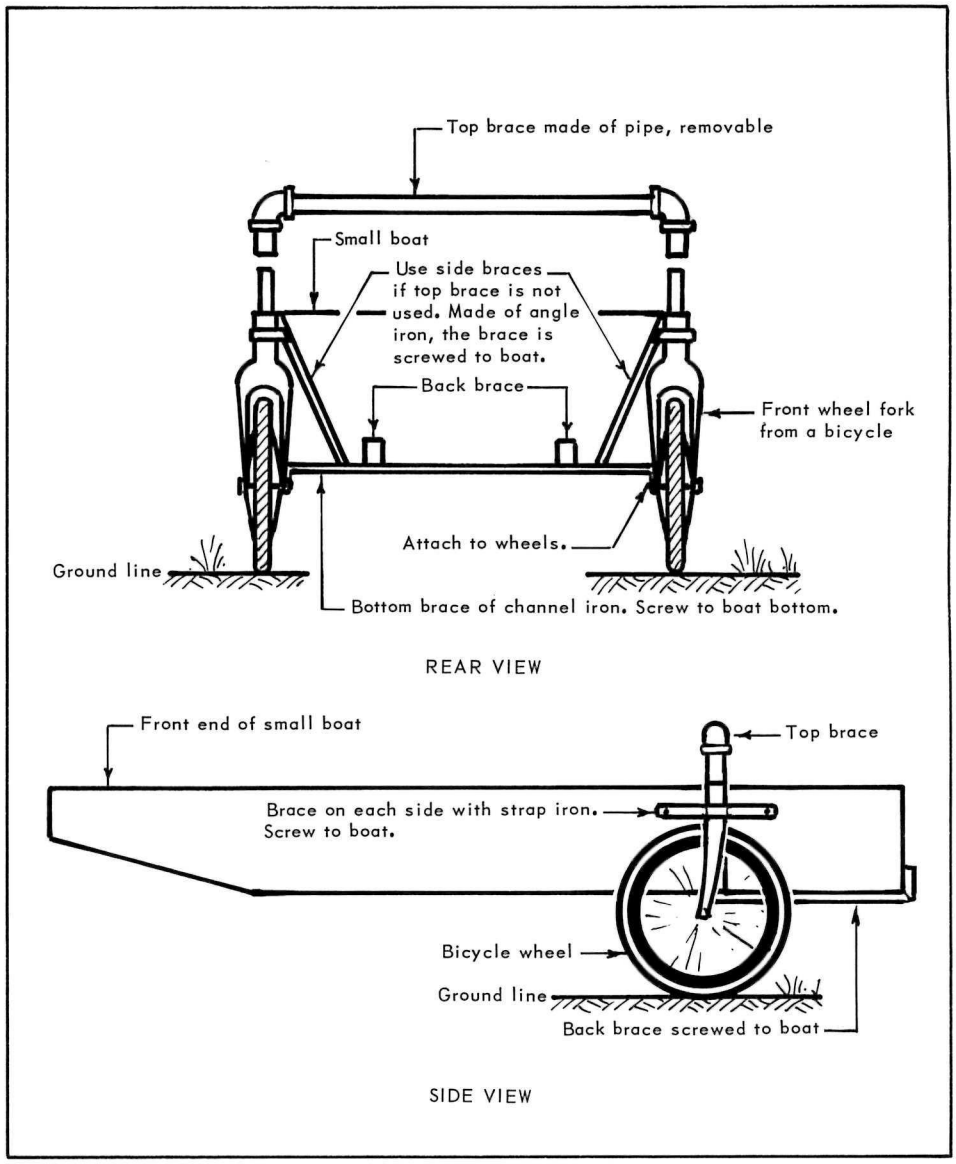

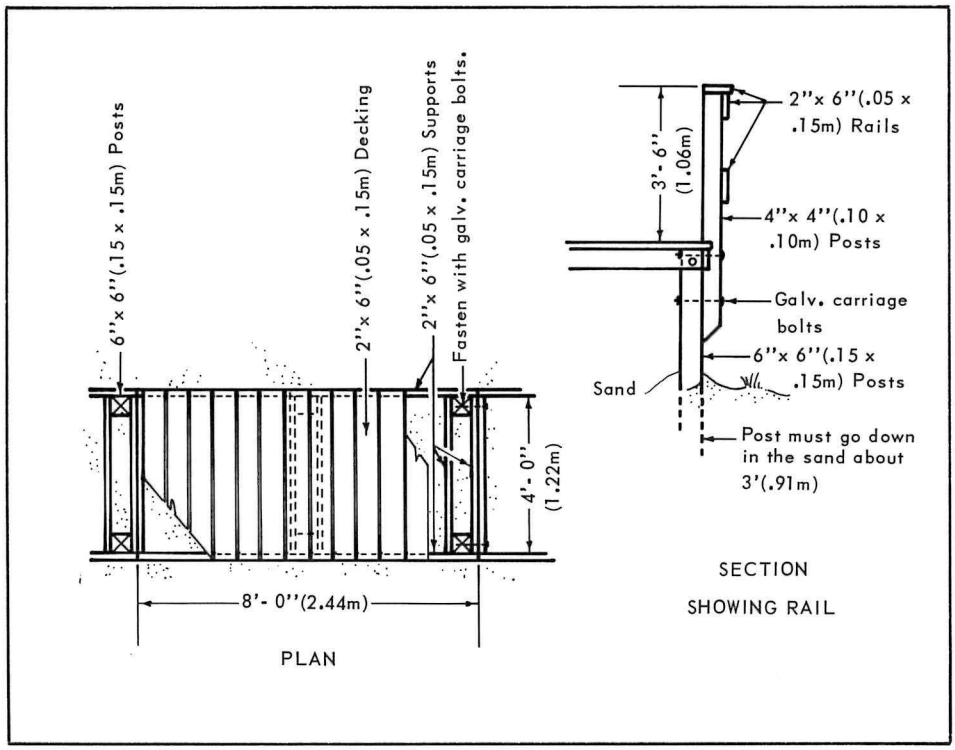

Modular Boardwalk System

Tim Priegel, designer/planner for the Norfolk, Virginia, Department of Parks and Recreation, shares a modular boardwalk system he designed recently for the Youth Conservation Corps (YCC) and Young Adult Conservation Corps (YACC) programs in his city.

The modules are built of salt-treated lumber and use all galvanized nails and fittings to withstand the heavy wear of a saltwater beach environment. Simple and relatively inexpensive to construct, the system can be expanded as needed.

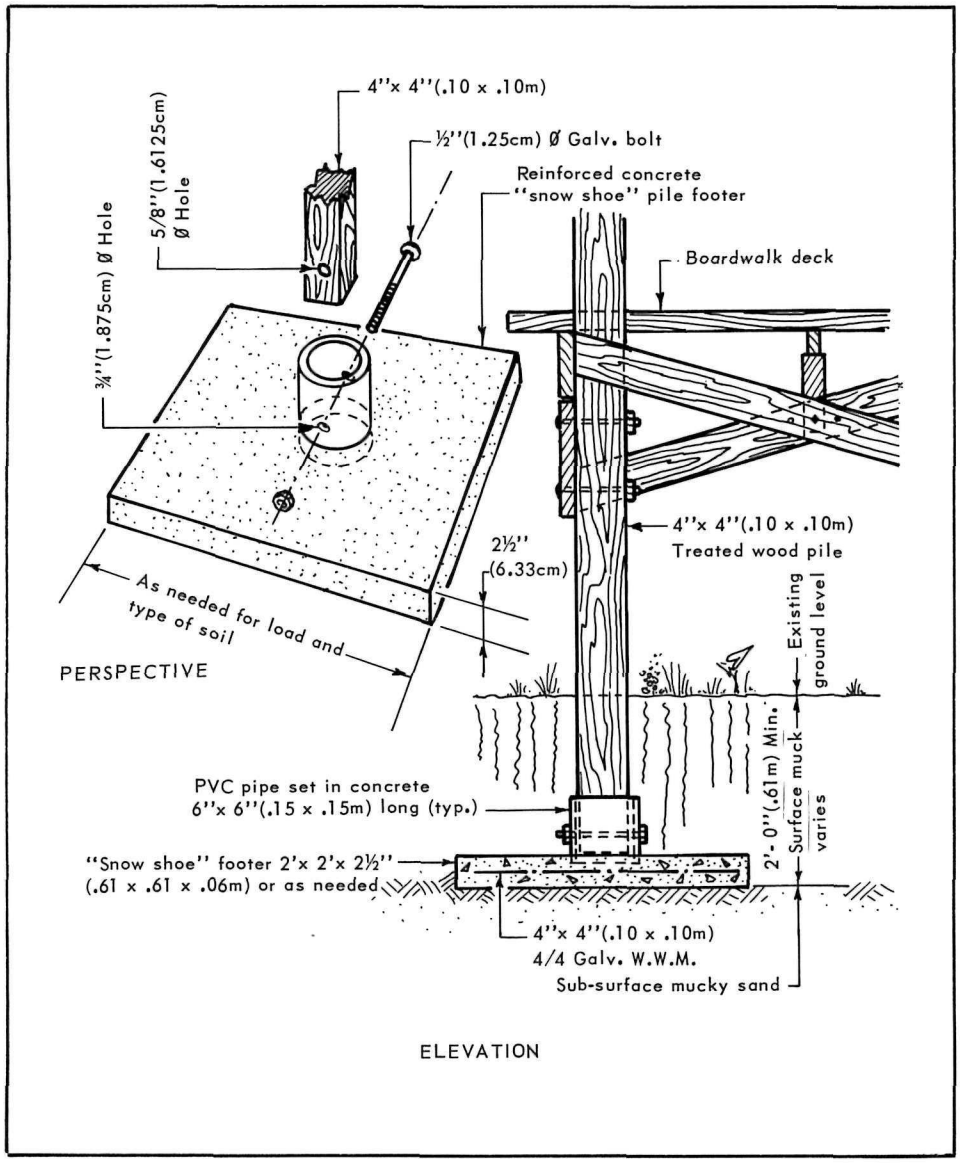

Landing Platform for Steeply Sloping Boardwalk

Richard J. Hanks, supervisory park ranger at Canaveral National Seashore in Florida, suggests a simple way of improving visitor safety on sloping boardwalks.

The Playlinda boardwalks at Canaveral, Hanks notes, run straight down from the dune ridge, ending directly on the edge of the road. Momentum is built when walking down the boardwalk, and it tends to carry people—particularly children—right out onto the road. The steeper the slope, the more difficult it is to stop.

For sites like these, Hanks recommends adding a landing platform to the end of the boardwalk. The platform should be a level landing ramp, exiting to both sides, thereby requiring a shift in a person's movement. Such platforms should prevent accidents and enhance visitor safety.

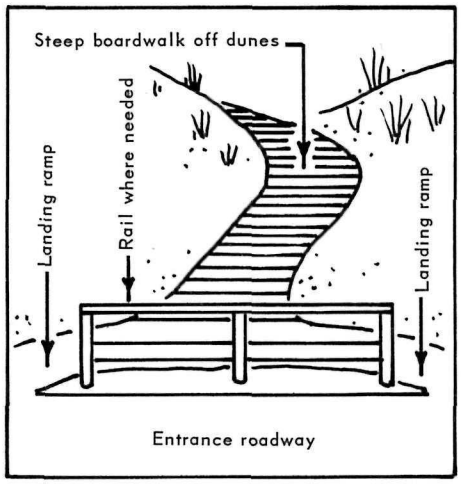

"Mud Shoes" Make Innovative Boardwalk Foundation

How about using the snowshoe principle to save money in pile foundation design? "That's essentially how the Parks and Recreation Division of Broward County, Florida, supports its elevated boardwalks through marshlands in several parks, reports Raul Mora.

The agency needed boardwalks to transport people over muck deposits that ranged from 4 to 16 feet (1.2 to 4.8 m). Normally, piles of sufficient length to attain the expected load carrying capacity are driven into the ground by bulky machinery. For a given load, the length that the piles are driven into soft ground depends on the friction bond that develops between the pile and the surrounding material. In Broward County, the length required was very long. The cost of the extra-long pile needed and the expense of renting the machinery to drive the piles were beyond the park system's budget.

To save money, Mora and his staff supported the boardwalks on short piles that extended only about 2 feet (60 cm) into the ground, deep enough to clear tree root systems and other marshland vegetation. The tips of these short piles, however, rest on concrete slabs or "mud shoes" that act the same way as snowshoes.

A square, thin, reinforced concrete slab was designed to act as a "mud shoe" and support the end of the pile on top of the soft mucky sand ground. The theory behind this approach is the same used in snowshoe design. A single large load concentrated at one point punches easily through a soft material. If you spread the same large load over a large enough area of soft material, the load will just float over the material and will not penetrate it.

Construction procedures followed this sequence: 1) the top layer of pure muck and vegetation was removed by hand shovel; 2) a large enough level area was prepared to receive the concrete slab; 3) the precast concrete slab or "mud shoe" was placed and aligned by hand on top of the mucky sand material; 4) the pile end was positioned inside the plastic pipe ring on top of the surface of the slab so that it did not slip out of place; 5) the muck that was first removed was placed back on top of the "mud shoe" slab and around the pile; 6) the pile was fastened to the main boardwalk structure, and the boardwalk construction continued to the location of the next pile.

An important bonus of this money-saving idea was the preservation of the thick canopy that nature had created. There was none of the damage that large equipment inevitably would have left.

Now the boardwalks tunnel beautifully through undisturbed vegetation. They seem to belong, rather than add, to the environment. And all this at less expense!

Safety Hazard Form

Park technician Michael D. Smith and administrative technician Mary M. Giesecke of Abraham Lincoln Birthplace National Historic Site in Kentucky, recommend this form to record safety hazards, notify those responsible for correcting them, and promote quick followup action.

The five-part form records the exact place and time a hazard is discovered; it provides a place for the observer to note details quickly in writing, before he or she forgets; and it allows for comments or directions by both the safety officer and park superintendent. In short, this form brings dangerous situations to the immediate attention of the responsible managers, and serves as a vehicle for immediate remedial action.

ABRAHAM LINCOLN BIRTHPLACE, N.H.S.
SAFETY INSPECTION RECORD

TYPE HAZARD: DATE:

LOCATION:

COMMENTS:

SAFETY OFFICER:

COMMENTS:

SIGNATURE:
DATE:

SUPERINTENDENT:

COMMENTS:

SIGNATURE:
DATE:

RECOMMENDED ACTION:

RESPONSIBLE PERSON:

DATE CORRECTIVE ACTION COMPLETED OR PUT INTO OPERATION:

COMMENTS:

SIGNATURE:

Removing Paint Safely

Paint stripping and scraping is just part of routine maintenance, but it can become more than routine if the paint contains lead (pre-1950).

No matter what paint removal method a worker may use, he can absorb a certain amount of lead. The lead is absorbed in two primary ways: 1) by swallowing dust containing lead; and 2) by breathing in dust that contains lead.

The most dangerous way to remove old paint is with a propane torch. The high temperature of the flame creates lead vapor, which is then breathed without a person's realizing it. The next most hazardous method is sanding because this creates lead-containing dust.

The electric heat blower is the safest method of removing lead-based paint because it does not vaporize the lead the way a propane torch does, nor does it create the dust that sanding or rotary stripper does.

Recommended Procedures

With all methods of paint removal, it is safest to use a respirator, and to follow these precautions:

1) use adequate exhaust ventilation;
2) change and wash clothes after stripping;
3) wash carefully and fequently;
4) use a respirator with appropriate filter changed at specified times;
5) be careful handling and disposing of paint scrapings and dust;
6) be careful that lead dust doesn't seep into other areas of the building.

Seal off the room being stripped and wet-wash the room when finished to remove all traces of dust.

Lead Poisoning

Symptoms of lead poisoning include dizziness, headache, abdominal complaints, weight loss, weakness of extremities, or numbness and tingling. There also may be a thin bluish line seen at the gum margin of the teeth. It is also possible to have elevated levels of lead in the blood without any symptoms. That is why periodic medical surveillance is recommended for any worker doing a lot of paint stripping.

Cats and dogs often show signs of lead poisoning before humans do. These early warning signals include vomiting and drowsiness. Children and pregnant women should never be exposed to paint stripping because they are particularly vulnerable to lead poisoning.

The primary treatment for lead poisoning is simply to remove the patient from exposure to lead—to stop paint stripping. Severe cases may require hospitalization for intravenous administering of chelating agents.