U.S. Department
of the Interior

Heritage Conservation
and Recreation Service

Grist

November/December 1980
Volume 24/Number 6

Sgt. Paul E. Bolton instructing officer Eugene G. Melanson in the DECAT Program.

DECAT Program Trains Drivers to Conserve Fuel

During the last several years the United States Park Police (USPP) has become keenly aware of the need to conserve energy. USPP's main energy consumer is its fleet of 224 vehicles, which consumes an average of 325,000 gallons (1,235,111 liters) of gasoline per year. Although the nature of law enforcement makes energy conservation difficult, police officers can be trained to drive in an energy-efficient manner.

In July 1979, USPP sent four officers to the Department of Energy's Driver Energy Conservation Awareness Training (DECAT) program for instructors. The DECAT program evolved from a study conducted in 1976 at the department's Nevada test site to evaluate the results of driver training and the use of a vacuum gauge to increase fuel economy. The findings, published in 1978, indicated that this combination reduced fuel consumption 10–15 percent.

Based on these findings, the program was adapted to train instructors from agencies across the country. These instructors, in turn, train others to present the DECAT course. Accordingly, the four USPP officers, upon returning to their respective assignments, began to train their coworkers.

(Continued on p.48)

Energy Saving and Recycling

Grist

A publication of Park Practice
Park Practice is a cooperative effort of the Heritage Conservation and Recreation Service and the National Recreation and Park Association.

Chris Therral Delaporte, Director
Heritage Conservation and Recreation Service

John H. Davis, Executive Director
National Recreation and Park Association

Editorial Staff

Heritage Conservation and Recreation Service
Division of Park and Recreation Technical Services
U.S. Department of the Interior

James A. Burnett, Editor, *Design* and *Grist*

Kathleen A. Pleasant, Editor, *Trends*

Contractors to the Program

Maureen Palmedo and Associates, Consulting Editors, *Trends, Grist, Design*

District Lithography Company, Inc., Printer

Park Practice includes: Trends, a quarterly publication on topics of general interest in park and recreation management and programming; *Grist*, a bimonthly publication on practical solutions to everyday problems in park and recreation operations; and *Design*, a quarterly compendium of plans for park and recreation structures which demonstrate quality design and intelligent use of materials.

Membership in the Park Practice includes a subscription to all *three publications and selected back issues in vinyl binders* with indices and all publications for the calendar year.

The initial membership fee is $80; annual renewal is $20. A separate subscription to *Design* is $50 initially, and $10 on renewal. Subscription applications and fees, and membership inquiries should be sent *only* to: National Recreation and Park Association, 1601 N. Kent Street, Arlington, Va. 22209.

Articles, suggestions, ideas and comments are invited and should be sent to Park Practice, U.S. Department of the Interior, Heritage Conservation and Recreation Service, 440 G Street, NW, Washington, DC 20243.

HCRS
U.S. Department of the Interior
Heritage Conservation and Recreation Service

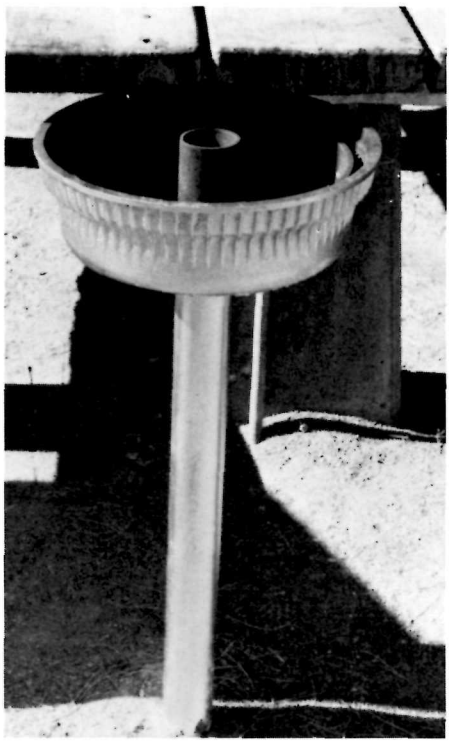

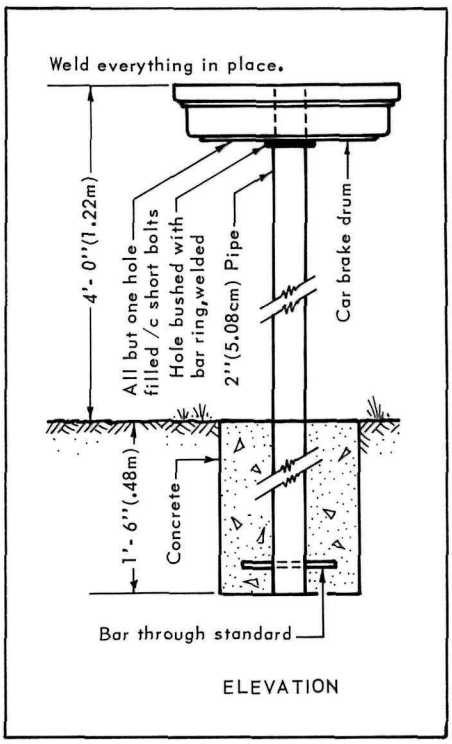

Brake Drums for Charcoal Cookers

Tighter budgets have forced everyone to take a look at available resources. When Glenn Mincks, a ranger at Anza-Borrego Desert State Park in California, looked around, he saw throw-away car brake drums that could be recycled into charcoal stoves for primitive campsites.

Mincks cemented a 48-inch (120 cm) length of 2-inch (5 cm) pipe 18 inches (45 cm) into the ground. Then he welded a brake drum, bushed with re-bar, to the pipe.

The stoves have been used without any problems for more than a year. Even cleanout is simple. A bent coffee can scoop fits inside the brake drum; one sweeping motion scoops the drum clean.

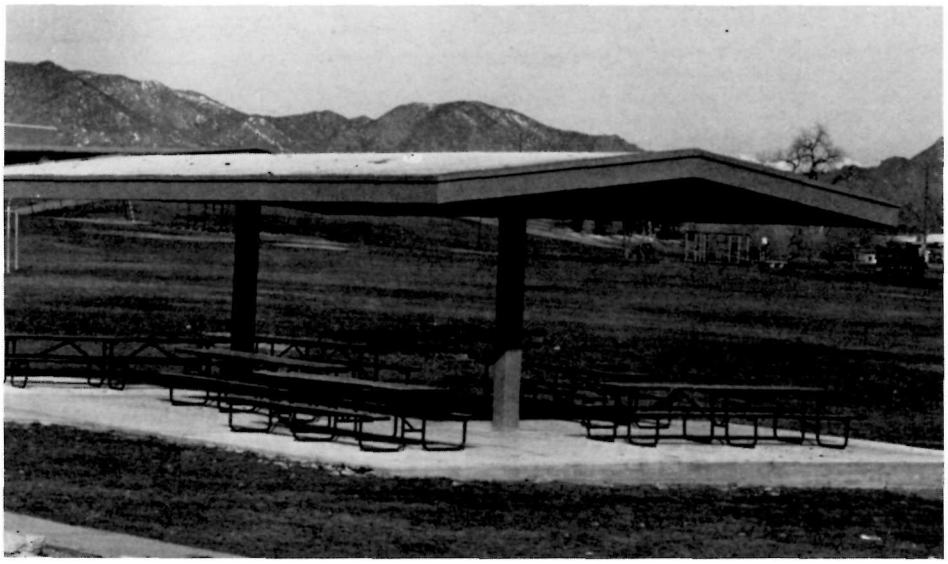

New Use for Service Station Canopy

Through the generosity of the Standard Oil Company and the ingenuity of the North Jeffco Recreation and Parks District, Colorado, an old service station canopy found a new use as a picnic shelter in a neighboring park.

Both the service station and the land on which it stood, valued at $60,000, were donated to the North Jeffco Foundation by Amoco, Standard Oil Company. This gift resulted from diligent negotiations between representatives of Standard Oil and President of the North Jeffco Board of Directors, Gail H. Gilbert.

The service station site, which had not been utilized for several months, stood in the southwest corner of the North Jeffco Park. Staff moved the canopy to nearby Oak Park and placed it over a 30-foot by 60-foot (9 m by 18 m) concrete slab to serve as an all-weather picnic shelter.

Now the district is remodeling the remaining service station into a workshop for recreational arts and crafts.

Two Ways to Insulate Storm Windows

When the winter winds rattle windowpanes and frost covers the glass, it's time to put technology to work. The glass in windows can lose about 20 percent of the heat in a well-insulated building and up to 35 percent in a poorly insulated one. The R-value of storm windows ranges from a mere R-1.5 to R-2.0.

In an effort to reduce heat escape, Skip Snow, formerly at Mount Rainier National Park in Washington, experimented with several insulating shutter and curtain designs for windows. His simplest design was a lightweight insulating panel with an estimated R-value of 4-6. The panel consisted of a sandwich of Thermopoly sheathing in a 1-inch by 2-inch (2.5 cm by 5 cm) frame between two layers of high-density foil, leaving about 1¼ inches (3.75 cm) of dead air space.

Total construction time was about 20-30 minutes. Installing and removing the panels were simple because the windows were readily accessible. The panels were stored in the house when they were not in use, mostly during the day. Estimated cost of the panels is about 50¢ per square foot (0.09 m^2).

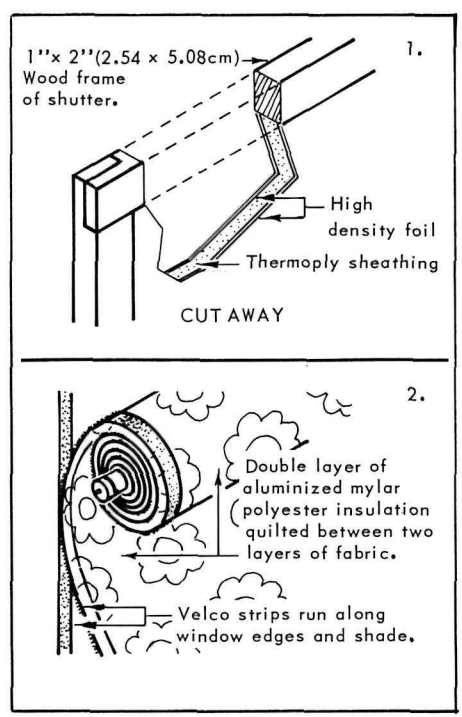

Snow's second design was an insulating roller shade that quilted a double layer of aluminized mylar polyester insulation between two layers of attractive fabric. Estimated R-value of this design is about 4.3, perhaps even as high as 5. The roller shade design was more complicated and time consuming; it involved both carpentry and sewing skills. However, once made, the roller shade was easier to operate.

To provide a proper thermal barrier, all four sides of the roller shade needed to be sealed. Velcro strips were attached to both the window frame and shade to provide this seal. Estimated cost of the roller shade device is about $1.50 per square foot (.09 m^2).

Safety and Security

Warning on Use of Penta-Treated Wood

Our March/April 1980 *Grist* described a handsome picnic table designed by Harry Bennitt of Harmonie State Park, Indiana. In the article, we mentioned that the table was made of penta-treated wood.

Following the publication of this item, Nicolas Veloz, Jr., of Turkey Run Park in McLean, Virginia, alerted us to the danger of using penta-treated wood in places where it might come into contact with food or bare skin. Frequently used as a wood preservative, pentachlorophenol is a highly toxic irritant that can be absorbed through the skin. Our safety experts have confirmed this danger; they recommend using copper-8-Quinolate or something similar on picnic tables instead of pentachlorophenol.

Further information on pentachlorophenol and guidelines for its use can be found in a publication titled *Industrial Hygiene Release for Pentachlorophenol,* published by the Division of Safety and Occupational Health Management of the National Park Service.

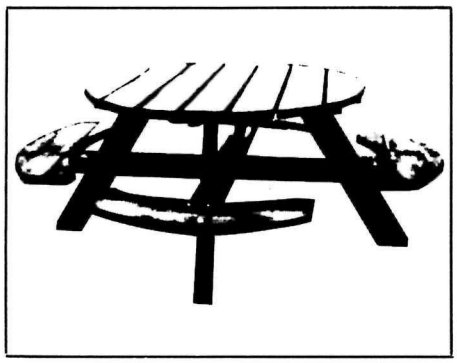

Shut Burglars Out

Park personnel at George Rogers Clark National Historical Park, Indiana, hadn't meant to have an open door policy for burglars, but when local police surveyed the park's security, that is virtually what they found.

To lock the exit doors of the visitor center at night, personnel adjusted a screw in the push-bar lock release; this made the bar stand out from the door on the inside. However, burglars could take a piece of coat hanger, bend it into a hook, and push it through the crack between the double doors. They could slip the hook over the push-bar and pull it toward the outside to release the lock. With glass doors, the burglars even could see what they were doing.

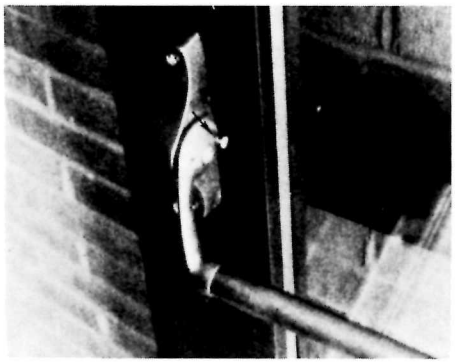

Maintenance workers Larry Litherlund, Don Hedge, and Dale Miley came up with a better idea. They drilled two matching holes that line up when the push-bar is in locked position. One hole is through the movable bracket of the push-bar at the side of the door, the other is on the unmovable mounting under the bracket. Whoever locks the doors for the night now slips a pin, made from a cut-off 10-penny nail, through the two aligned holes. This prevents the push-bar from being moved until the pin is removed. Yet the door can be opened from the outside with a key.

In no way does this system interfere with the normal daytime use of the safety push-bar release mechanism. It just closes the door on burglars at night.

Simple T-Bar Barrier

Who says a gate has to be a heavy, expensive item? Not Pennsylvania Power and Light Company.

Clark E. Travelpiece, recreation development assistant, suggests a low-cost, low-maintenance pipe barrier that can be made from salvage materials. Emergency or maintenance vehicles can easily unlock the padlock and remove the T-bar barrier to gain access. Meanwhile, unauthorized traffic is blocked.

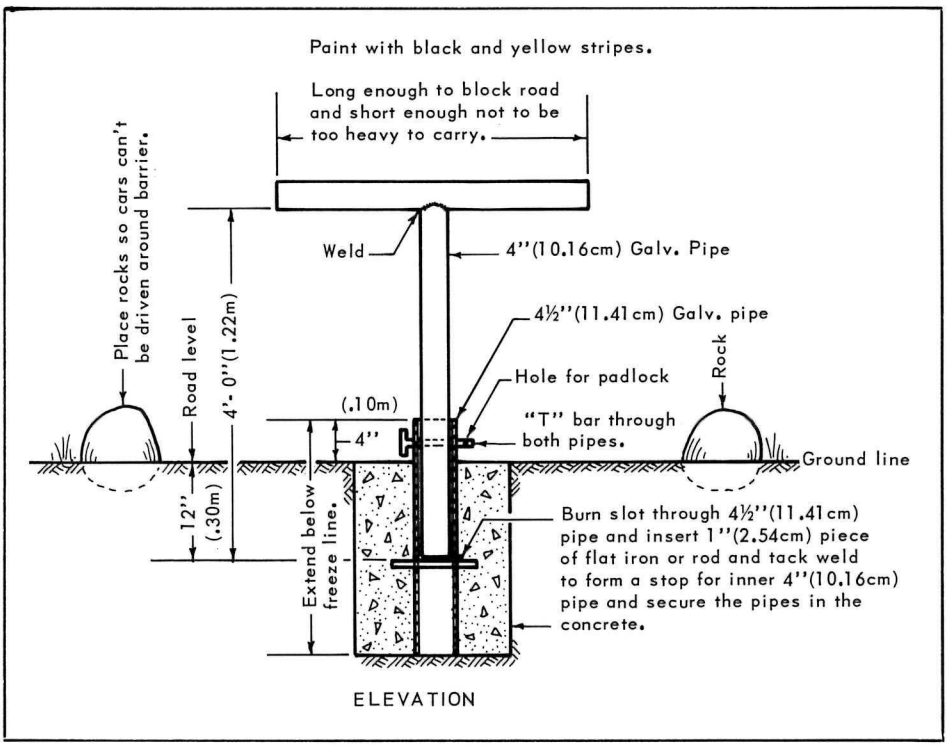

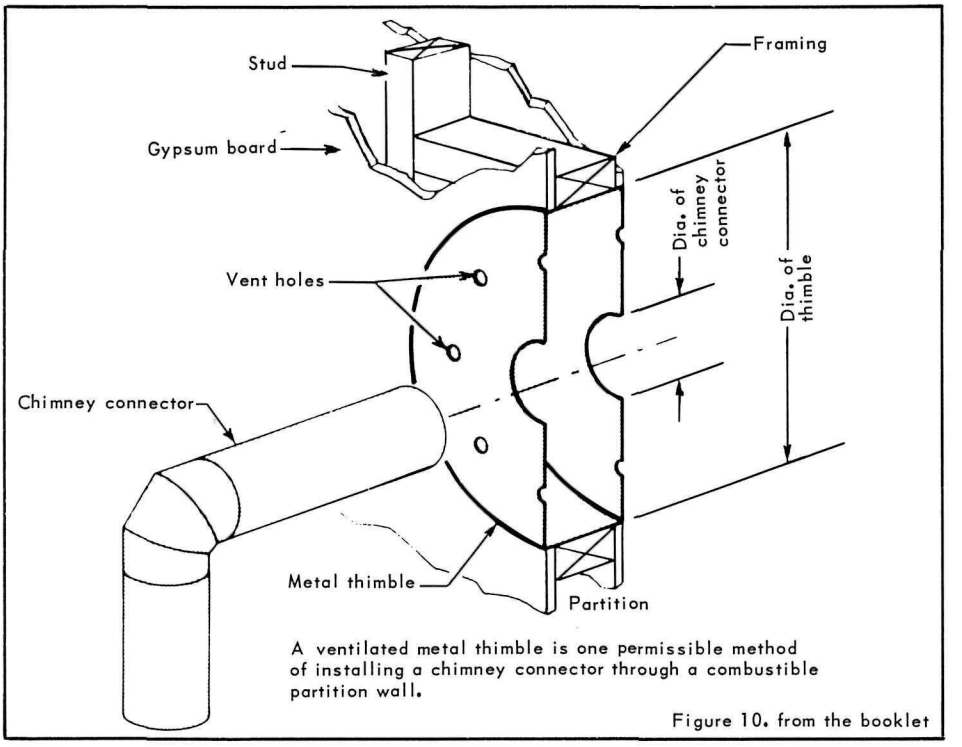

A ventilated metal thimble is one permissible method of installing a chimney connector through a combustible partition wall.

Figure 10. from the booklet

Door Guard

Storm and screen doors are so popular they almost are taken for granted—until someone falls through one. Small children are especially prone to accidents involving storm doors and broken screens.

Ray E. Claycomb, assistant chief park interpreter at Natchez Trace Parkway in Tupelo, Mississippi, considered the problem and came up with an inexpensive, easily installed door guard. In addition to providing extra safety for storm and screen doors, Claycomb's suggestion helps reduce maintenance costs by preventing broken glass and pushed out screens.

The guards are constructed of 1-inch (2.5 cm) thick 4-inch (10 cm) wide wood. Similar units available commercially would cost a minimum of $7 each. The guard does not interfere with height adjustments to the inside glass or with the removal of either the inside glass or the outside screen for maintenance.

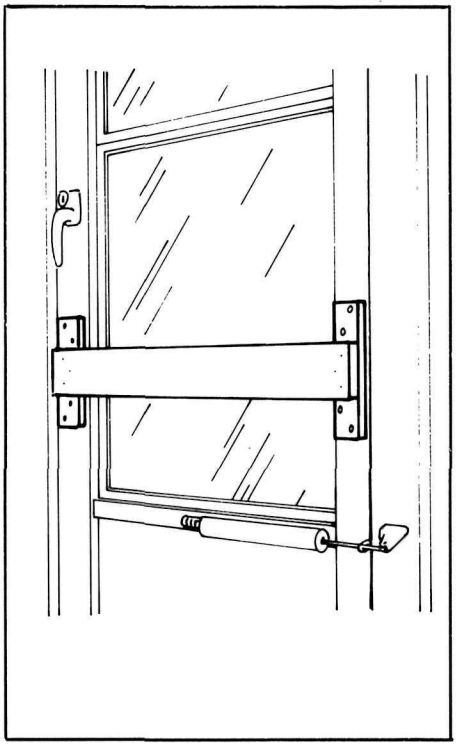

New Stove Safety Booklet

Using Coal and Wood Stoves Safely!, published by the National Fire Protection Association, is an excellent resource for recreation areas and parks that use these items.

In clear, succinct language, the booklet covers the selection, installation, use, and maintenance of coal and wood burning equipment. It also discusses chimneys and chimney connectors. In addition, the booklet addresses specific fire hazards associated with solid fuel burning equipment and reports on typical fires to emphasize the points made in the text.

As our energy supply continues to dwindle and as people grow more aware of the need to conserve it, alternate heating and cooking methods become more and more appealing. Yet the safe use of these methods depends upon knowing and avoiding all potential hazards.

Using Coal and Wood Stoves Safely! gives readers a thorough, understandable safety review. The 12-page, illustrated booklet (NFPA no. HS-10), is available from the National Fire Protection Association, 470 Atlantic Avenue, Boston, MA 02210; price $5.

Prevent Gasoline Theft —Cheaply!

As the price of gasoline goes up, so does the possibility of its theft. Now, Howard A. Jefferies, a horticulturist at Independence National Historical Park in Philadelphia, suggests a sure cure for the theft of gasoline from vehicles. Best of all, this cure is cheap; it costs less than a gallon of gas.

Simply add an antitheft spring to the fill pipe of each vehicle. This prevents siphoning but does not interfere with fillups. And by using this preventive measure rather than adding a locking gas cap, Jefferies notes, you don't have to worry about losing a key.

Maintenance

Grit Catcher for Power Grinder

A grit catcher on a power grinder can improve shop housekeeping while also providing a safer environment for workers. Here's an inexpensive catcher designed by maintenance worker Kenneth Dale Miley for use at George Rogers Clark National Historical Park in Indiana.

Miley's shop has a pedestal-mounted power grinder with a stone sharpener disk on one side and a steel bristle wheel on the other. Without a catcher, the grinder throws grit and steel particles out the back, creating a safety hazard and dirtying the wall and floor.

Miley took an empty 2-pound (0.9 kg) coffee can and cut a hole in the bottom to just fit over the discharge chute at the bottom rear of the wheel. He drilled a hole through the top of the discharge chute, then attached the can to the chute tubing with a metal screw to hold the top side of the horizontal can snugly in place. He added a washer to assure a tight fit and prevent grinder vibration from loosening the screw. With this device, the grit that flies out of the grinder now goes into the can.

The plastic lid of the coffee can, placed over the back, open end, keeps the grit and particles inside. This lid can be removed easily to clean out the grit. For a finishing touch, Miley painted the coffee can to match the grinding mounting.

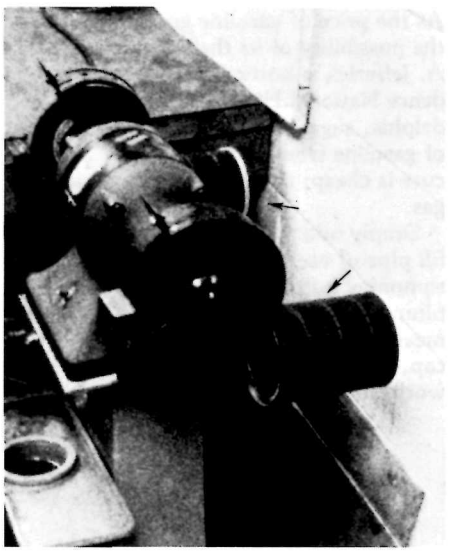

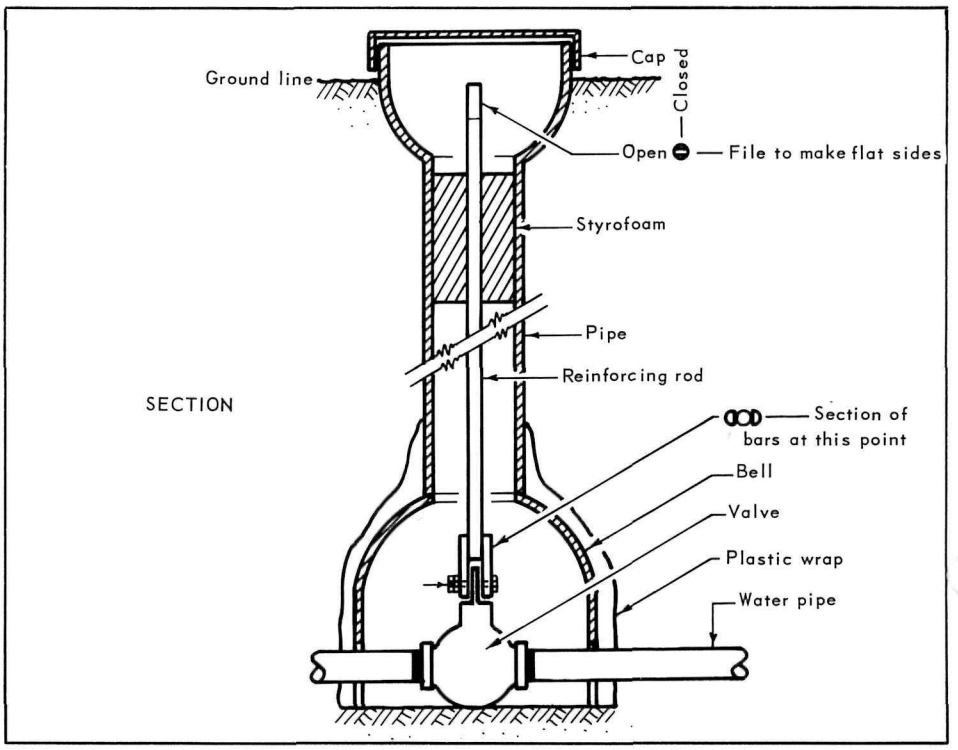

Water Line Valve Modification

Nature has a way of exasperating us while simultaneously providing us with beauty. Parks along the Susquehanna River are a good example of this.

Because the parks are built on a silt soil and the river floods frequently, curb key boxes challenged staff ingenuity when it came time to winterize buildings. The boxes would fill up with silt and workers had to force the long curb key through 2 feet (60 cm) of mud, hoping to hit the valve.

Then Jesse Taylor, park superintendent II in the Susquehanna Complex, came up with a good suggestion that eliminated the problem. His proposed valve modification can be made as the curb key boxes are dug up to remove the silt.

When the curb key box is removed, Taylor suggests cutting off two 1½-inch (3.75 cm) pieces from a reinforcing rod and welding these pieces to each side of the long rod as shown. Drill a hole through the two short pieces of rod and the top of the valve where the curb key rests. Then bolt the rods and the valve top securely with two nuts. Replace the curb key box by slipping it over the reinforcing rod. When the bell is in place over the valve, wrap it in 4-mill plastic, then fill in the hole. If the rod is too long, you can trim it with a torch. Pack the top 8–10 inches (20–25 cm) of bell housing with styrofoam slabs to keep the rod in the center of the pipe. If the cap does not lock, the styrofoam also will keep out debris. With a file, notch the top of the welding rod. Stamp the lid lip with "on" and "off."

With this modification, it takes less than a minute to shut off the water, whereas before it could take a day just to dig up the valve. Instead of carrying a 6–8 foot (1.8–2.4-m) long curb key, now workers only need a pair of vice grip pliers to turn off the water. And with the notch clearly pointing to "on" or "off," for the quarter-turn valves, no mistakes can be made.

Swivel Chair Speeds Up Painting

A seat-of-the-pants idea saved Cumberland Gap National Historical Park, Kentucky, both work hours and wages. The problem was how to spray paint trash cans efficiently.

Park personnel spent approximately 12 days each year spray painting the trash cans in the park. The job involved spraying and turning each can by hand to ensure an even coat of paint.

Robert A. Higdon, electrician, saw the problem and came up with an idea. He obtained an old swivel office chair and took off the casters and seat. Next he determined the platform height needed by the painter, cut four 1¼" (3.125 cm) pipes to length, and welded them to the chair bottom in place of the casters. Then he bolted a square section of ¾" (1.875 cm) plywood to the assembly where the seat had been.

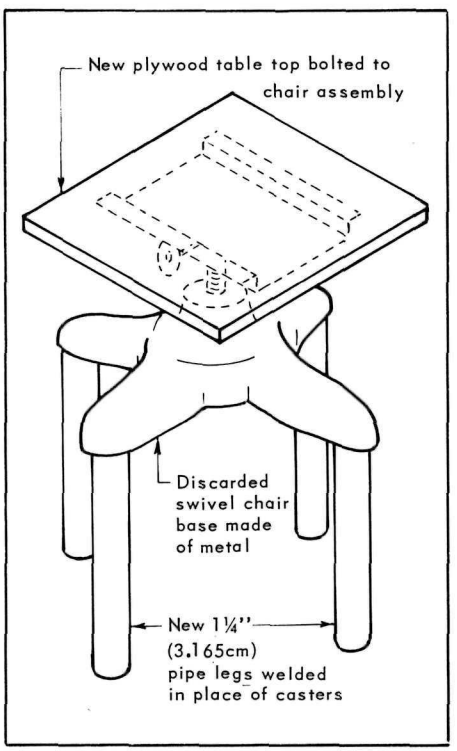

The resulting swivel platform allows the painter to paint all 260 trash cans in two-thirds the time. This is a savings of four work days and $240 in wages.

For his suggestion, Higdon received a $30 National Park Service incentive award.

Trash Can Reflectors

Things that go bump in the night should not include park trash receptacles. But that was the problem foreseen at Natchez Trace Parkway in Tupelo, Mississippi.

New "drive up" containers were installed next to the roadway so motorists wouldn't have to get out of their car to deposit trash. But, because the receptacles are so near the roadway and are hard to see at night, the receptacles were destined for many bumps and scrapes.

Park technician Steve G. Franks Jr. suggested using strips of yellow reflective tape on each side of the containers facing traffic. By placing one strip along the mouth of each receptacle and one down its side, the container now is clearly visible at night.

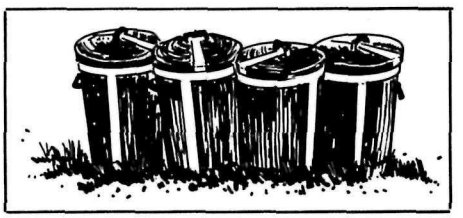

Water Trap for Diesel Engines

Water in diesel engine generators poses a serious, costly problem. Condensation that accumulates in fuel tanks can enter the engine and cause it to malfunction. In time, these malfunctions become serious and cost parks thousands of dollars in overhauling and, eventually, replacing the engine.

Paul E. Hicks, a plumber at Gulf Islands National Seashore Park in Mississippi, devised a water trap that can be installed on fuel tanks to prevent condensation build-up. The traps cost less than $10 each. In Gulf Islands alone they saved an estimated $3,940 in one year, based on the use of four generators and past operating history.

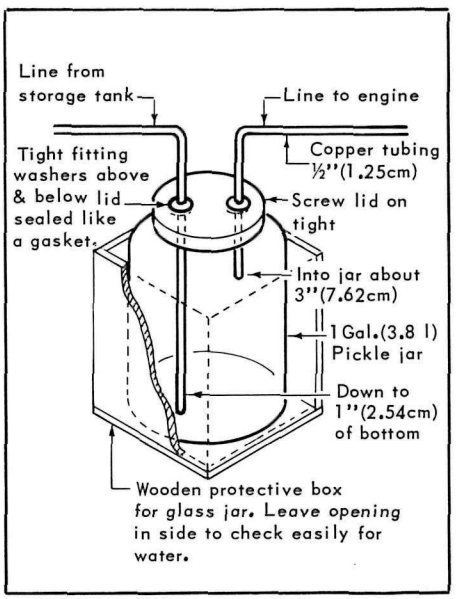

Cleaner Mop Water

Maintenance Worker R. E. Norman at Homestead National Monument, Nebraska, uses a 3-gallon (11.4 l) garden sprayer filled with diluted wax stripper to speed up his floor cleaning chores.

He says it is easier to mop up than the old mop-bucket method because there isn't as much water to pick up with the mop, the water doesn't get as dirty, and it takes less stripper to do the job.

Norman says he has been using the method for several years and he gets a cleaner, better overall job done in less time.

He was presented a $25 National Park Service incentive award for his suggestion.

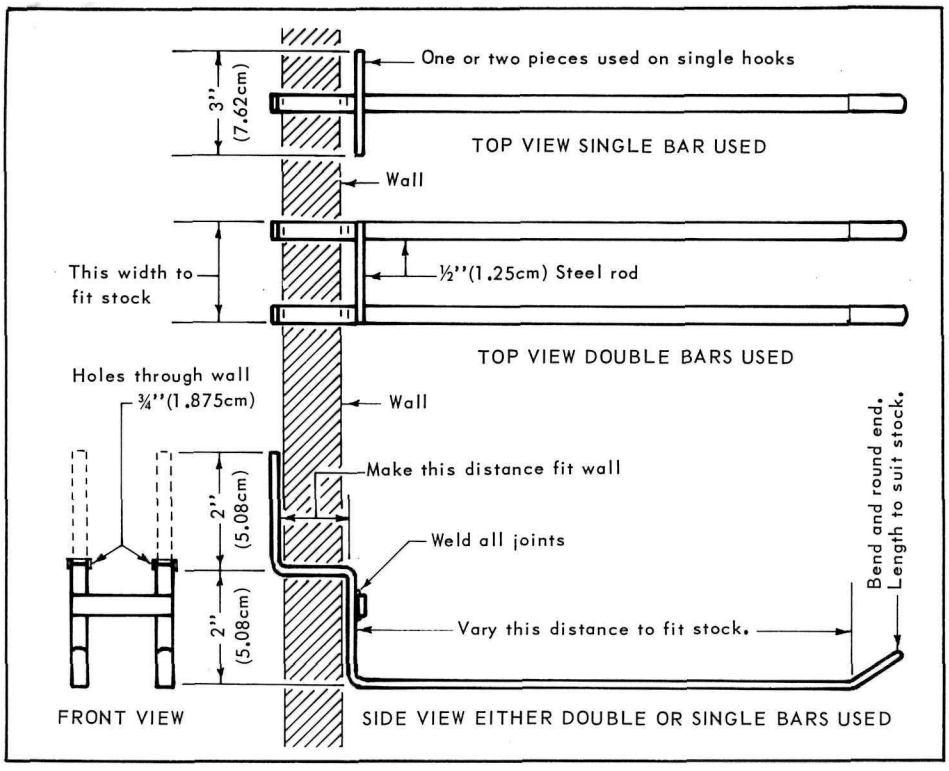

Storage Hooks

Keeping track of a wide variety of equipment in a limited space is a common problem. At Willow River State Park in Wisconsin, head mechanic Mark Couch arrived at a workable solution by creating special wall hooks that store equipment and allow inventory at a glance.

To make a hook, Couch uses a cutting torch to bend a series of right angles into lengths of ½-inch (1.25 cm) well or steel rod. He makes the first right angle bend about 5 inches (12.5 cm) from the end of the rod. He varies the second length, after the bend, to hold different types of equipment, and makes the third length fit the thickness of the wall. For additional stability in a single rod hook, two 2-inch (5 cm) sections are welded midway between the first and second bends.

To store awkwardly shaped or heavy equipment, two single rod hooks can be joined by a crosspiece cut to fit the specific item to be hung. Weld this crosspiece between the first and second bends.

The hooks are simple to install. First, lay some brown paper on the floor and arrange the items on it as they will be stored. Trace the items, then hold the paper against the wall to see where holes should be drilled. Make the holes slightly larger than the rods you intend to use.

One word of caution: these hooks should not be located where personnel can run into them. Nor should they be used where heavy or sharp items such as axes might cause injury if they fall.

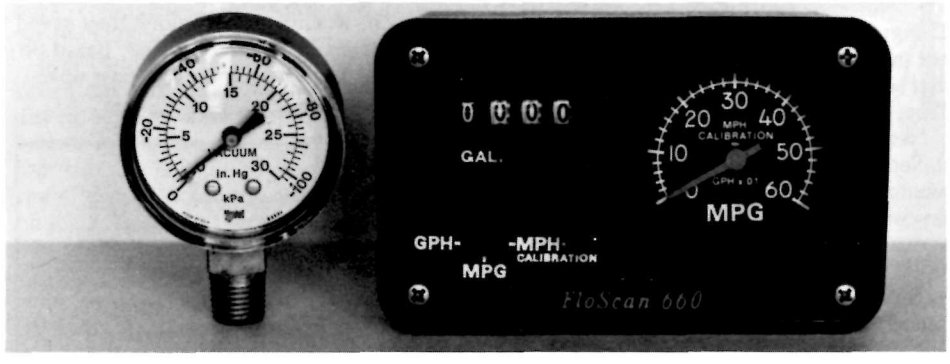

Vacuum Gauge *FloScan*

DECAT Program

(Continued from p.41)

Basically, the DECAT course teaches people driving techniques that help conserve fuel. The 2-hour classroom session includes a slide program and a movie, "Running on Empty," both compiled by the Department of Energy. Following this presentation, the students receive behind-the-wheel instruction on how to implement the procedures shown in class.

Three instruments on the training vehicles keep visual and audio track of the operating efficiency and fuel economy of the engine during the practice session. These instruments are:

1) *A vacuum gauge* that enables drivers to observe the way they use the accelerator and shows them how to maintain a high, steady vacuum to achieve maximum fuel economy.

2) *A FloScan* that relays the miles per gallon the vehicle is getting during all phases of operation. This gauge includes a totalizer that clicks off the number of gallons consumed in 1/1000-gallon increments.

3) *A tripmaster* that measures distances traveled in 1/100 miles. This is used to compute the exact miles per gallon for the test run.

These three instruments, along with the instructor's narration, let the students compare their normal driving habits with those that can significantly increase fuel economy.

Ultimately all USPP cruisers will be equipped with vacuum gauges so drivers can observe fuel economy. It is hoped use of these devices to practice efficient driving on the job will carry over to efficient driving of personally owned vehicles.

To date, 17 USPP officers, 12 National Park Service employees, and 7 employees from such agencies as the Department of Treasury, Department of Justice, Internal Revenue Service, and Immigration and Naturalization Service have been trained as DECAT instructors. As these instructors train their respective coworkers, eventually more and more employees will learn how to drive efficiently. Already, the DECAT program has been adopted by the entire Department of Treasury.

The USPP emphasizes the efficient use of its vehicles and encourages other law enforcement agencies to consider adopting similar programs. For further information, contact Major George W. Winkel, Commander, Technical Services, U.S. Park Police, 1100 Ohio Drive, SW, Washington, DC 20242.

Tripmaster

Grist
FEEDBACK SHEET

1. How is the material in this issue of *GRIST* useful to you or how does it help you solve any specific problems?

3. Which parts of this publication, if any, were difficult to understand or use? How can they be improved?

2. What ideas do you have that you can share with others?

FOLD HERE

No Postage
Necessary
If Mailed in
the United States

Business Reply Mail

First Class Permit No. 12886 Washington, D.C.

Postage will be paid by addressee

PARK PRACTICE

U.S. Department of the Interior
Heritage Conservation and Recreation Service
440 G Street, NW
Washington, DC 20243

FOLD HERE