GRIST

MAY/JUNE 1974 VOLUME 18/NUMBER 3

TURN YOUR IDEAS TO DOLLARS –

AWARD PROGRAMS CONTINUED, EXPANDED $ $ $

Now, more than ever, ideas — *good* ideas about park and recreation operations — are worth money. In addition to a long standing awards program for contributions to *Grist*, a completely new program for *all* employees has been instituted, and an expanded program for *NPS* employees has been announced.

Awards under all three programs are made for original ideas which improve the quality of park and recreation operations or maintenance, with the determining factors being the degree of practical application at the field level, time and money saved, and increased efficiency.

Newly set up is the award program being sponsored by the Maintenance-Management Institute, conducted by North Carolina State University, and affiliated with the National Recreation and Park Association. The awards are to be made for contributions about maintenance to the Park Practice publications—*Trends, Grist, Design* and *Guideline*. Certificates for Excellence will be made to ten finalists, with the top three from this field receiving checks for $100, $75 and $50. Winners will be announced by the Board of Regents at the Institute's annual banquet, held every January. Deadline for this year's competition is Oct. 31, 1974. *(*See below)

Using the Service Incentive Awards program, the National Park Service has expanded its $25 awards for contributions to *Grist* to include the 3 *other* Park Practice publications—*Trends, Design* and *Guideline*. Eligible are Service employees only, and the idea contributed cannot have been previously awarded. (*See below)

Finally, continuing is the program sponsored jointly by the National Conference on State Parks and the National Recreation and Park Association, with state, local and private employees only being eligible. This annual competition recognizes outstanding contributions to *Grist* with awards of $100, $50 and $25.

(*) Ideas and material for all of the programs should be submitted to the Managing Editor, Park Practice Program, National Park Service, U.S. Department of the Interior, Wash., D.C. 20240—or telephone (202)-523-5169 for information.

SUMMARY

NPS SIGN SYSTEM PROGRAM

Because of frequent requests for information concerning the origin, history, and status of the National Park Service sign system program, this general summary was prepared at the NPS Denver Service Center by Bill Rosenberg.

The project was started in May 1966 with inhouse studies on overall deficiencies of several individual park sign systems used in the National Park Service, and with two architect/engineer contracts. One contract was for the study of Cape Cod signing, issued to Chermayeff & Geismar Assoc., Inc. of New York City and another to Rogers, Taliaferro, Kostritsky and Lamb of Baltimore, Maryland, to study signing in the Metropolitan Washington, D.C., parks, specifically George Washington Memorial Parkway.

When it became obvious that more detailed studies were required, the Chermayeff & Geismar contract was expanded into a Servicewide study for informational and directional signing applications, and for a symbol system to simplify and universalize our signs.

Inhouse studies were continued in specific phases of park requirements and the Chermayeff & Geismar study was completed in April 1970, after three major amendments to their contract for other fields of study. Rapidly, the National Park Service began analysis of this study and all symbols were submitted to the University of Bridgeport's Graphics Department for nationwide survey and analysis and further revisions to more nearly meet the needs of the traveling public. The UNESCO Committee on Breaking the Language Barrier assisted and recommended several detailed refinements.

The National Park Service

(Continued on p. 24)

DEGRADABLE PLASTICS—ONE ANSWER TO LITTERING?

Mankind (including park visitors), being a little lower than the angels, as the Psalmist reminds us, probably needs a little help. The admonition, "please don't litter", apparently is not enough. Some of it—littering—may always be with us. So, can we do something about *what's* being littered?

A firm in Idaho says we can. They report that they've developed additives which make plastic products bio-degradable; that is, exposed to sunlight and the outdoors, these plastics break down and eventually disappear. And, because approximately *100 million pounds* of plastic are littered annually in this country, anything which can be done to make this waste non-existent deserves our consideration. (Because plastics are lightweight and float and blow with the wind, their role in littering actually involves *volume*, having 5 to 6 times the impact of weight alone!)

The Idaho company's products are applicable to two major types of plastic—polystyrene, such as used for plates, lids, and food containers, and polyethylene, such as used for trash bags. Both additives act as catalysts, causing a reaction between the polystyrene (or the polyethylene) and the ultraviolet rays in sunlight. The reaction causes the molecules in the plastic to heat up and snap apart. Once this happens, the oxygen in the air reacts with the molecular fragments to continue the breakdown until only carbon dioxide and water remain. These byproducts are then consumed by the microorganisms in the soil, thus completing the cycle and returning the material to the natural environment. The cycle requires from 1 to 5 or 6 months, depending upon amount of additive and exposure to sunlight.

The catalytic reaction, however, does *not* begin until *after* exposure to sunlight and after 30 to 90 days have elapsed. Thus, plastic products with the bio-degradable additives may be used in the usual way with no effect on the product's strength or upon its normal indoor shelf life.

In reference to the polystyrene additive particularly, there is no effect upon taste, odor or appearance of packaged food.

The polystyrene additive bears the trade label of Sty-Grade, and has Food & Drug Administration (FDA) approval for food packaging. That this use might have applicability to park concessioners, and thus begin to answer the litter problem in park and recreation areas, is suggested by the action of two fast food chains. Both Der Wienerschnitzel, a 250-unit chain, located mostly on the West Coast, and Red Steer Drive Ins (operating Kentucky Fried Chicken units as well) in several western states, have adopted the use of bio-degradable polystyrene lids for hot and cold drinks.

Barbara Gebhards at Island Lake near Ruffneck Peak gathers up refuse.

Bio-degradable: One day, 30 days and 150 days after being discarded

GRIST

a bimonthly publication of the nonprofit, educational park practice program cooperatively conducted by the National Park Service, National Conference on State Parks and the National Recreation and Park Association.

Material for Publication should be sent ONLY to:

James A. Burnett, Editor
Division of Federal, State and Private Liaison
National Park Service, Washington, D.C. 20240

The publishers of GRIST do not guarantee that the ideas or procedures presented herein are suitable for all applications. GRIST serves only as a medium for the dissemination of these ideas.

Advertising is not accepted; however, information is given on those products or services which our contributors believe can provide more efficient and economical park and recreation area operation. The mention of a product, service or procedure does not constitute official endorsement, nor does it imply that comparable products or methods are less suitable.

Subscription Rates

NEW subscr. to Program – all vols. of DESIGN, GUIDELINE, TRENDS, and GRIST(2 prev. yrly. vols.); plus all publications as issued; thru 1st calendar yr.– 1st yr. only: . . . . . .$80.
RENEWAL (all publications as issued thru calendar yr.) . .$20.
GRIST only renewal $7.50
GRIST, additional quantities of each issue to new or renewal subscriptions, sent to same address, ea. annual vol. (no binder). $2.50
Same, but with new hard plastic binders, 1 set of four . .$10. (separarely, $3.each)

Subscription applications and fees, and membership inquiries should be sent ONLY to: National Recreation and Park Association, 1601 North Kent Street, Arl, Virginia 22209

NOT PRINTED AT GOVERNMENT EXPENSE

Note:
New GRIST binders are available from the National Recreation and Park Association, 1601 North Kent Street, Arlington, Va. for $3. each.

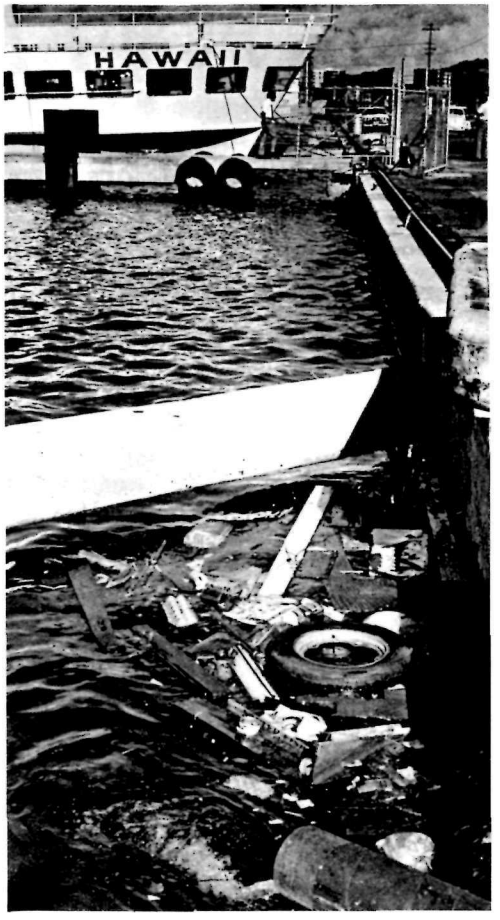

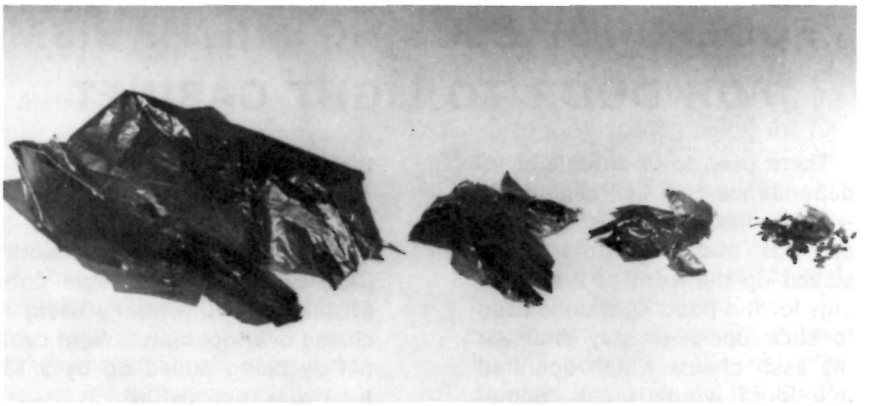

This photograph shows bio-degradable polyethylene in the various stages of degradation following its exposure to the outdoor environment.

The additive for use in polyethylene is known as "Poly-Grade". This acts similarly to Sty-Grade, the deterioration being initiated by sunlight, and continuing (for example, as in a landfill) as long as oxygen is present. (The rate of decomposition, however, will be slower than if the plastics were in direct sunlight.) Although Poly-Grade has not been available commercially long enough for FDA approval, studies show that there is no migration of the additive into any material with which it comes in contact, so approval for food use is not expected to be a problem. Trash bags made of bio-degradable polyethylene are now being marketed at retail under "Strong Boy" label and are also available in bulk for institutional and municipal use.

For further information about Sty-Grade, or Poly-Grade, please write to Bio-Degradable Plastics, Inc., P.O. Box 7981, Boise, Idaho 83707.

For information about Strong Boy bags, write American Western Corp., 2525 East Magnolia, P.O. Box 20867, Phoenix, Arizona 85036.

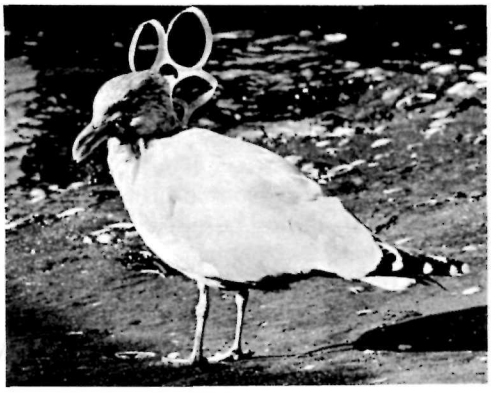

"Please don't litter . . . isn't enough"

EXTEND USE OF RADIO TRANSMITTER-RECEIVER UNITS

Doubling up on the use of equipment already purchased and on hand is the same as money saved, especially if the doubling up results in providing an improved, necessary service to the public. And Park Technician Warren H. Beitel at Fire Island NS has proposed just such a doubling up: it has provided greater safety to the public, and award money to Beitel.

His idea: in the summer, transfer the Motrac transmitter-receiver units from the patrol *vehicles* to the patrol *boats,* and thus put them where they're most needed in season. When they're not being used in the cars due to travel restrictions and other policy considerations, they can be used in the boats. In the fall, transfer them back to the cars, once again where they're most needed, for the winter season.

To implement his suggestion would require an investment of $225 per boat, to cover control unit, speaker and antenna. But this compares favorably to the $1200 which would be required to install a complete Motrac unit in each boat. (As a precaution against corrosion in the salt air, Beitel has recommended that only fibreglass marine antennas be installed.)

With the initial cost per boat out of the way, Fire Island will have double the safety coverage, for far less than double the cost. That's cost efficiency!

PHASES OF THE USUAL PROGRAM

1. Enthusiasm
2. Disillusionment
3. Panic
4. Search for the guilty.
5. Punishment of the innocent.
6. Decoration of all those who took no part.

—Anonymous

FOOLPROOF CLOSING MECHANISM FOR DOOR TO LIGHT CABINET

There used to be trouble at Independence Hall in Philadelphia —out on the back lawns. The trouble was that the doors which closed up the front of the housings for the flood light units used to stick open—or stay shut—or the sash chains which operated the doors would break. Something had to be done.

Two maintenance men, John R. Pecoraio and Jacob E. Tothero, came up with the answer, solved the problem, and made some suggestion award money.

Here's how their idea works (SEE SKETCH). (A) Single door (instead of two formerly used) is closed over opening to light cabinet by being pulled up by 3/16-inch wire rope (B), which passes over pulleys (E) and winds around split wooden reels (F) mounted on 3/4-inch pipe used as shaft (I), this shaft operated by handpower ex-

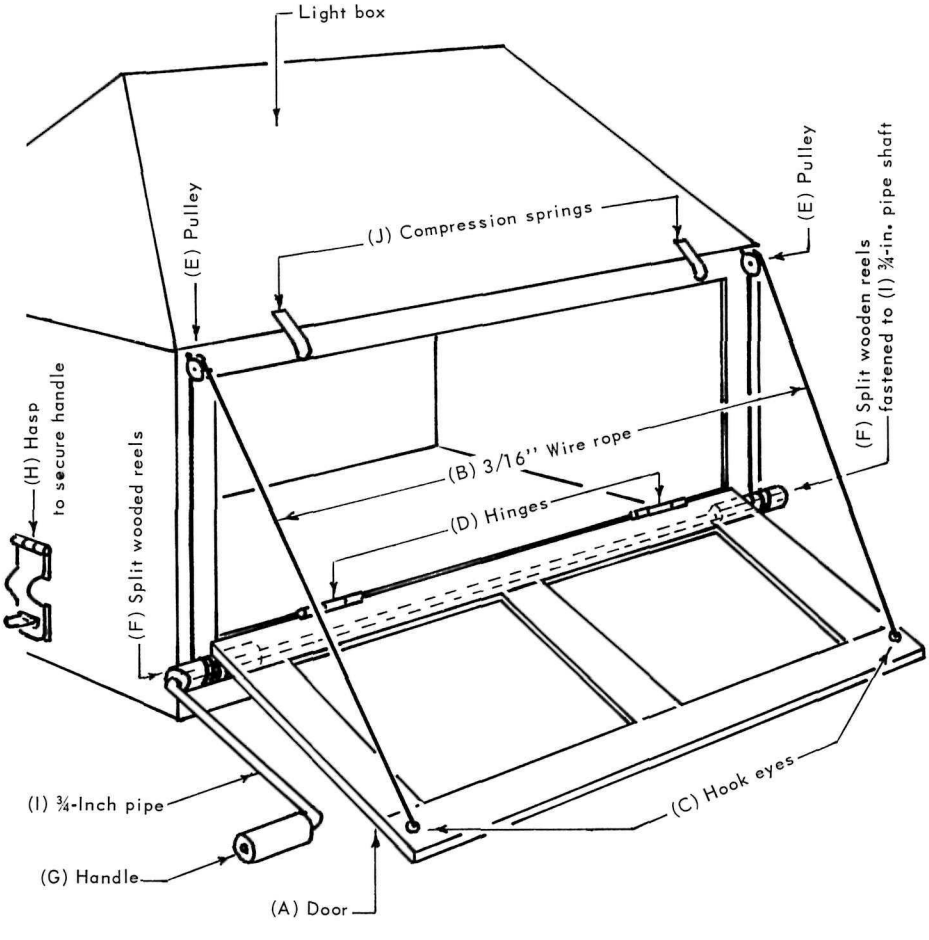

erted on handle (G). Hasp (H) locks handle to cabinet, secure against vandalism, when door is closed. Wire rope is secured to door by hook eyes (C), and door is hinged to light housing by hinges (D). Compression springs (J) effect positive release of door when opening starts.

Only parts B and J had to be purchased, the other parts were found in the Independence Hall shop, or could be made up from material on hand. The two maintenance men estimated that total cost for all the materials used in the 2 door closing mechanisms was about $50.00.

PARTTIME STOP

W.O. Williams, Ranger II at New Brighton Beach State Park in California has found a practical, easily put together answer to that problem of temporarily designating certain intersections as 'Stop' streets during peak travel periods. He's designed and had built stop sign standards that can be readily rotated to swing the face of the sign away from oncoming traffic, as required.

His standard is essentially a length of 1 1/2-inch galvanized pipe (topped by the 'Stop' sign) nested inside a length of 2-inch pipe set in concrete. This larger pipe terminates in a void in the concrete base formed by a coffee can (or similar), in which the bottom end of the smaller pipe is free to turn and to move slightly vertically. A cap on the bottom of the smaller pipe, however, prevents it from being pulled *out* of the base pipe.

To change the direction that the sign faces, the ranger lifts the inner, smaller pipe support slight-

SAW FOR LAMINATES

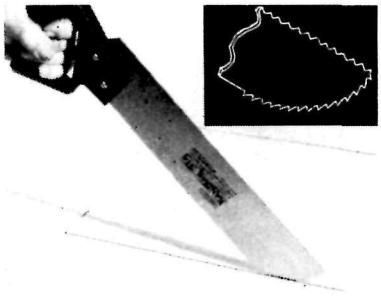

This double-edged saw for laminates, plywood, veneers and plastic pipe has extra teeth on the back of the curved tip for making internal starting cuts. The 12-1/2-inch long Swedish steel blade has 14 points to the inch, can also be used in a miterbox. No. 314 Laminate Saw is $4.45 at hardware and building-supply dealers. Sandvik Steel Inc., 1702 Nevins Road, Fair Lawn, N. J. 17410, makes it.

ly and rotates it 90, 180 or 270 degrees, then lets the pipe drop back into its base. The sign stays fixed in the direction faced, a bolt welded through the smaller pipe

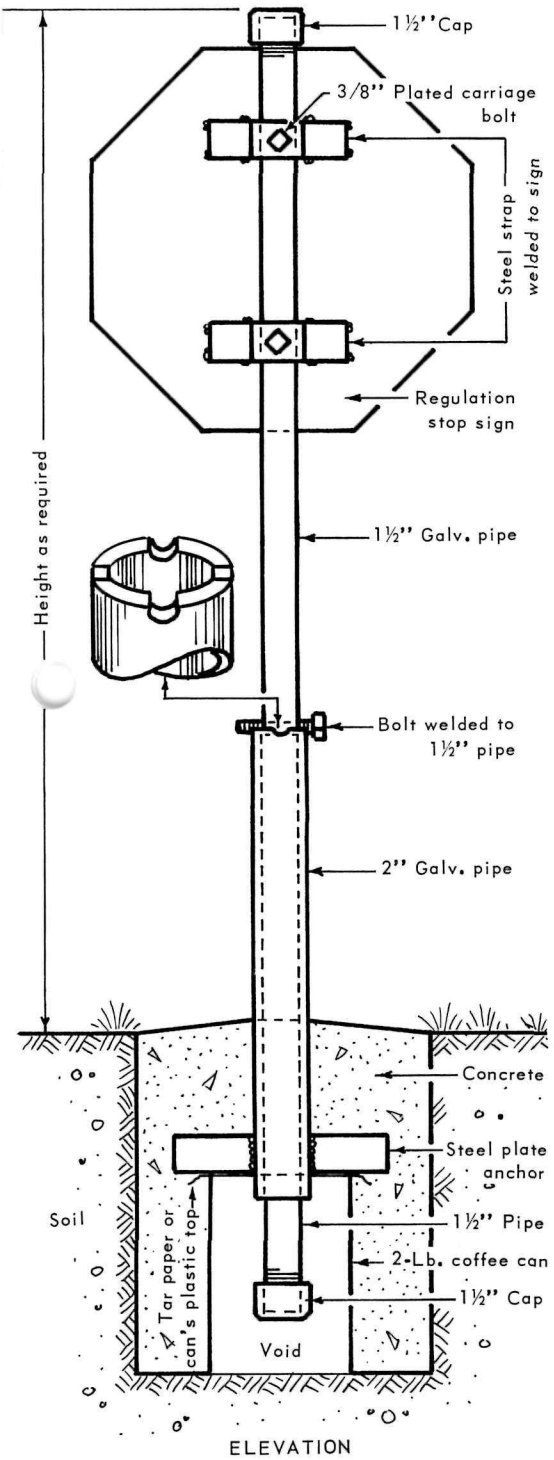

dropping into two of the four notches cut into the top lip of the base support pipe, thus preventing the sign from turning.

SNOW STAKE/POST PULLER

Archimedes said it first: with a lever and a fulcrum he'd move the world! And that's what Walter L. Gracey's snow stake and post puller is all about. Given his well-designed and well built device—which embodies the Greek's lever/fulcrum principle in a portable, easy-to-use form, snow stakes and sign posts come out of the ground with ease, even when that ground is hard and frozen.

Gracey, a vehicle operator at Yellowstone National Park (Wyo.), noticed the man-hours and effort spent in the snow stake/post pulling chore in previous years, and decided to do something about it. That something (see sketch), a base leg mounted on a 6-inch in diameter base plate. Pivoted to the top of the base leg, a 48-inch long handle, from which protrudes an arm to the end of which is fastened a 16-inch long chain with hook.

To pull a stake out of the ground, the chain is wrapped around the stake and leverage exerted by pushing down on the opposite end of the handle, the top of the base leg being the fulcrum for the lever.

Gracey's device provides for varying degrees of leverage by changes in the length of the chain arm. That is, this arm telescopes into the handle and may be lengthened or shortened in two-inch increments ... with the greatest leverage, for the toughest posts, being provided when the chain arm is fully telescoped. For easier, faster jobs, the chain arm can be lengthened, causing the chain to exert upward force on the post relatively faster, but with relatively more force being required on the operator's end.

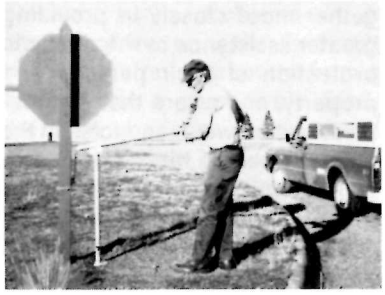

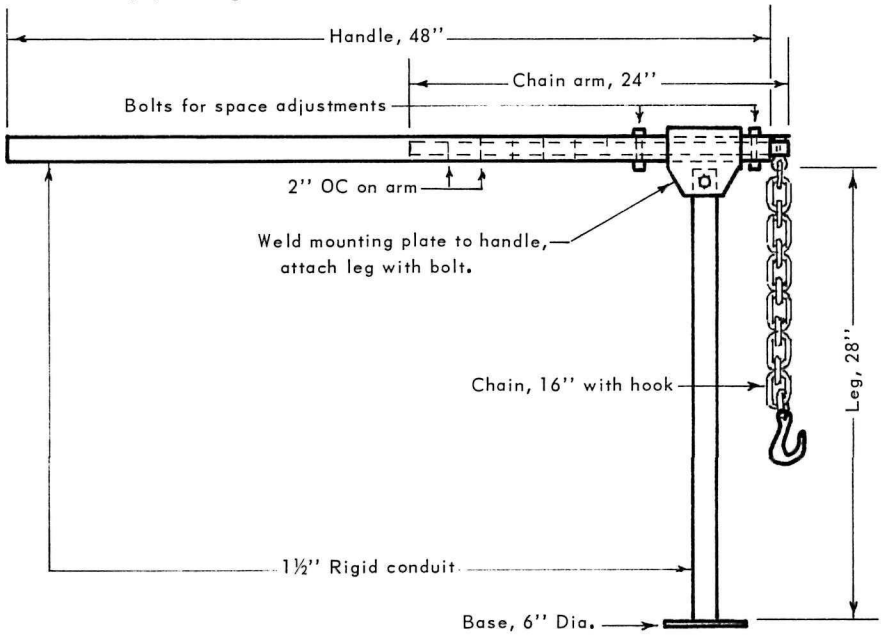

Gracey's post puller has been adopted not only in Yellowstone, but also in another Park Service area in another region. So the innovative thinker and doer has been awarded not one, but *two* cash incentive awards for his device. Archimedes and the Greeks must have had a word for that, too —translated—"well deserved success"!

FREQUENCY SCANNERS LINK RANGERS & LOCAL LAW ENFORCEMENT AGENCIES

Frequency scanners, new on the market within the past few years, may be used by anyone to listen in on police, fire and other short-wave transmissions. No permit or license is needed, and reports have it that they are being used by some persons without any legitimate "need to know".

But now, they're being put to use on the right side of the law, too—specifically along part of the Blue Ridge Parkway, to extend cooperation between park rangers and local law enforcement agencies. Here's how.

Park Ranger Clifford F. Pendry, aware of the need for rangers and other law agencies to work together more closely in providing greater assistance to the public in protection of their persons and property, and aware that communications between agencies in the past has been a hit-or-miss affair, turned to the channel scanner for the solution.

Although the scanner originally must have been conceived of as a *one-way* device, (that is, to listen in on channels transmitting), used in conjunction with transmitters on different frequencies in two different locations, it becomes part of a *two-way* system of communication. Thus, a park ranger, for example, by setting his scanner to the frequency of the local sheriff can receive from him, and then transmit replies to him on his *own* frequency, the sheriff having *his* scanner set to the ranger's transmission. Obviously, the combinations are many. With most scanners tunable to 8 channels, fire, police, ambulance, state highway patrol, and rangers can mesh their cooperative efforts and meet their emergencies even more effectively with no new cost other than that for the scanners themselves.

Pendry was so sure of the merit of his idea that he laid out $180 personally for a scanner and apparently induced two of his fellow rangers to do likewise. Then, in coordination with the local Sheriff's Department, they set up a network and began exchanging information and mutual aid. Within just 3 weeks, all concerned became convinced of the benefits which were to flow from use of the scanners. Pendry explains: "In case of emergencies, or when help is needed at night, these other units" (referring to the Sheriff's patrols) "may be in the immediate area" (Previously, the rangers would have no way of knowing that.)

Continuing, Pendry reports: "Again, with the scanners, any available help can be summoned to assist or interceptions can be made should the party leave the Parkway. These also keep the man on the road alert to felonies, stolen cars, escapees, etc. and hence put the ranger more on the alert, should he encounter any such wanted persons by the State of North Carolina or its counties."

The incentive awards committee thoroughly reviewed Ranger Pendry's suggestion, endorsed it with a recommendation that scanners be acquired for use in those Districts where they work with local law enforcement agencies, and sent a handsome check for his interest and zeal. That's putting the best in technology to work in conjunction with the best man has to offer—his creative thinking.

SECOND LIFE FOR OLD UTILITY BOXES

TO: Editor, Grist

The old military type boxes that used to be carried in pickups are not in demand anymore for pickups. We now have new built-to-fit boxes for our pickups. Don't discard the old utility boxes. As you can see in the picture they still have a chance to be used. Even though the box in the picture is large, it is being used for storage of equipment necessary for the truck it is on. Weld or bolt to the frame of the dump truck and get more use of it.

Yours truly,

Ed Fahey
Bonny Dam State Recreation Area, Colorado

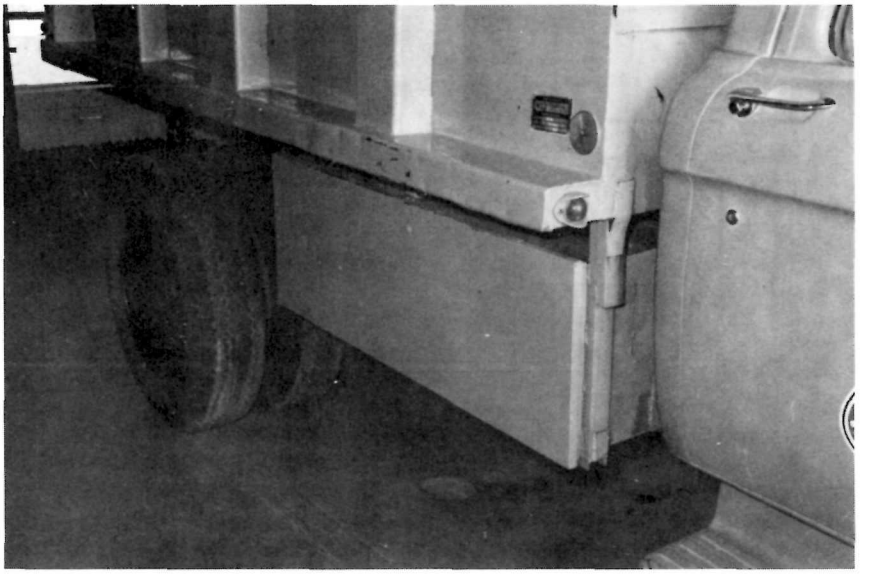

CAMPGROUND MARKERS

Regional Manager Bill Brougham of Colorado's Division of Parks and Outdoor Recreation has come up with a campground marker that does more than just designate tent or trailer areas. Camp site number, individual campground permit display, and campground privileges and regulations are all brought together in a single, sturdy post-mounted marker unit, painted to blend harmoniously with its natural surroundings.

The marker is capped with a miniature peaked roof upon which appears, in white letters, the camp site designation. Sheltered by the cap, on a vertical backing, is mounted under clear plastic a listing of campground regulations, with the approach here being positive, rather than negative. That is, rather than just citing "dont's", these regulations, prominently displayed at the campsite itself, list privileges and responsibilities and thus appeal to the camper's sense of fair play and informed use of public facilities. Finally, at the bottom of the marker is provided space for display of the individual camping permit, for ready availability to rangers or park officials.

ELECTRICAL TESTING OF PIPELINE CONSTRUCTION

Converting the old "ounce of prevention" saw into modern electrical terms is saving money for the government and has earned Millard W. Wilcox, a civil engineer then at the Park Service's Western Service Center in San Francisco, a piece of award money. Here's how.

When pipe lines are built which consist of *dissimilar* metals—aluminum pipe and steel valves, for example—insulating materials such as gaskets, bolt washers and the bolt sleevers must be utilized to prevent electrolysis and consequent corrosion between the two different metals. All of this is obvious, accepted, and standard practice in specifying and constructing such lines. But, contractors and workmen being human, and like all of us, susceptible to lapsing into carelessness at times, mistakes can be made. Through poor workmanship, or omission of insulation altogether, an open circuit (that is, metalic, electrical contact) may result between aluminum pipe and steel valve.

When this happens, and gets covered up by paint and subsequent backfilling of the line, there may be, indeed, almost surely is, trouble later .... corrosion, and leaking or failure. And by then it's too late to come back on the contractor. There's nothing to do but tear it up and re-do the work right.

Obviously, having a government inspector peering over the shoulder of the workmen during each step of installation might prevent such problems, but, equally obvious, is the fact that this would not be practical from a budget nor a manpower standpoint. So what's the answer.

The "ounce of prevention" solution proposed by Wilcox is uncomplicated. Put the contractor on notice that each section of the installation is to be tested electrically, by a government inspector, for contact or open circuit between dissimilar metals *before* any painting is applied or backfill made. (The testing is relatively simple, being accomplished with volt meter and/or ampere meter.)

With the contractor *knowing* that his work is to be tested electrically, a strong psychological influence seems to operate. Through closer supervision and insistence on better workmanship, much of the trouble disappears in advance, leaving to be detected only unavoidable, honest mistakes. Thus the ultimate goal of the California engineer's suggestion is to assure superior construction in the first place and elimination of subsequent pipe line deterioration or failure. Done away with is the always unsatisfactory situation of trying to get the contractor to make good or having the repairs done by others at additional expense to the government.

PORTABLE FLAGPOLE/WIND SOCK

Utah's Division of State Parks Maintenance Supervisor Clyde Gasser constructed two portable items—flag pole and windsock—for the Bonneville National Speed Trials held August 19-25 at Bonneville Salt Flats, Wendover, Utah.

The poles are constructed of standard galvanized, threaded 10-foot lengths of 2-1/2-, 2- and 1-1/2-inch pipe coupled with bell reducers which make it easily broken down for transporting.

Two base concepts were tried, one a 900" x 20-inch truck tire and rim filled with concrete, the other a 2-inch thick by 30" diameter circular metal plate with four separately bolted 5-foot outriggers.

The wind sock and flags not only added an official flair to the occasion, but also were a necessary tool for the racers in determining wind direction and velocity.

They will be stored and available for boating, snowmobiling, park dedications and events of a temporary nature.

. . . NPS SIGN SYSTEM PROGRAM

(Continued from p. 17)

worked with the Bureau of Land Management and the U.S. Forest Service through the Interagency Task Force for Signs and Markings organized by the Federal Highway Administration. This effort revised and expanded the symbol group to the present 77 now in use. This group of 77 symbols was subsequently reviewed by the Director of the National Park Service who issued a Press Release on August 30, 1970, announcing the sign system. All symbols were released for Servicewide use and public information.

There was immediate nationwide acclaim of the symbols and on October 20, 1970, they were published in the Federal Register with the intent of reprinting them 30 days later to make them legal requirements in signing.

On November 24, 1970, the Federal Highway Administration published a notice in the Federal Register that they intended to enforce the Highway Safety Act of 1966, as amended in November 1967, which would require approval of the entire National Park Service sign system and all symbols by the Federal Highway Administration prior to our use on public roadways. Negotiations started between NPS/FHWA with a joint agency task force studying this and several other areas of common interest. A working subcommittee for signs and markings was formed with one member from each of the two agencies who met several times during 1971 and 1972 and submitted final recommendations to the Director of the National Park Service and Administrator of Federal Highway Administration October 18, 1972.

During this period the National Park Service had also issued the National Park Service Sign System Specifications in January 1972 for interim use with construction of all signs to occur in Federal Prison Industries at Atlanta (soon to include Federal Prison Industries of Lompoc, California) where all supports, attachments, plates, and backings are manufactured. There have been three Regional Sign Coordinators meetings in Atlanta to ensure that all coordinators are aware of construction details and techniques. These occurred in spring and summer of 1971, 1972, and 1973.

The final Memorandum of Understanding between the National Park Service and the Federal Highway Administration was signed on August 3 by Director Walker and Administrator Tieman, and has since been issued to all National Park Service Sign System Specifications holders as an amendment until that document can be revised in accordance with the Memorandum of Understanding.

The National Park Service, Bureau of Land Management, and U.S. Forest Service met as a subcommittee of the Interagency Task Force on Signs and Markings in the early fall of 1973 and agreed on several new symbols needed to supplement the group now in use. Each agency was to provide final design of some of the new symbols.

During the fall of 1973 informational seminars were conducted in conjunction with all Regional Superintendent's conferences (or zone meetings) except Western and Pacific Northwest Regions for the purpose of orienting key persons to the requirements of the NPS/FHWA Memorandum of Understanding. Also, the Director issued instructions for dual system measurements converting American standard measurements to metric in six test parks, and these instructions are now being implemented. The original 77 symbols were republished in the Federal Register on November 15, 1973, and may now be legally enforced when violations occur.

The necessary revision of the National Park Service Sign System Specifications has been started. Requests have been received from Regions for even more symbols than those presently being considered by the Interagency Task Force Subcommittee. At the end of calendar year 1973 21 percent of the signs for all areas had been ordered and about 15 percent had been installed. Interest still appears to be very high from outside the Service on our uniform system of signs and symbols.

SPRINKLER CART

Ken Persenaire of the Shoshone Recreation District in Cody, Wyoming reports that this cart, made up from 2 old bicycle wheels, provides room for 28 sprinkler heads. Developed by Cody Parks Department, four such carts are now in service.

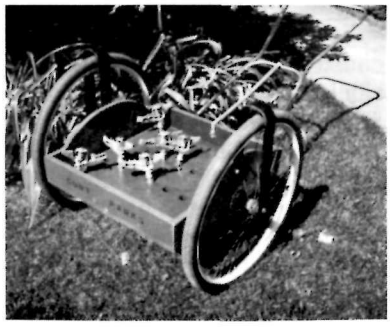

THE SURVIVAL KIT

By Jim Burnett