Garden Grove, California, Recreation and Parks Department offers here a unique piece of playground equipment—one which could hardly fail to enthrall a youngster.

Called a "Space Spin" rotating swing, it offers the child an unusual experience through the clever use of a few materials readily at hand.

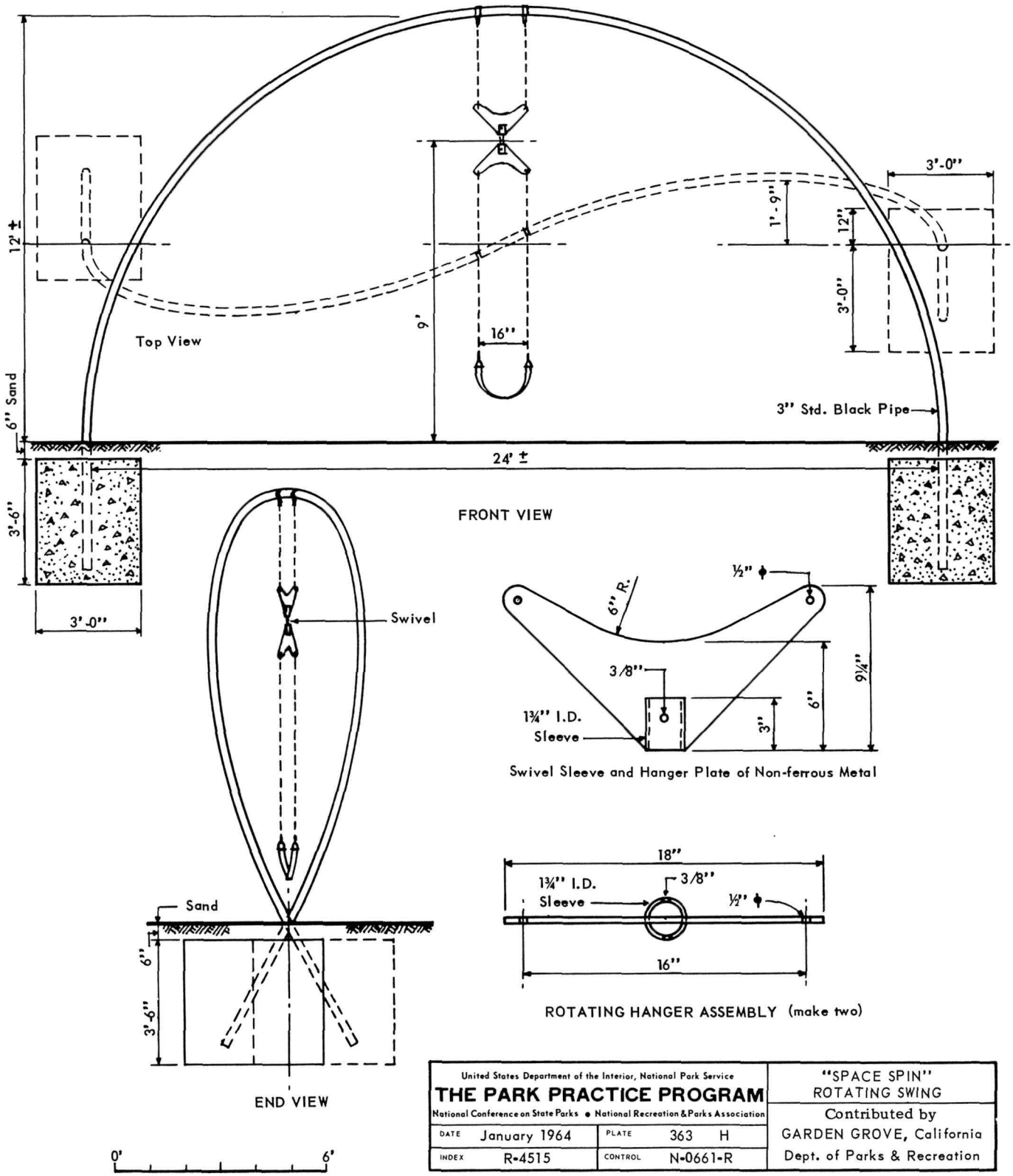

United States Department of the Interior, National Park Service

THE PARK PRACTICE PROGRAM

National Conference on State Parks • National Recreation & Parks Association

DATE	January 1964	PLATE	363 H
INDEX	R-4515	CONTROL	N-0661-R

"SPACE SPIN" ROTATING SWING

Contributed by GARDEN GROVE, California Dept. of Parks & Recreation