Each box is built to hold 20 5-pound plastic sandbags tied with "twistem."

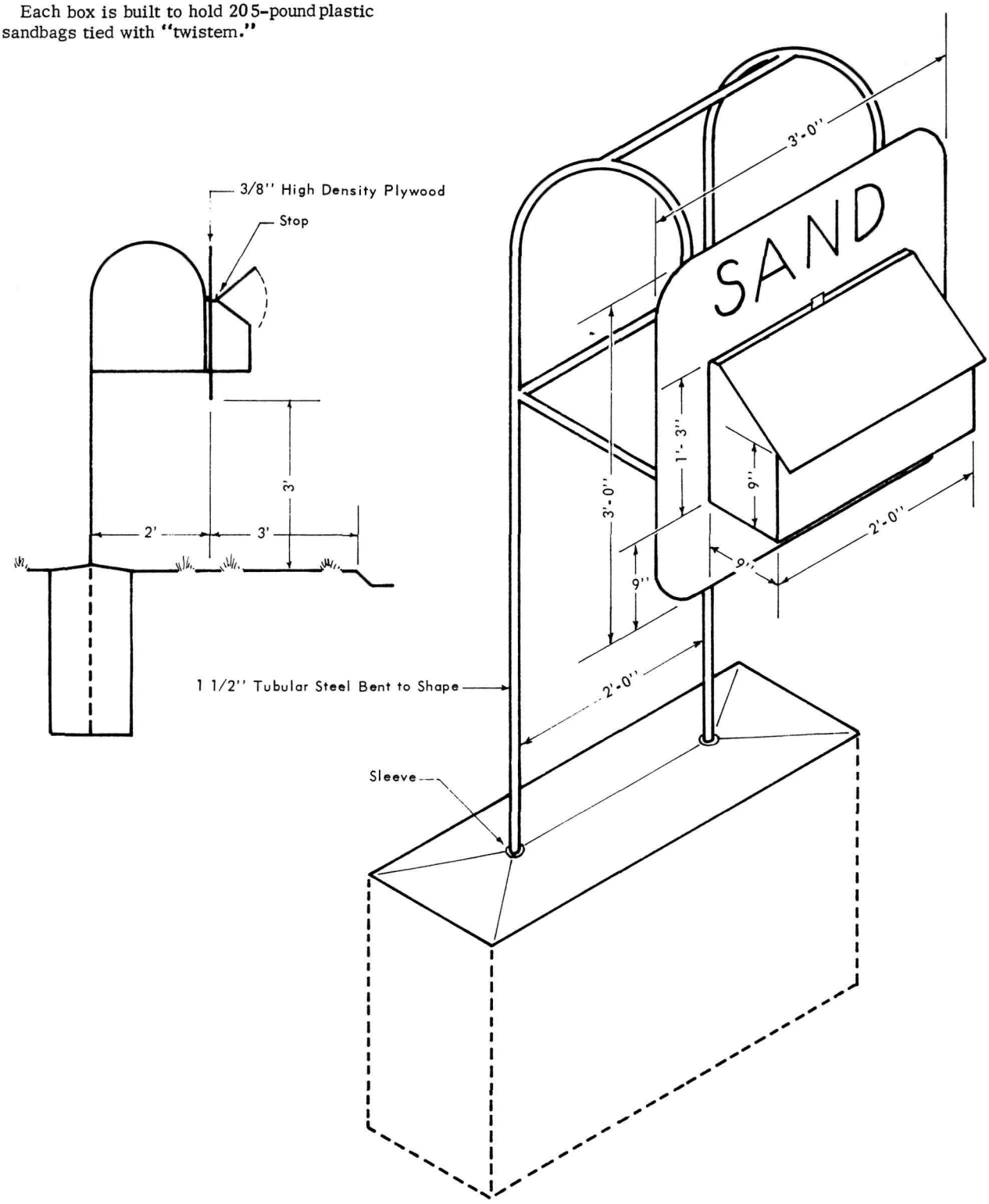

United States Department of the Interior, National Park Service **THE PARK PRACTICE PROGRAM** National Conference on State Parks • National Recreation & Parks Association			EMERGENCY SAND BOX
DATE December 1970	PLATE 756 B		Contributed by EDWARD WILLARD NCP, NPS, USDI
INDEX P-2512	CONTROL S-1262-P		