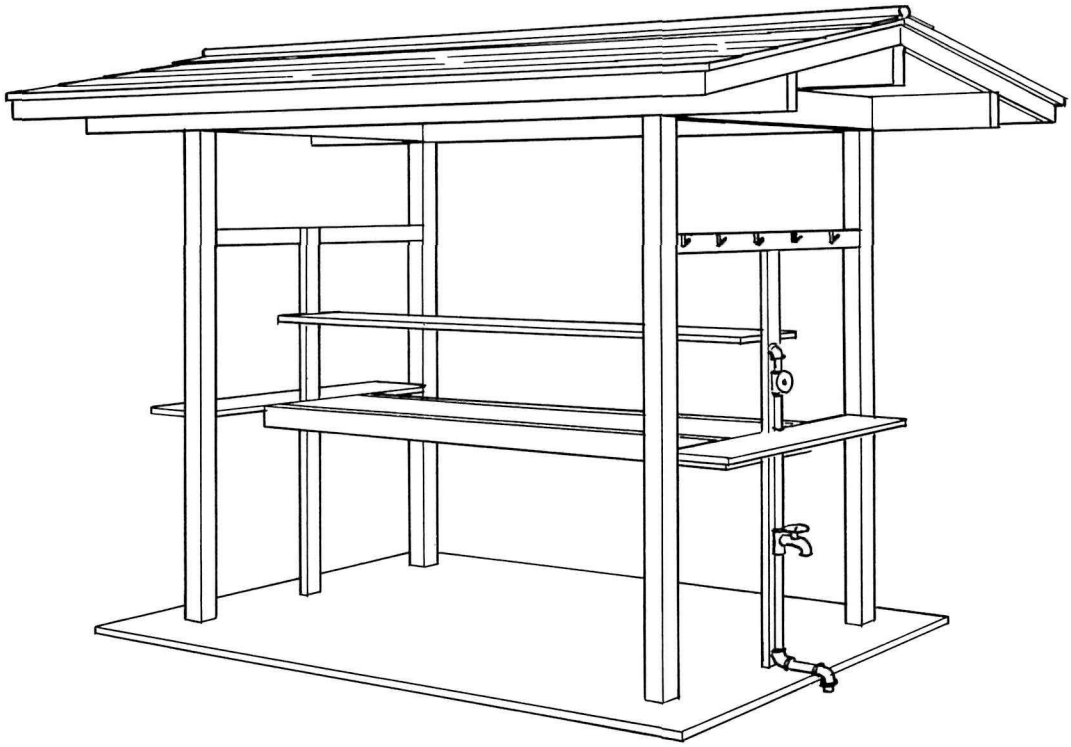

Designed and used by the Boy Scouts of America in camps, this facility could find ready acceptability in public campground areas as well.

Of simple design, washstands of this open type are easy to maintain; there is less likelihood of continuous dampness and mildew when essential facilities such as this are open to the sun.

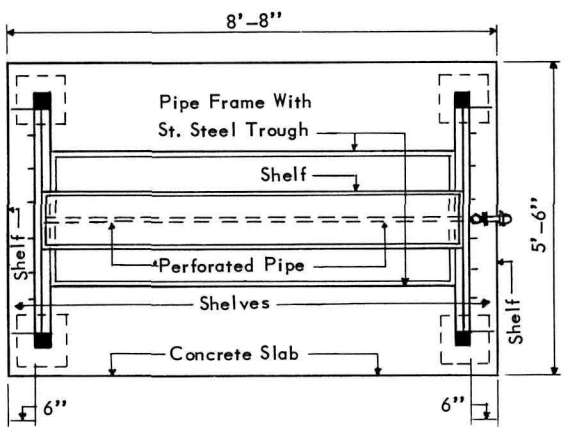

PLAN

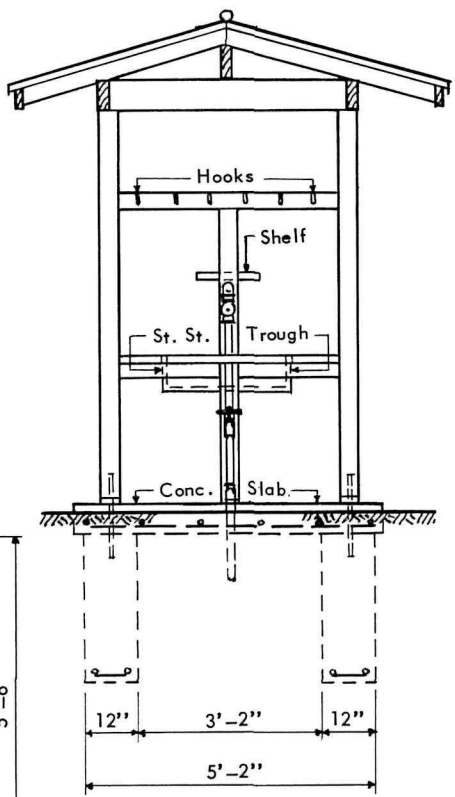

END ELEVATION

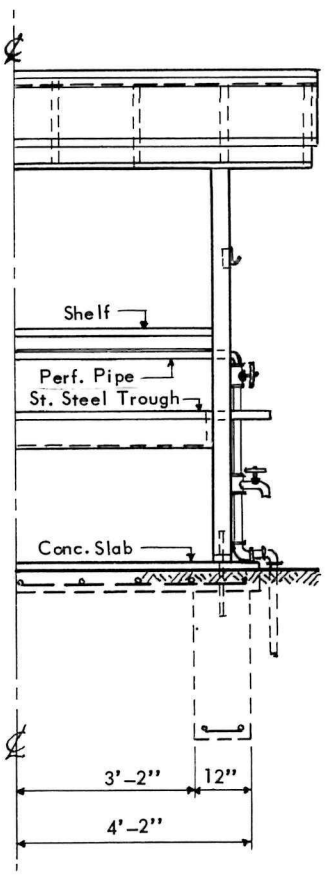

HALF SIDE ELEVATION

0' 3' 6'

The National Conference on State Parks in cooperation with The National Park Service				WASHSTAND, TROOP
date	March 1962	plate	248 H	Contributed by BOY SCOUTS OF AMERICA
index	O–5303	control	N–0543–O	